NOTES:

1. ELEMENTS CROSS THE ELECTRON BEAM AS READ (FROM LEFT-TO-RIGHT)

2. MACHINE CENTER IS 400.0948 METERS UPSTREAM OF "HALL CENTER"

3. CONTENTS:
   PAGE 1: COMPONENT POSITIONING FOR REFERENCE BY COUNTING-ROOM & MCC OPERATORS
   PAGES 2 & 3: COMPONENT IDENTIFICATION FOR INSTALLATION BY TECHNICAL STAFF

4. BEAM-TUBE IDENTIFICATION:
   FORMAT: A - B - C, L
   A = UPSTREAM FLANGE SIZE
   B = TUBE OD
   C = DOWNSTREAM FLANGE SIZE
   D = LENGTH
   CONFLAT FLANGES UNLESS SPECIFIED

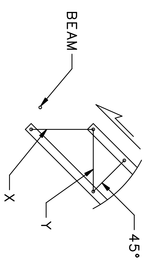

FOR CONTINUATION SEE DRAWING NO. 28405-0034

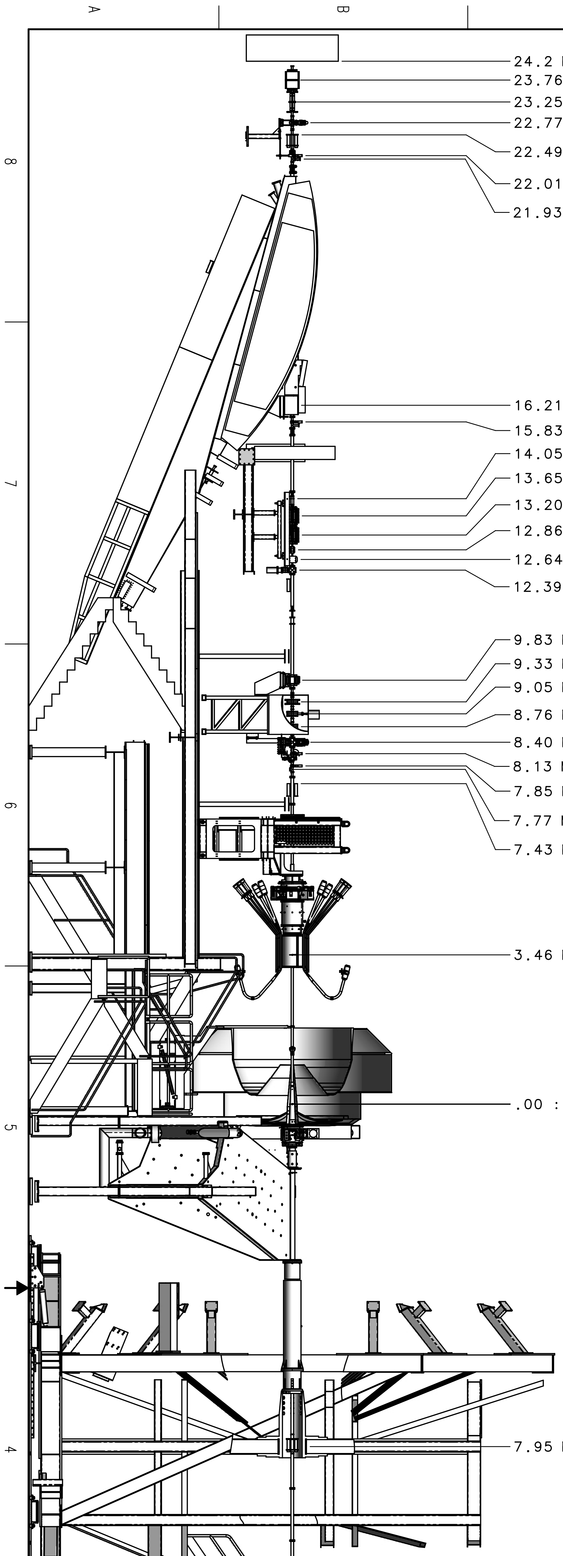

24.2 M : SHIELD WALL : UPSTREAM ALCOVE
23.76 M : 2C24 RASTER MAGNET : MRB2C03H
23.25 M : 2C24 RASTER MAGNET : MRB2C03V
22.77 M : 2C24 TAGGER HARP : IHA2C24 : 3-WIRE, 45°,Y,X [1]
22.49 M : 2X COUNTERS, UPSTREAM
22.01 M : 2C24 VALVE : VBV2C24A
21.93 M : 2C24A PUMP-SET : VTP2C24A
16.21 M : COLLIMATOR: EMPTY,20mm,NO HOLE,12mm [1]
15.83 M : 2H00 VALVE : VBV2H00
14.05 M : 2H00 BPM : IPM2H00
13.65 M : 2H00 QA MAGNET : MQA2H00
13.20 M : 2H00 QA MAGNET : MQA2H00A
12.86 M : 2H00 BD MAGNET : MBD2H00H
12.64 M : 2H00 BD MAGNET : MBD2H00V
12.39 M : 2H00 PUMP-SET : VTP2H00
9.83 M : 2H01 QB MAGNET : MQA2H01
9.33 M : 2H01 BPM : IPM2H01
9.05 M : 2H01 BPM : IPM2H01V
8.76 M : 2H01 BPM : IPM2H01H
8.40 M : 2H01 HARP: 3-WIRE, X,Y,45° [1]
8.13 M : VALVE : VBF2H01A
7.85 M : VALVE : VBV2H01A
7.77 M : 2H01A PUMP-SET : VTP2H01A
7.43 M : 4X COUNTERS, MIDSTREAM
3.46 M : SOLENOID CENTER
.00 : HALL CENTER
7.95 M : 4X COUNTERS, DOWNSTREAM
13.39 M : 2H02 BD MAGNET : MBD2H02H
13.62 M : 2H02 BD MAGNET : MBD2H02V
13.84 M : 2H02 BPM
14.01 M : 2H02 HPS COLLIMATOR : WIRE, 3-SLOTS (2.82mm, 2.25mm, 3.94mm) [1]
14.40 M : 2H02 VALVE : VBV2H02
14.64 M : 2H02 CLEANUP COLLIMATOR
14.82 M : 2H02A HARP: 3-WIRE, X,Y,45° [1]
15.45 M : FRASCATI MAGNET 01
16.12 M : 2X HPS COUNTERS, UPSTREAM
17.09 M : HPS TARGET (W 4um, W 8um, C 250um, CH2 750um)
17.63 M : HPS DIPOLE MAGNET
18.29 M : HODOSCOPE
18.57 M : HPS CALORIMETER
18.91 M : 2X HPS COUNTERS, DOWNSTREAM
19.81 M : FRASCATI MAGNET 02
20.76 M : 2H02 PUMP-SET : VTP2H02
21.0 M : SHIELD WALL : DOWNSTREAM ALCOVE
23.5 M : MAGNET (DECOMISSIONED)
25.2 M : HPS PHOTON DUMP
26.2 M : DOWNSTREAM VIEWER
28.1 M : SHIELD WALL : FARADAY CUP
29.8 M : RETRACTABLE BEAM STOPPER
31.2 M : FARADAY CUP

ZONE	REV	REVISION HISTORY DESCRIPTION	DATE/REVISER
ALL	A	FORMAT UPDATED: NOTES ADDED TO PAGE 1 DIMENSIONS & COMPONENT TAGS ADDED TO PAGE 2	2020/10/01 C.WIGGINS

EACH SHEET OF MULTI-SHEET DRAWINGS SHALL ALWAYS HAVE THE SAME REVISION LEVEL.

DUAL & TOL PER ASME Y14.5 2009
UNLESS OTHERWISE SPECIFIED DIMENSIONS ARE IN INCHES
FRACTIONS ± 1/8 DECIMAL .XX ± .01 .XXX ± .005 ANGLES ± .50°
THIRD ANGLE PROJECTION

MATERIAL: SEE PARTS LIST

FINISH SURFACES 125 UNLESS OTHERWISE NOTED
DEBURR & BREAK ALL SHARP EDGES

DO NOT SCALE DRAWING

DRAWN: C.L.WIGGINS DATE: 2019/06/01

United States Department of Energy
Jefferson Lab
Thomas Jefferson National Accelerator Facility
Newport News Virginia

HALL B
02 BEAM LINE
00 INSTALLATION TEMPLATE
BEAMLINE ASSY, HPS 2019

SIZE: B DWG. NO. B11006-02-00-0001 REV: A
SCALE: N/A USE IN ASSY NO.: N/A SHEET 1 OF 3

Approved: 07/09/2021, E-Sign ID: -4256133; Signed By: Approver 1: B. Miller; Checker: S. Stepanyan; DCG: T. Fuell

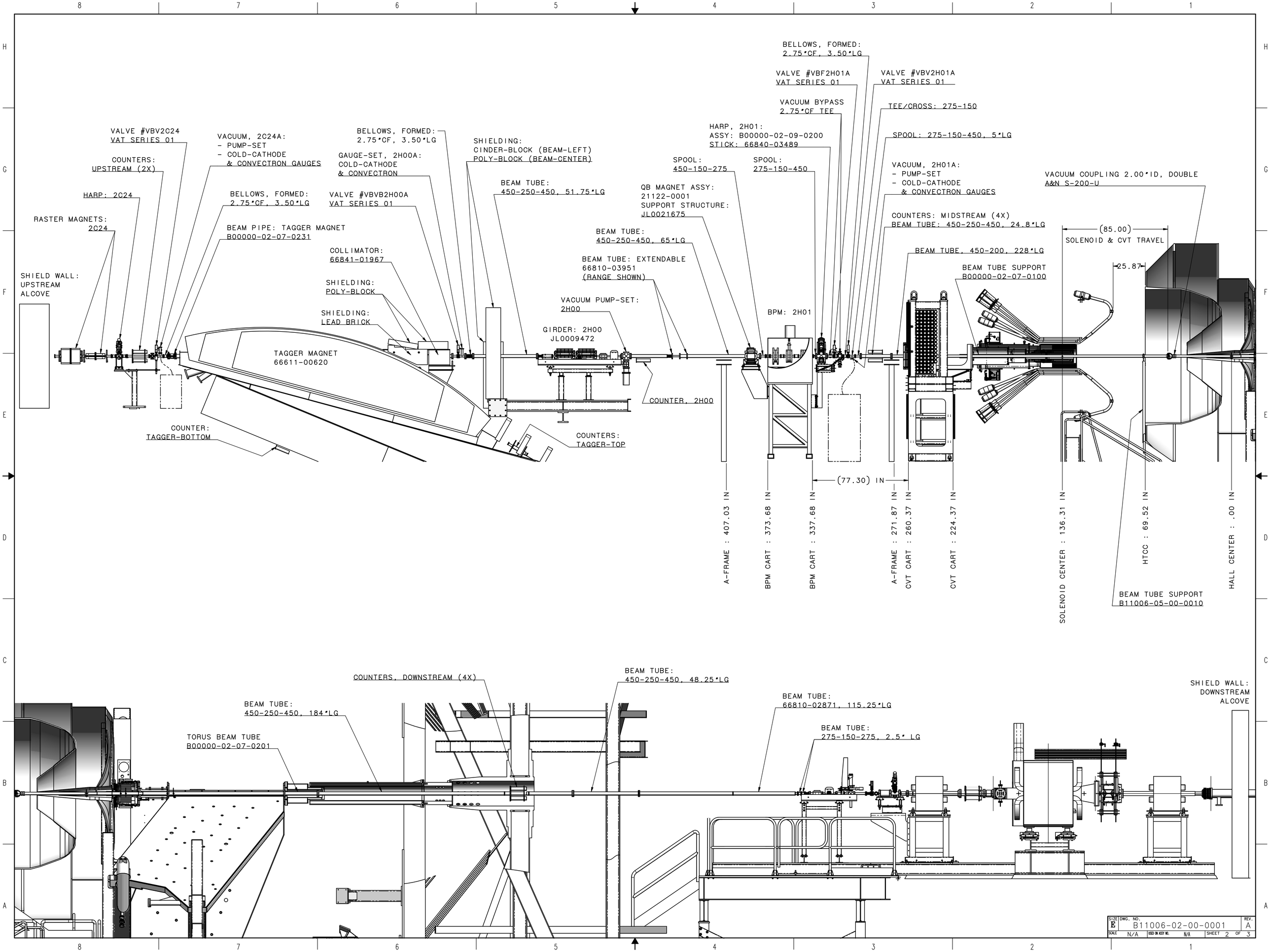

SIZE	DWG. NO.	REV.
E	B11006-02-00-0001	A
SCALE N/A	USED ON ASSY NO. N/A	SHEET 2 OF 3

Approved: 07/09/2021; E-Sign ID: 426513; Signed By: Approver 1: B. Miller; Checker: S. Stepanyan; DCG: T. Fuell

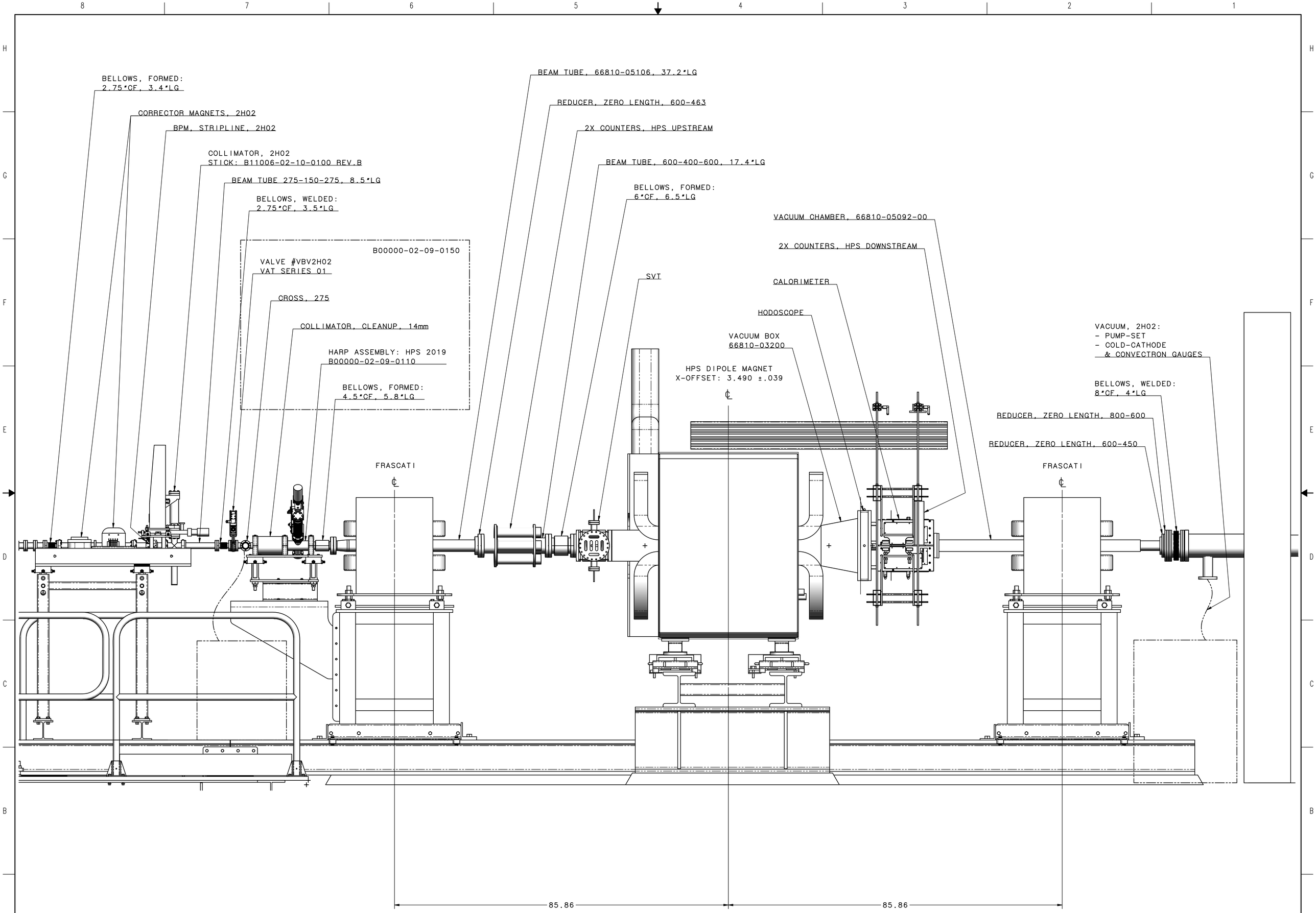

SIZE	DWG. NO.	REV.
E	B11006-02-00-0001	A
SCALE N/A	USED ON ASSY NO. N/A	SHEET 3 OF 3

Approved: 07/09/2021; E-Sign ID: 426513; Signed By: Approver 1: B. Miller; Checker: S. Stepanyan; DCG: T. Fuell