REVISION HISTORY			
ZONE	REV	DESCRIPTION	DATE/REVISER

NOTES

1. ELEMENTS CROSS THE ELECTRON BEAM AS READ (FROM LEFT-TO-RIGHT)

2. MACHINE CENTER IS 400.0948 METERS UPSTREAM OF "HALL CENTER"

3. CONTENTS:
   - PAGE 1: COMPONENT POSITIONING FOR REFERENCE BY COUNTING-ROOM & MCC OPERATORS
   - PAGE 2: COMPONENT POSITIONING FOR REFERENCE BY COUNTING-ROOM & MCC OPERATORS CONT'D
   - PAGE 3: COMPONENT IDENTIFICATION FOR INSTALLATION BY TECHNICAL STAFF
   - PAGE 4: BEAMLINE SHIELDING
   - PAGE 5: IDENTIFICATION OF MATERIALS IN THE BEAM

4. BEAM-TUBE IDENTIFICATION:
   - FORMAT: A - B - C, L
   - A = UPSTREAM FLANGE SIZE
   - B = TUBE OD
   - C = DOWNSTREAM FLANGE SIZE
   - L = LENGTH
   - CONFLAT FLANGES UNLESS SPECIFIED

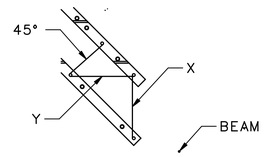

SECTION C-C
2H01, 3-WIRE X,Y,45°

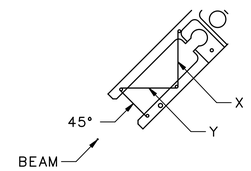

SECTION B-B
2H00, 3-WIRE,45°,Y,X

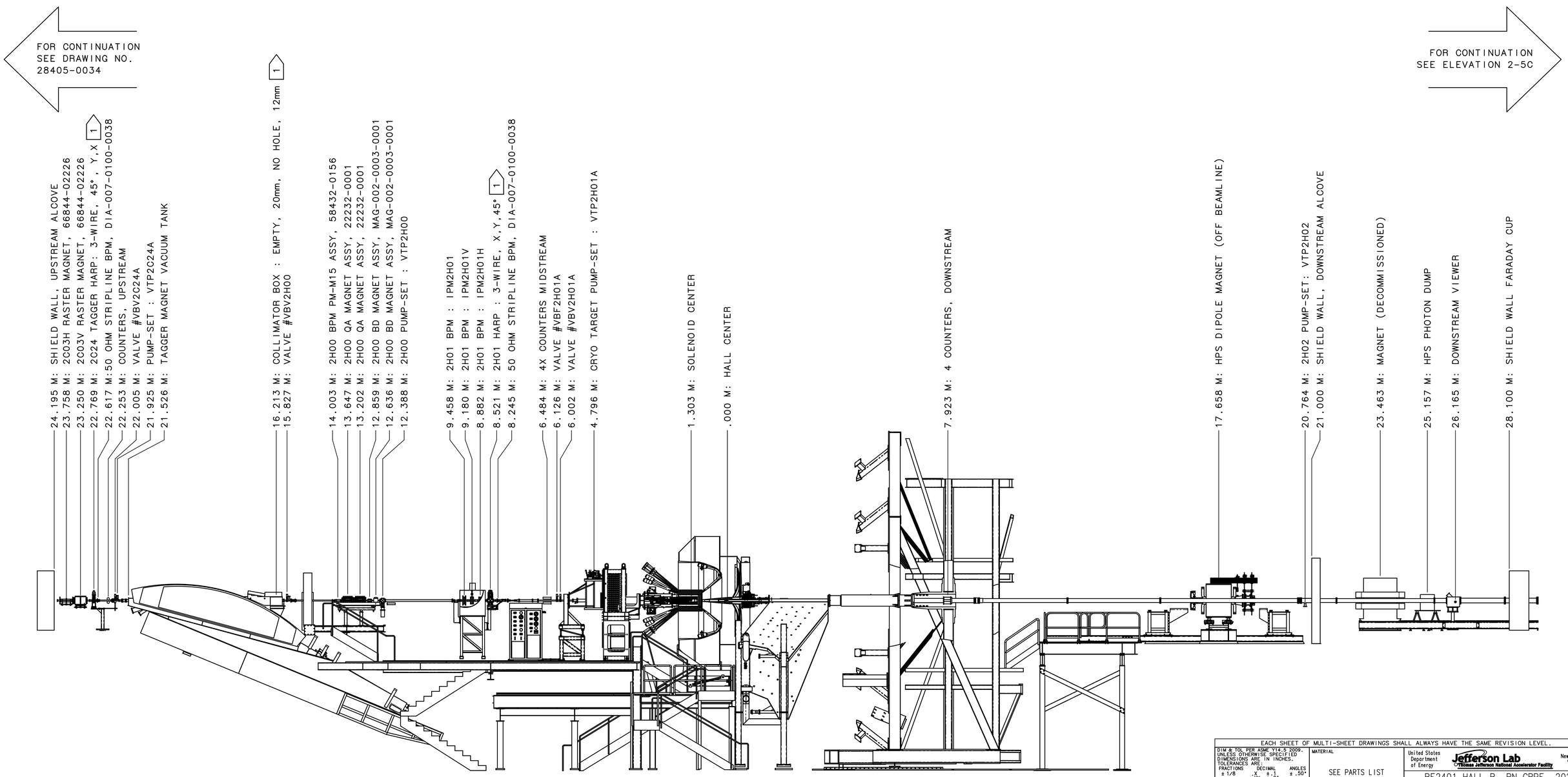

ELEVATION 1-5A
UPSTREAM ALCOVE TO DOWNSTREAM ALCOVE
(SOLID TARGET CONFIG., 2CM CELL SHOWN)

EACH SHEET OF MULTI-SHEET DRAWINGS SHALL ALWAYS HAVE THE SAME REVISION LEVEL.

DIM & TOL PER ASME Y14.5 2009.
UNLESS OTHERWISE SPECIFIED
DIMENSIONS ARE IN INCHES.
TOLERANCES ARE:
FRACTIONS ± 1/8 — DECIMAL .X ±.1, .XX ±.01, .XXX ±.005 — ANGLES ±.50°

THIRD ANGLE PROJECTION

MATERIAL: SEE PARTS LIST

FINISH MACHINED SURFACES 125 UNLESS OTHERWISE NOTED
DEBURR & BREAK ALL SHARP EDGES

DO NOT SCALE DRAWING

DRAWN: CHRIS GUTHRIE — DATE: 11/2/2023

United States Department of Energy
Jefferson Lab — Thomas Jefferson National Accelerator Facility — Newport News Virginia

BE2401 HALL B, RN GRPE, 2024
02 BEAM LINE
00 INSTALLATION TEMPLATE
0000 BEAMLINE ASSEMBLY

SIZE: E — DWG. NO.: BE2401-02-00-0000 — REV.: –
SCALE: N/A — USED ON ASSY NO.: N/A — SHEET 1 OF 5

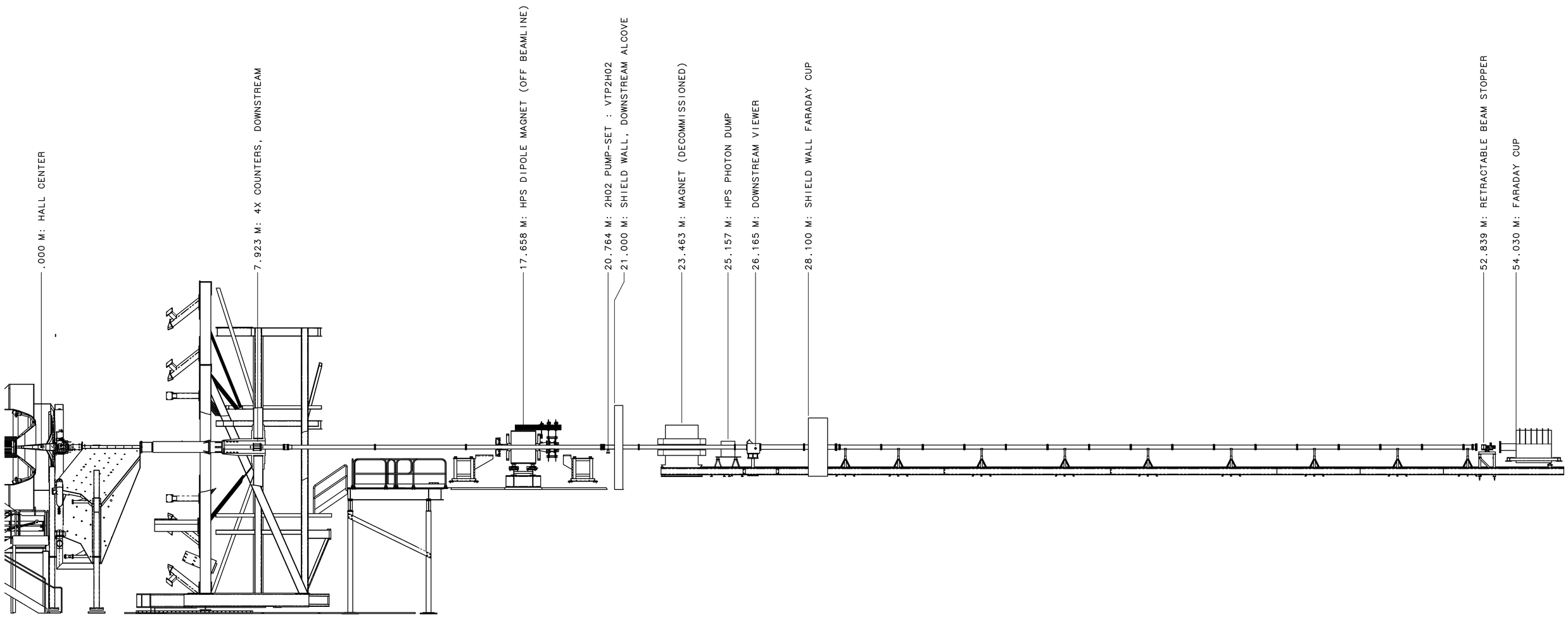

ELEVATION 2-5C

HALL CENTER TO FARADAY CUP

SIZE	DWG. NO.	REV.
E	BE2401-02-00-0000	–
SCALE N/A	USED ON ASSY NO. N/A	SHEET 2 OF 5

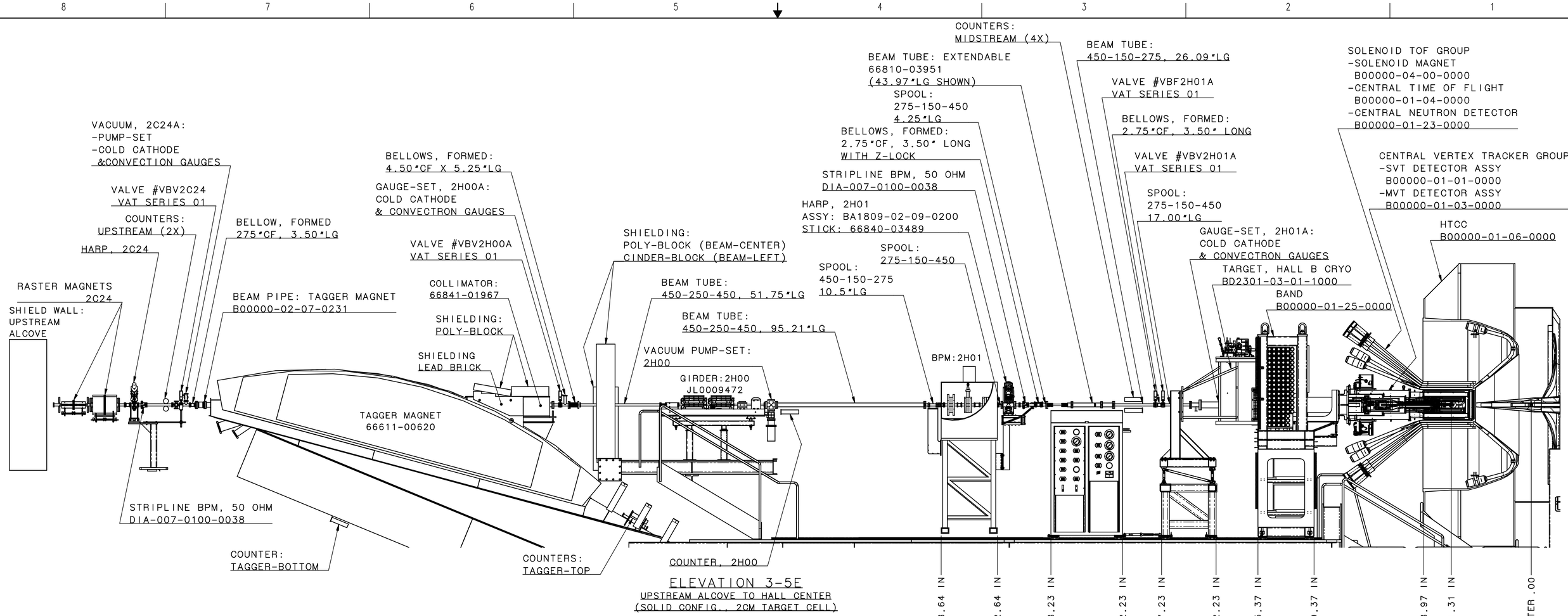

ELEVATION 3-5E

UPSTREAM ALCOVE TO HALL CENTER
(SOLID CONFIG., 2CM TARGET CELL)

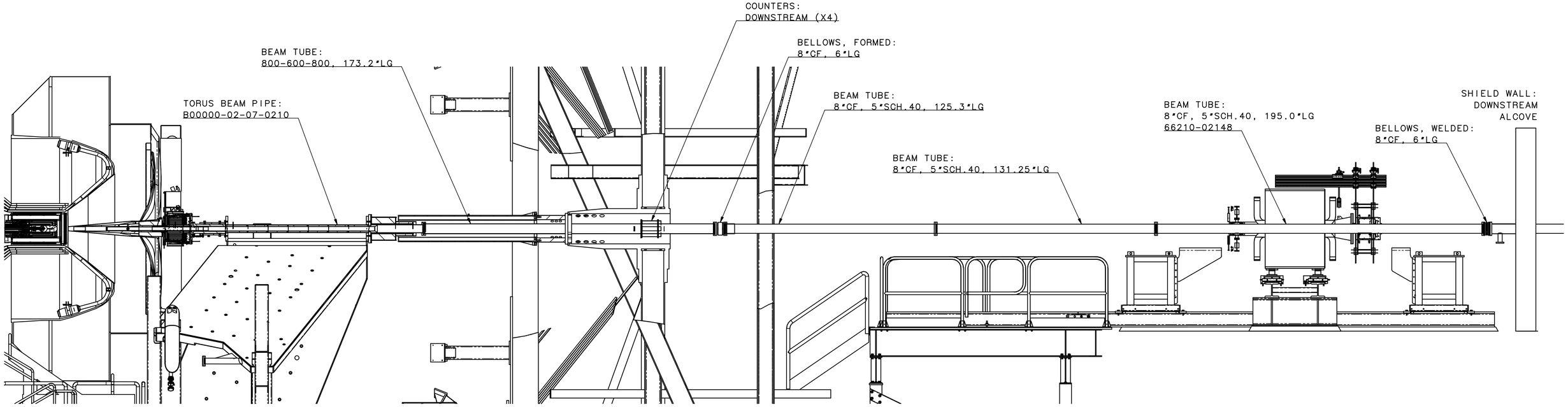

ELEVATION 3-5A

HALL CENTER TO DOWNSTREAM ALCOVE

SIZE	DWG. NO.	REV.
E	BE2401-02-00-0000	–
SCALE N/A	USED ON ASSY NO. N/A	SHEET 3 OF 5

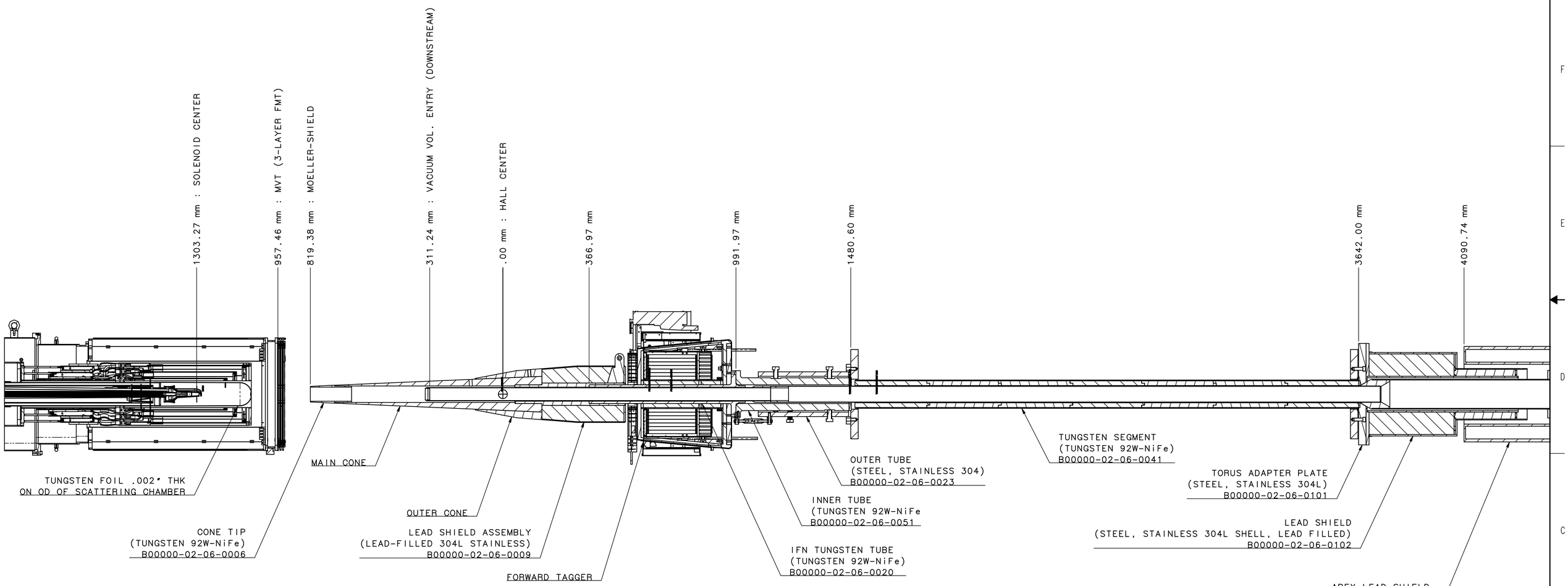

SECTION 4-5C

TARGET CELL TO APEX LEAD SHIELD

(FT-OFF AND 3 LAYER FMT CONFIG.,2CM TARGET CELL SHOWN)

SIZE	DWG. NO.	REV.
E	BE2401-02-00-0000	–
SCALE N/A	USED ON ASSY NO. N/A	SHEET 4 OF 5

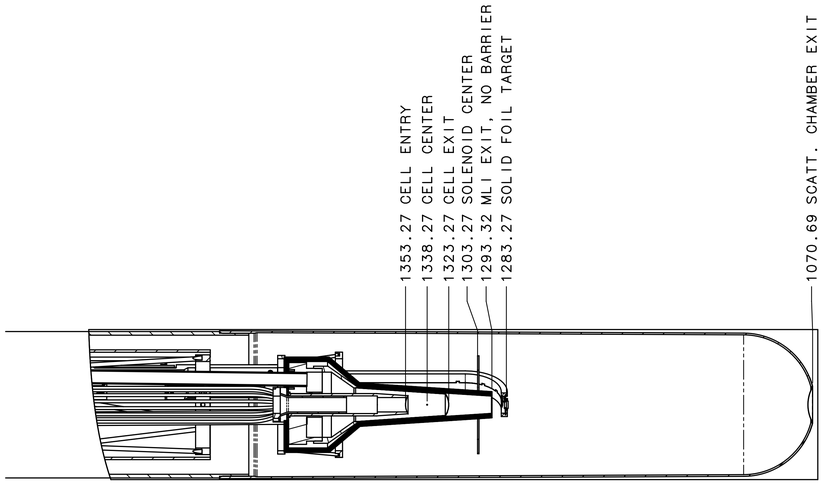

ELEVATION 5-7F
TARGET CELL TO HALL CENTER
(3CM TARGET CELL CONFIG.)

TABLE -A-
MATERIALS IN THE BEAM LINE 3CM TARGET CELL CONFIGURATION

ITEM	DRAWING NO.	MATERIAL	THICKNESS
TARGET CELL ENTRY	BD2301-03-01-0100	ALUMINUM	30um
TARGET CELL EXIT		ALUMINUM	30um
SOLID FOIL 01	TBD	CARBON	2220 um
SOLID FOIL 02	TBD	ALUMINUM	1820 um
SOLID FOIL 03	TBD	COPPER	360 um
SOLID FOIL 04	TBD	TIN	300 um
SOLID FOIL 05	TBD	LEAD	140 um
SCATTERING CHAMBER EXIT	B00000-03-01-0300	ALUMINUM	75um
VACUUM VOL. ENTRY (DOWNSTREAM)	B00000-02-07-0210	ALUMINUM	75um

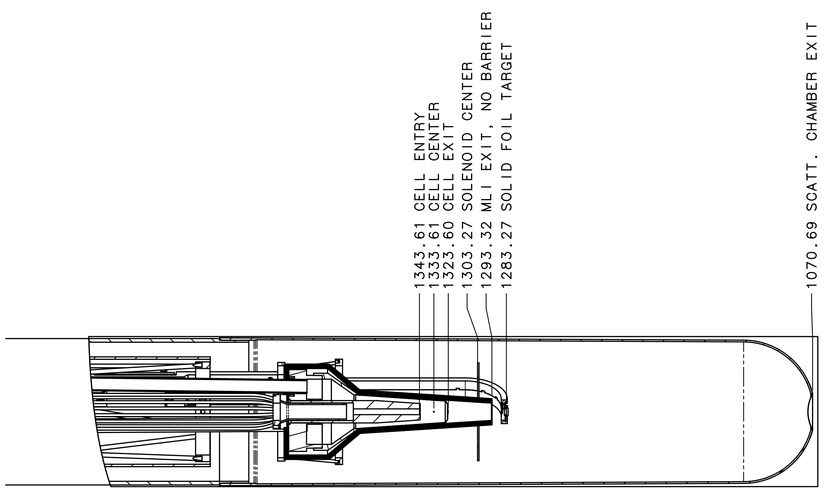

ELEVATION 5-7C
TARGET CELL TO HALL CENTER
(2CM TARGET CELL CONFIG.)

TABLE -B-
MATERIALS IN THE BEAM LINE 2CM TARGET CELL CONFIGURATION

ITEM	DRAWING NO.	MATERIAL	THICKNESS
TARGET CELL ENTRY	BD2301-03-01-0100	ALUMINUM	30um
TARGET CELL EXIT		ALUMINUM	30um
SOLID FOIL 01	TBD	CARBON	1480 um
SOLID FOIL 02	TBD	ALUMINUM	1200 um
SOLID FOIL 03	TBD	COPPER	360 um
SOLID FOIL 04	TBD	TIN	300 um
SOLID FOIL 05	TBD	LEAD	140 um
SCATTERING CHAMBER EXIT	B00000-03-01-0300	ALUMINUM	75um
VACUUM VOL. ENTRY (DOWNSTREAM)	B00000-02-07-0210	ALUMINUM	75um

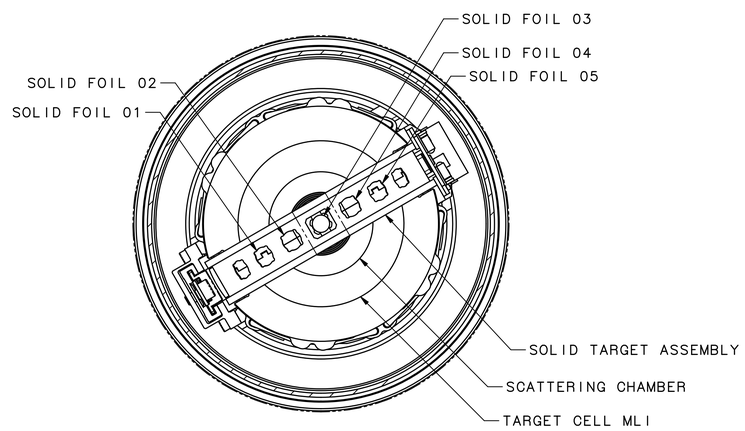

SECTION A-A

SIZE	DWG. NO.	REV.
E	BE2401-02-00-0000	-
SCALE N/A	USED ON ASSY NO. N/A	SHEET 5 OF 5