GTS 300 kV p-gun CST microwave studio simulations

Gabriel Palacios

gpala001@odu.edu

06/16/18

Summary

- Solidworks
  - Geometry modifications
- CST
  - Details of simulation
  - Electric field and potential plots
- Additional slides

Solidworks geometry modifications:

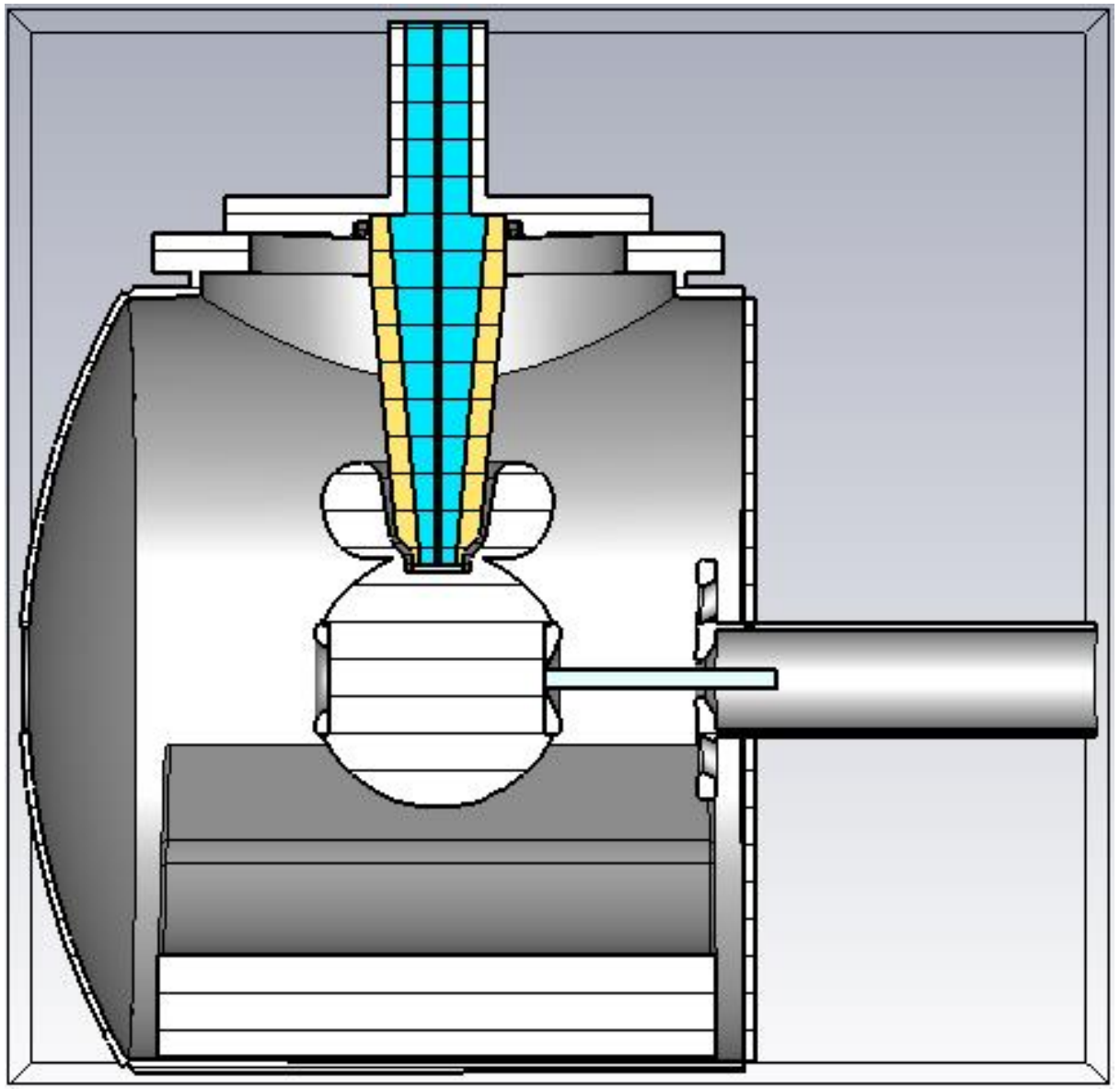

Solidworks geometry modifications:

As Fay suggested, it was better to separate the model into pieces. Specially the small parts near the Kovar ring, the cathode triple-point junction and added a cylinder for the field maps at the cathode-anode gap.

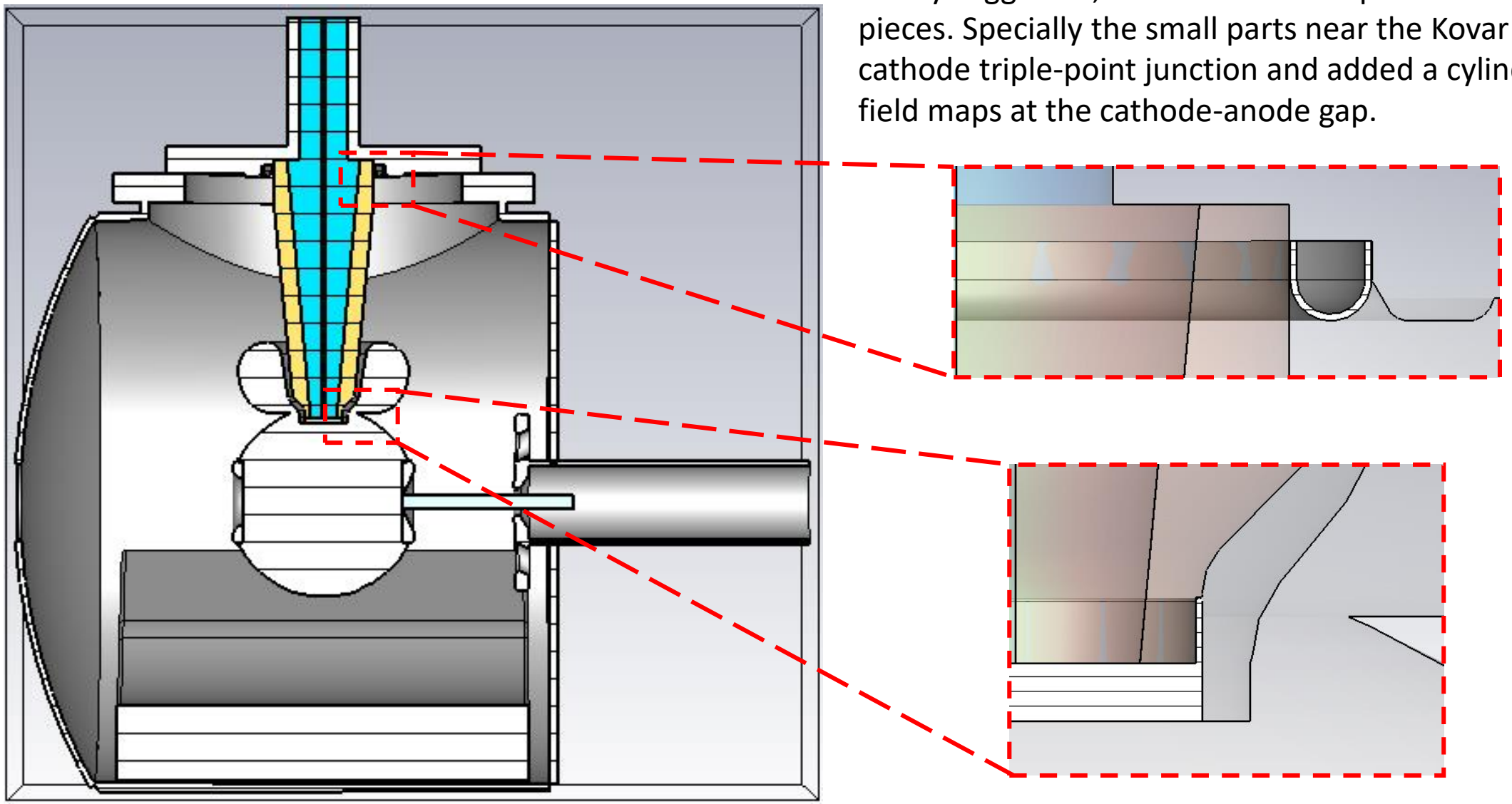

Solidworks geometry modifications:

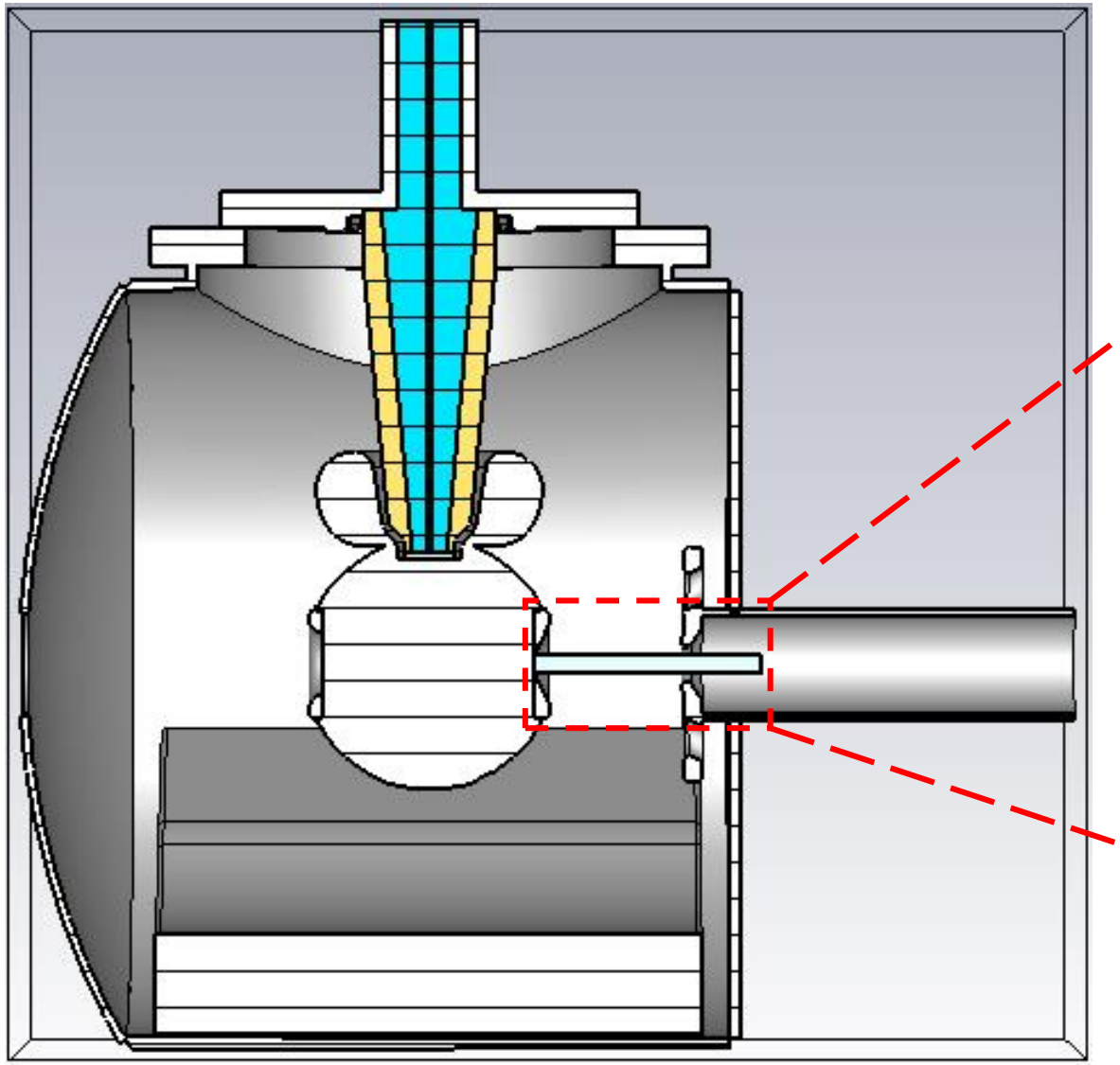

…and added a cylinder for very fine meshing to obtain very fine field maps at the cathode-anode gap.

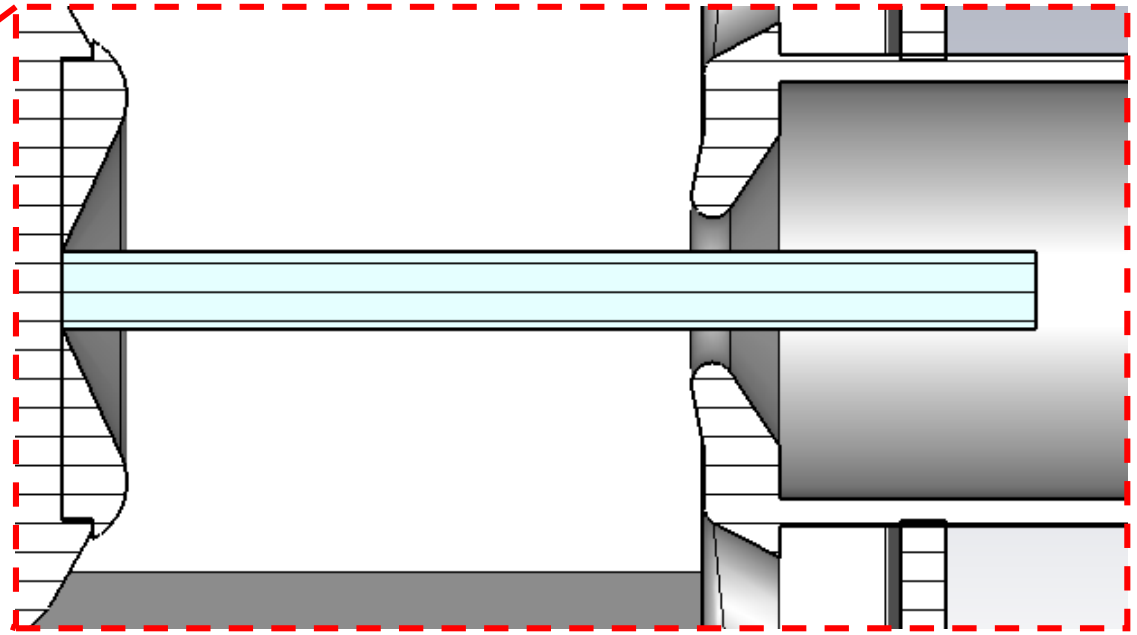

CST materials: PEC

- Steel for all metal components with Perfect electric conductor (PEC). Since this is a preset we don't need to define anything. Also, Thermal, Mechanical and Density properties are not included in the calculation.

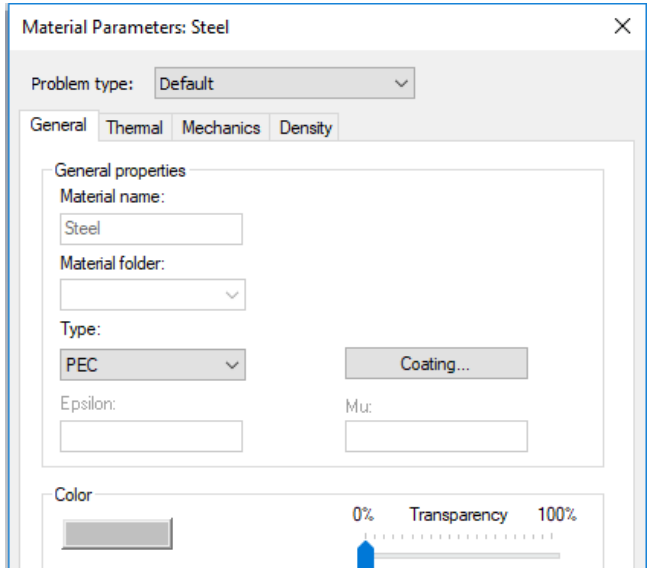

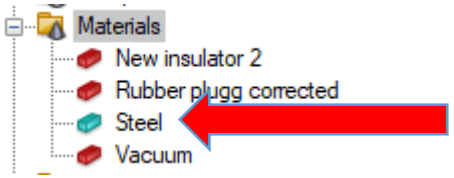

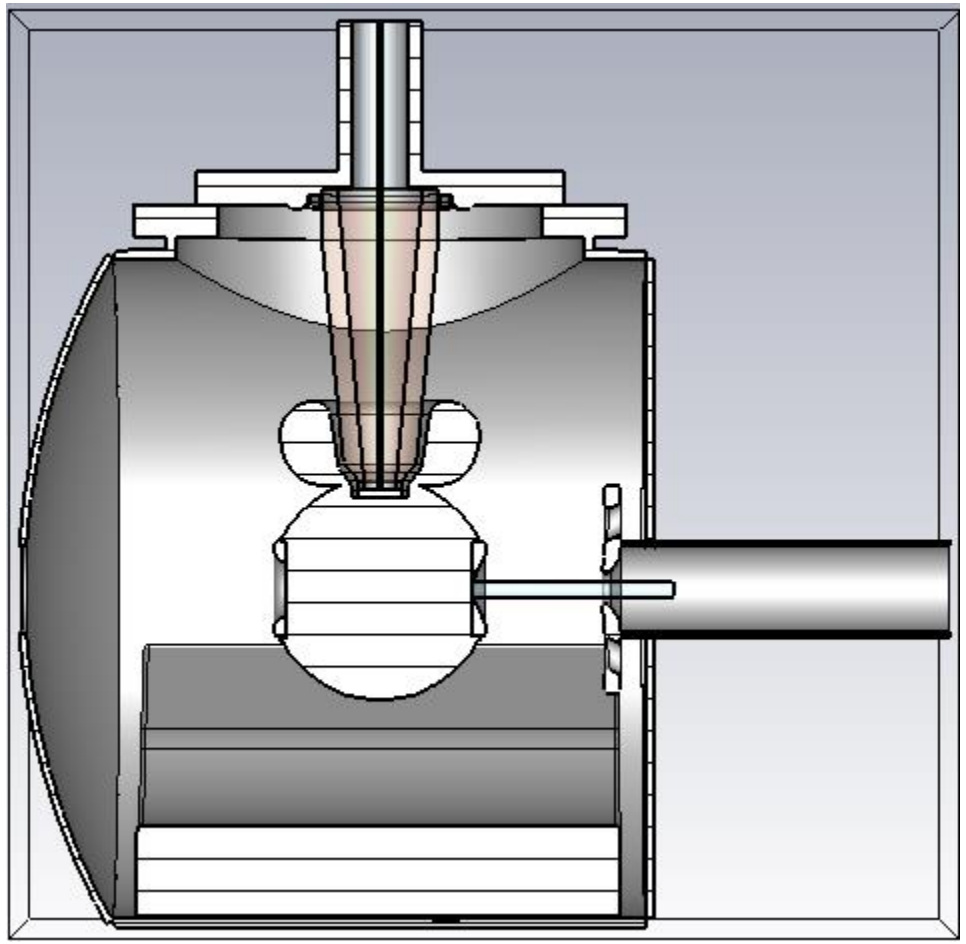

CST materials: Insulator

- For **black** alumina I used the same parameters as in COMSOL.
- ε=8.4
- σ=2E-12 [S/m]

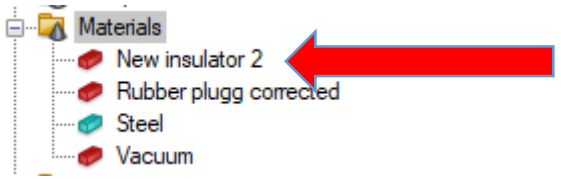

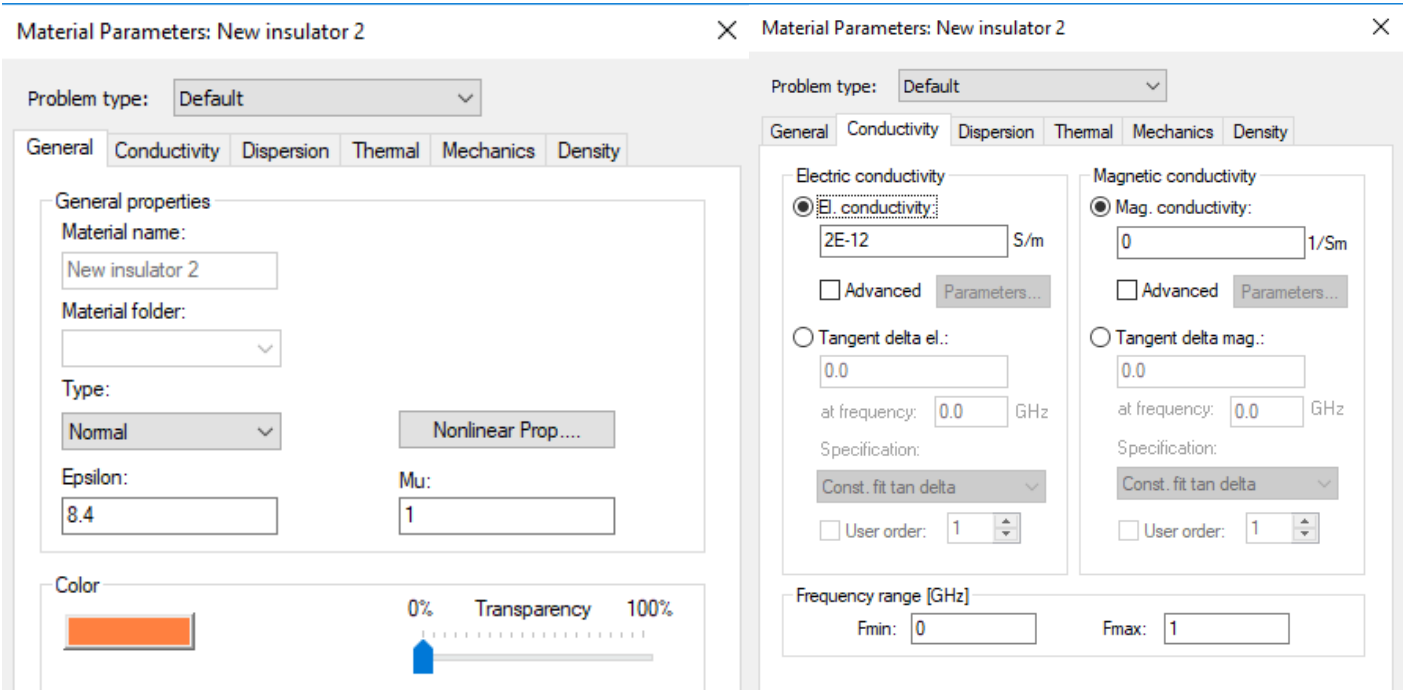

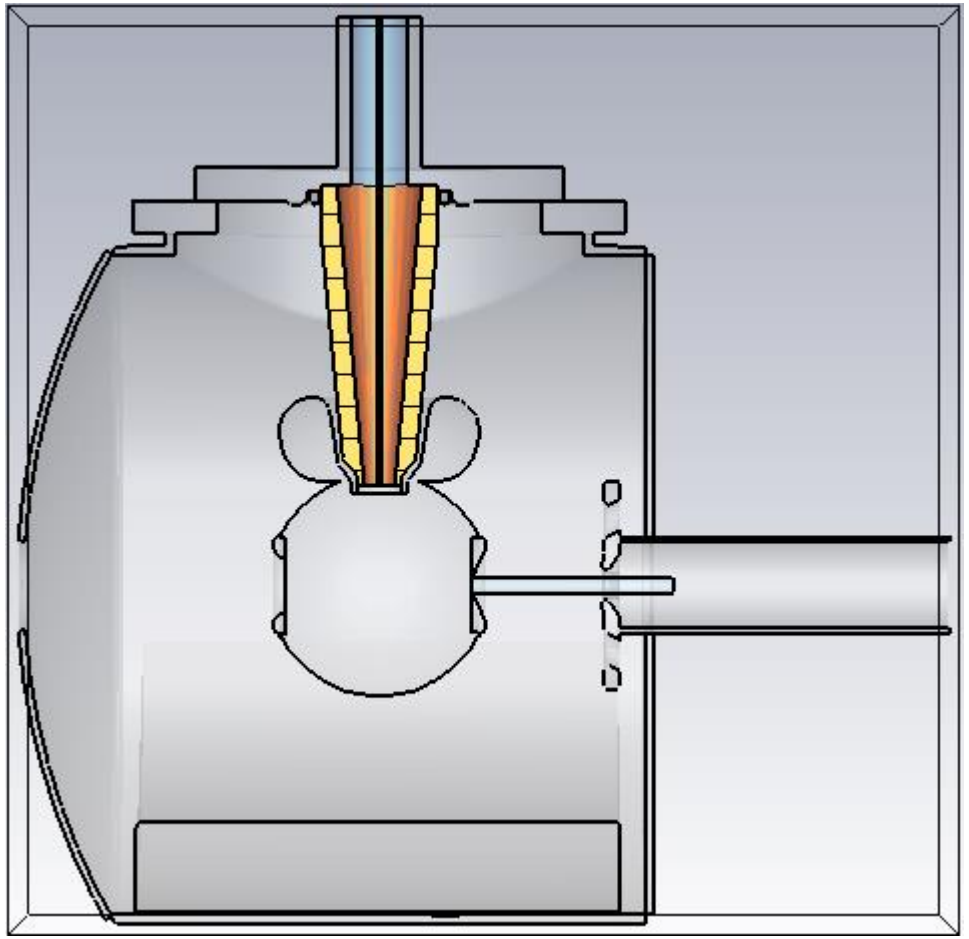

CST materials: Insulator

- For rubber I used the same parameters as in COMSOL.
- ε=2.37
- σ=1E-14 [S/m]

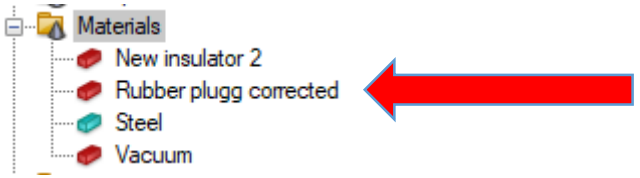

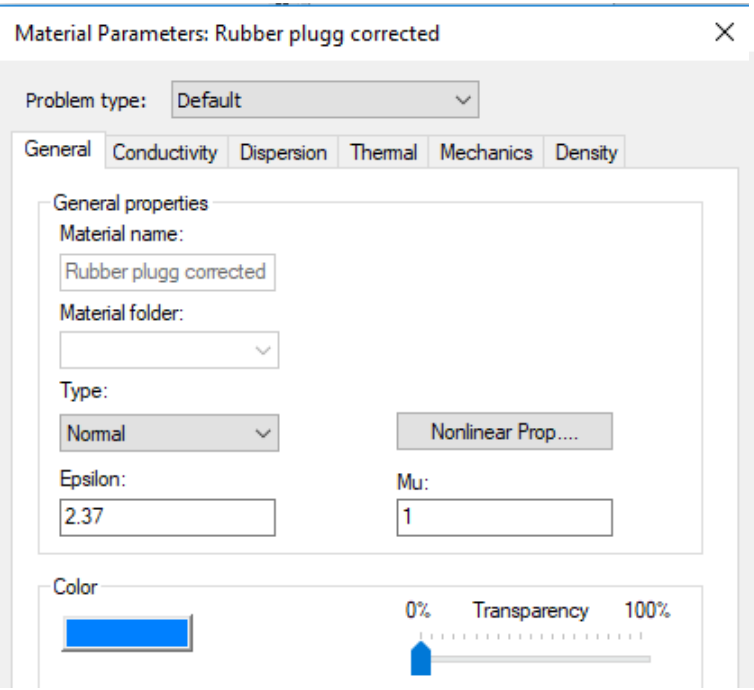

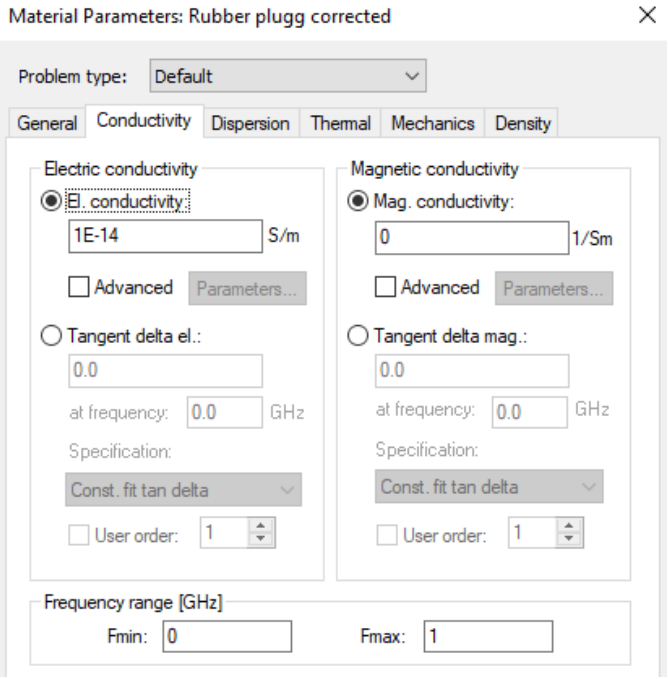

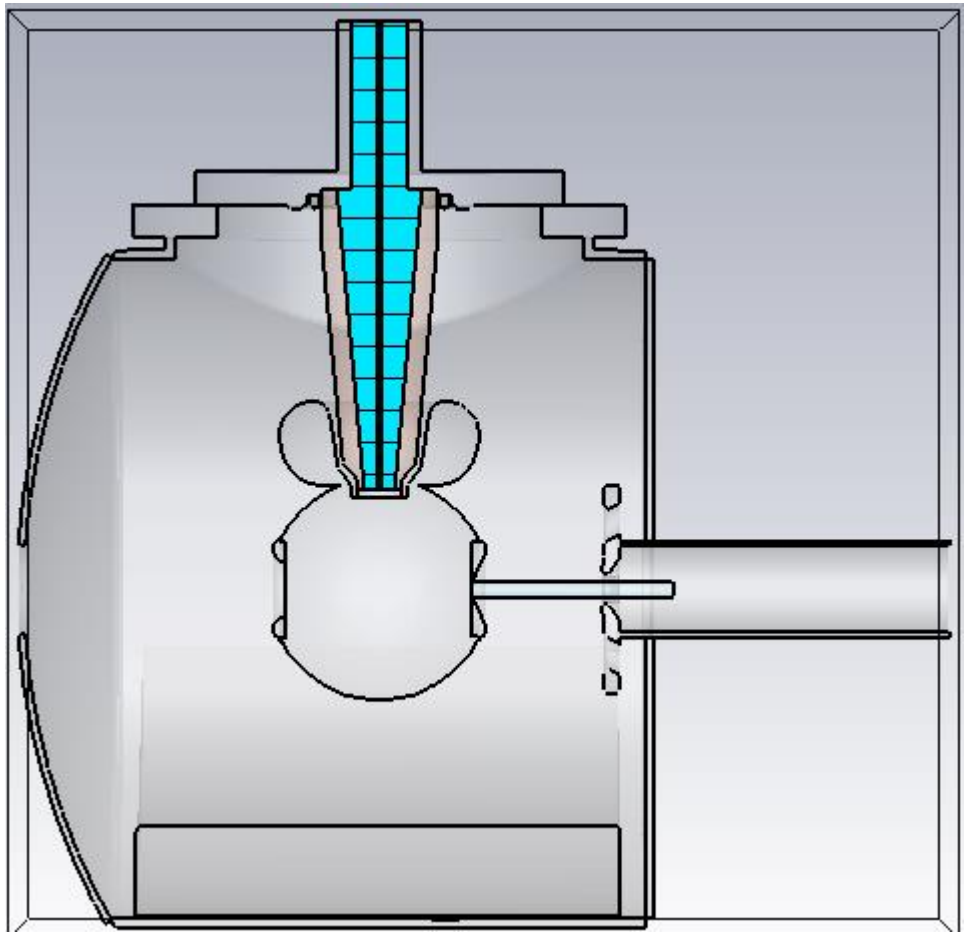

CST materials: Insulator

- For vacuum cylinder and soroundings.
- ε=1.0
- σ=0 [S/m]

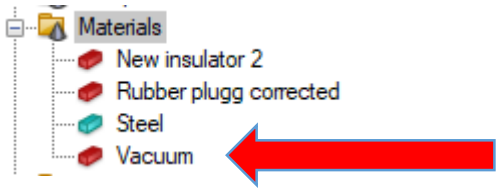

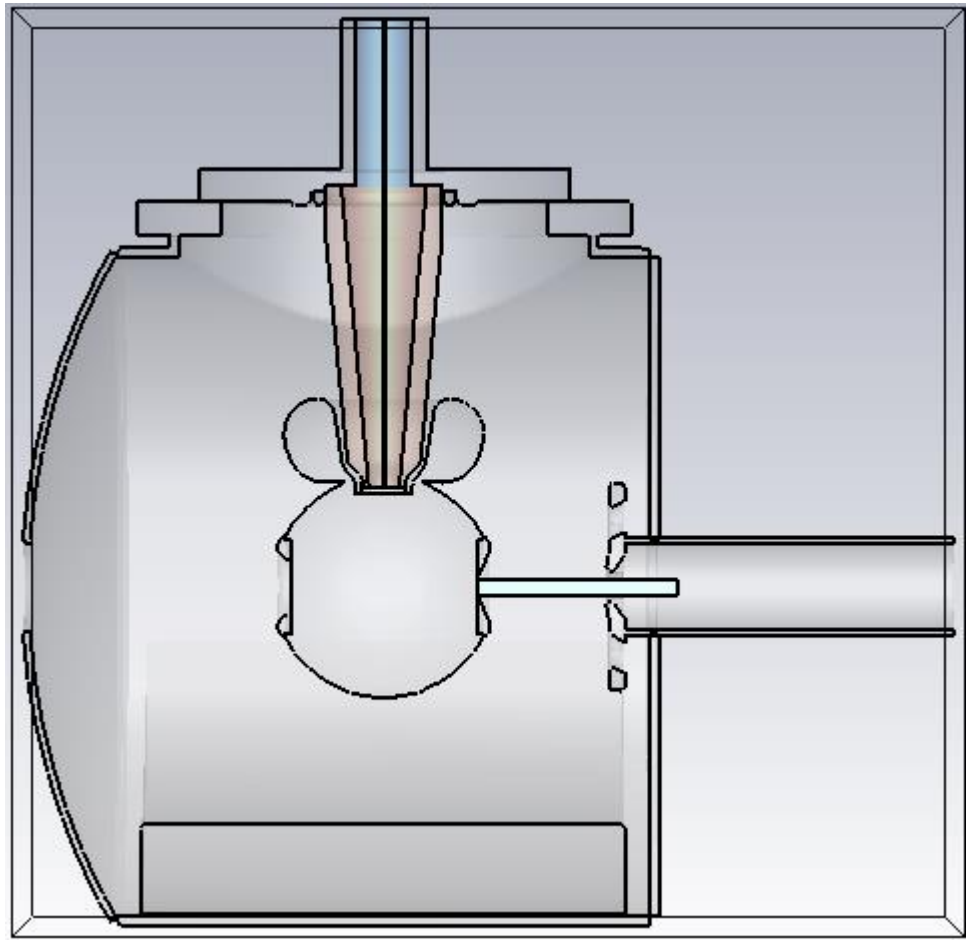

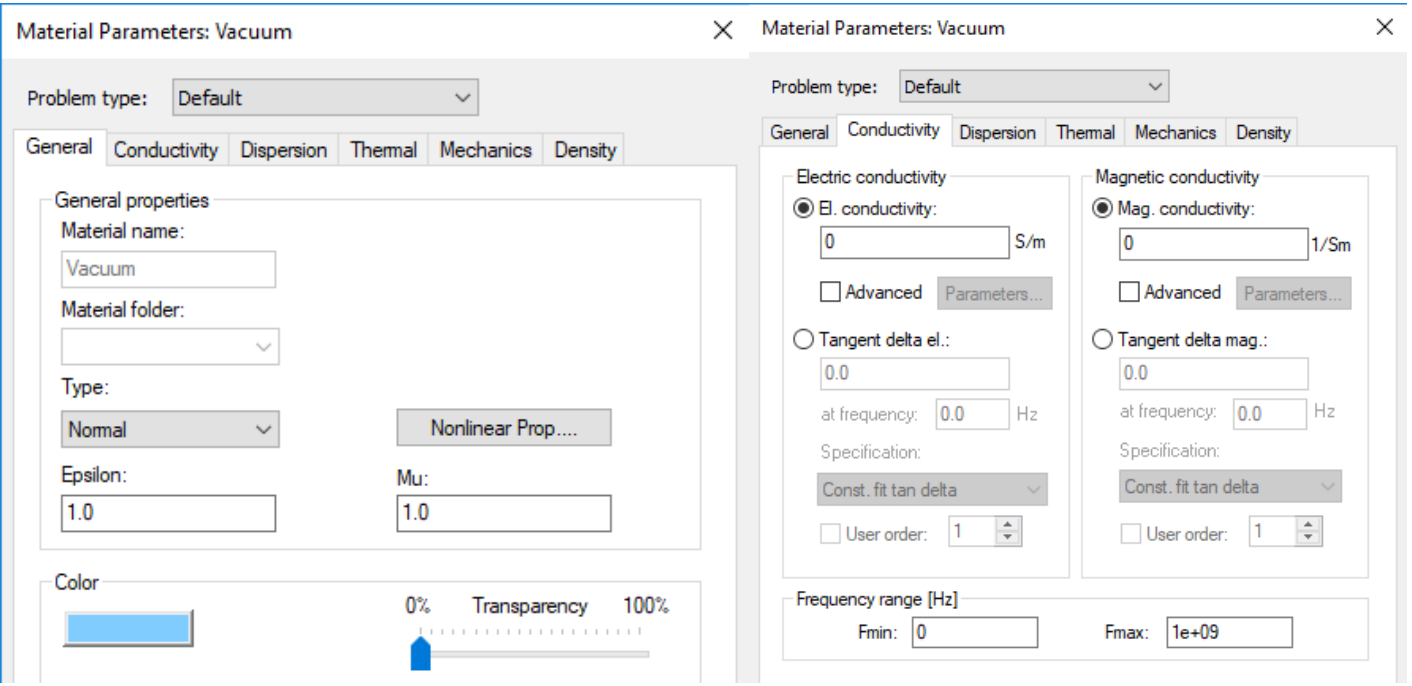

CST mesh:

- The mesh was separated into (maybe too many) pieces. :P
- The important part is, I only set some individual parts that require fine detail and left the rest to be auto-meshed.

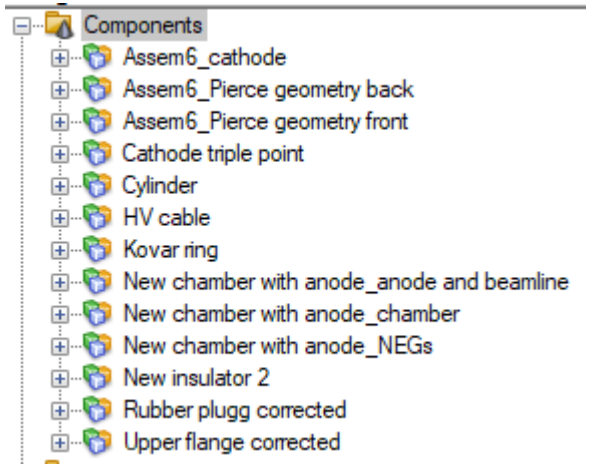

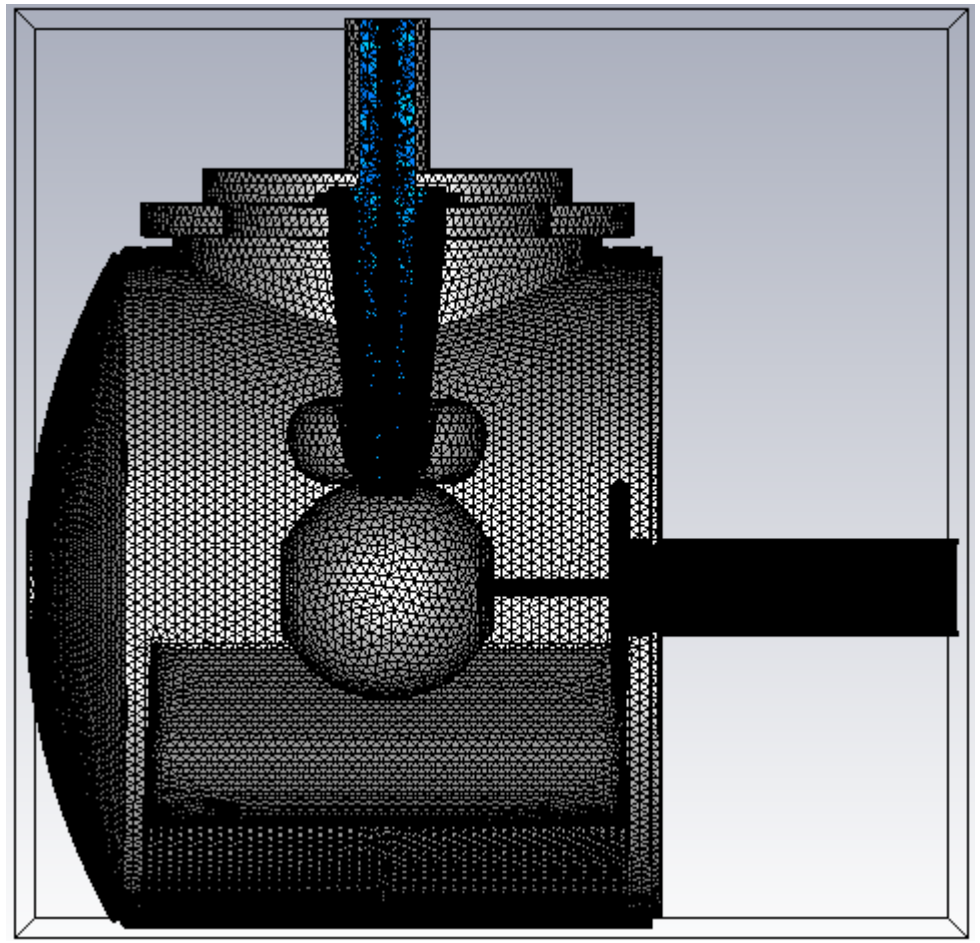

CST mesh: Pierce geometry

- The front Pierce geometry has a maximum step width of 0.01m.

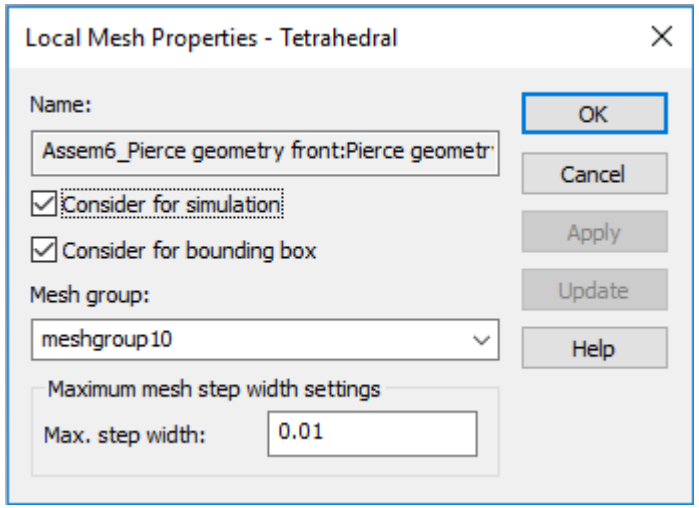

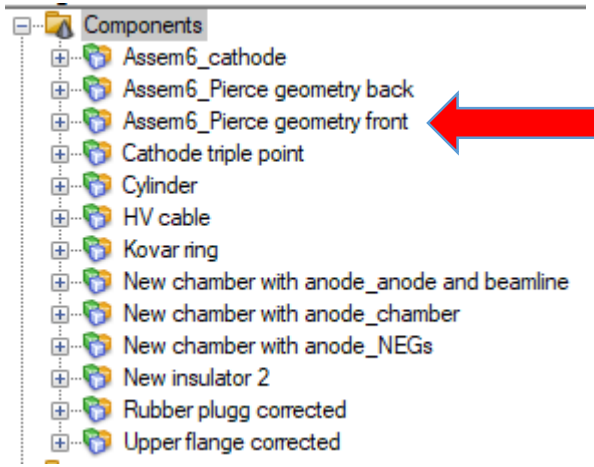

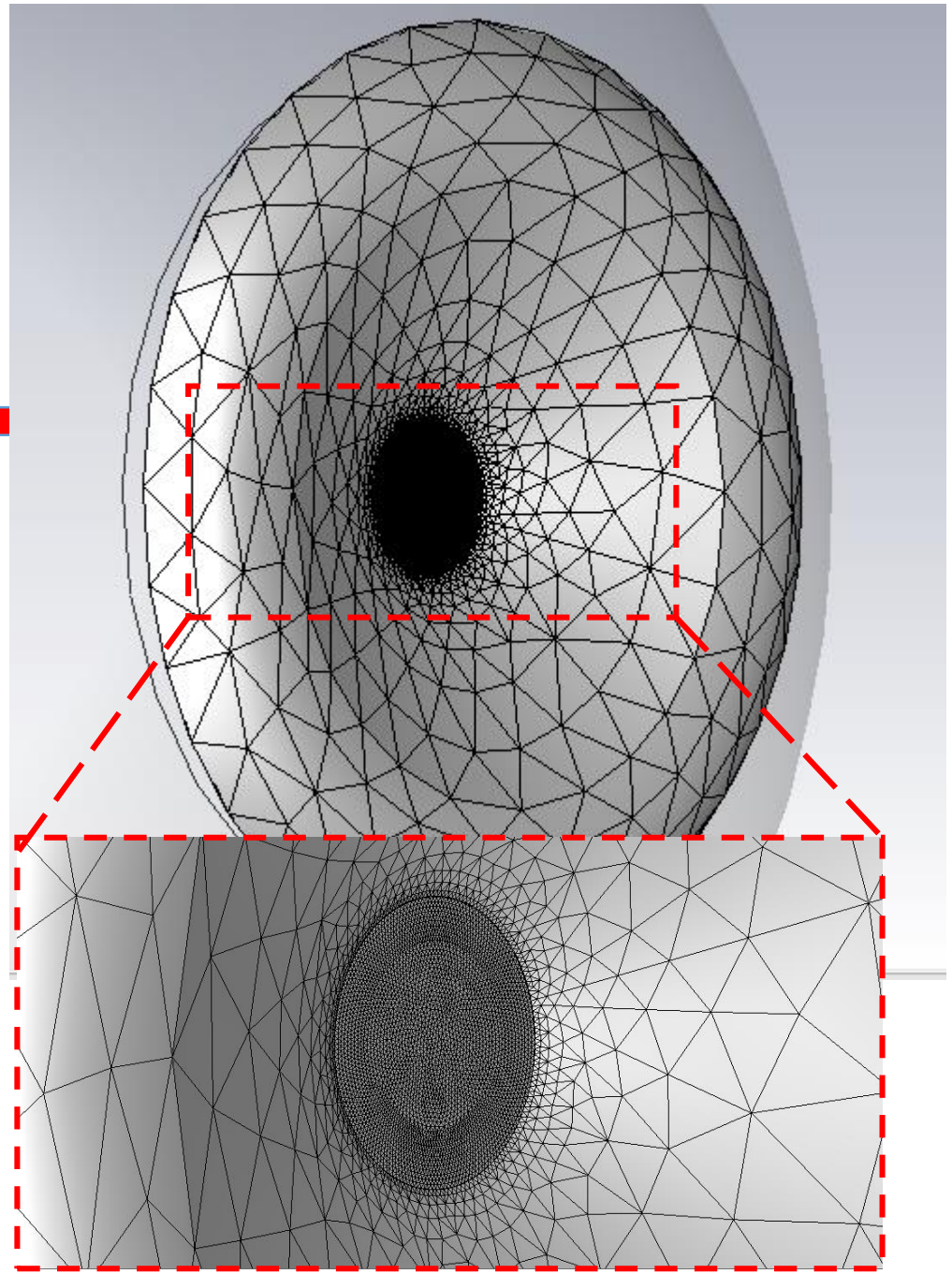

CST mesh: Cathode triple-point

- The cathode triple-point has a maximum step width of 0.001 [m].

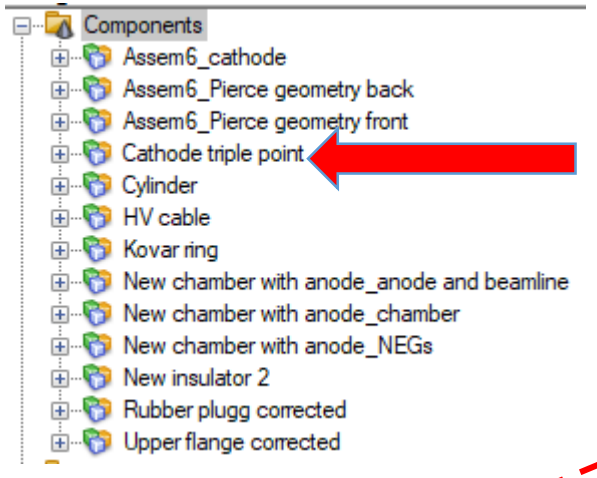

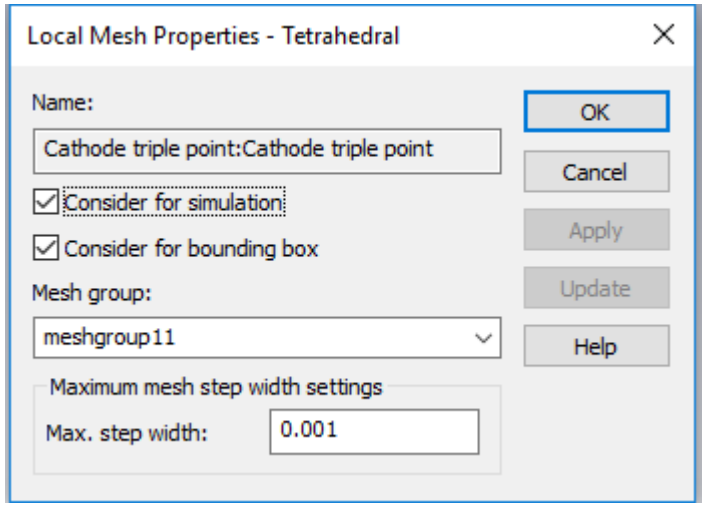

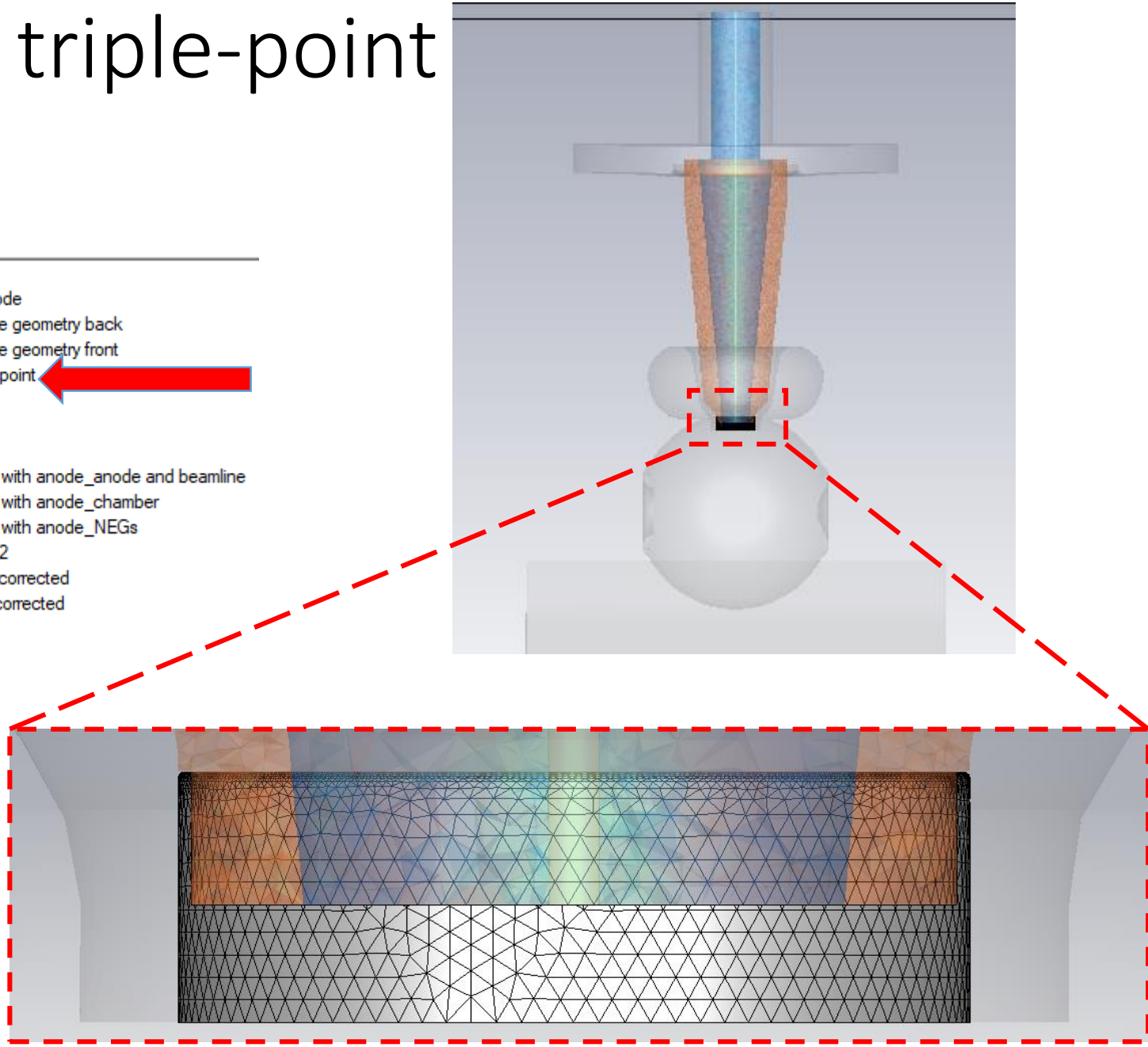

CST mesh: Cylinder for field maps

- The cylinder for field maps has a maximum step width of 0.0002 [m].

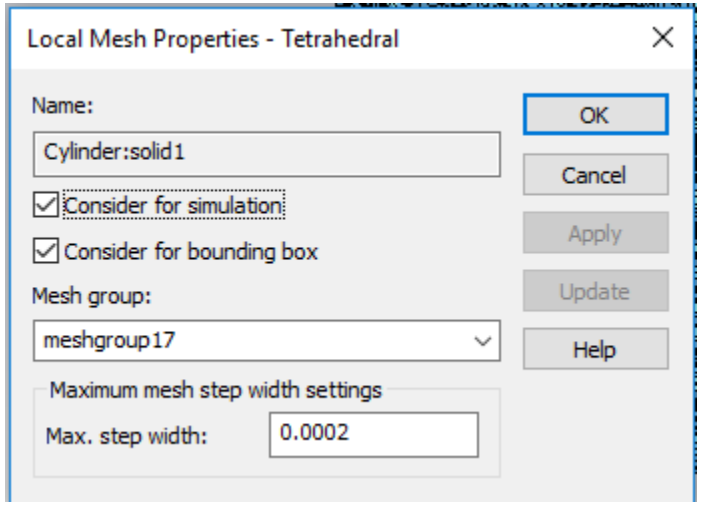

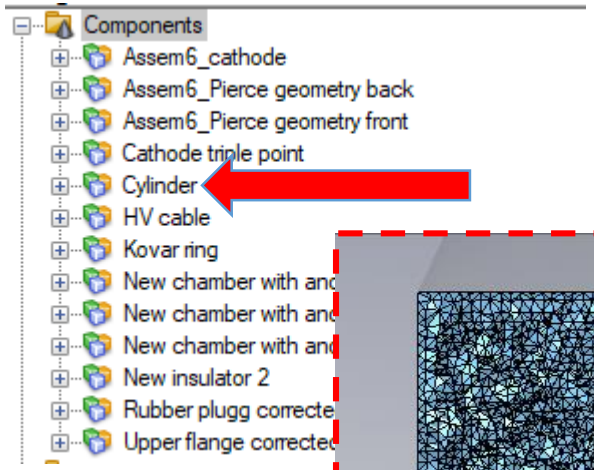

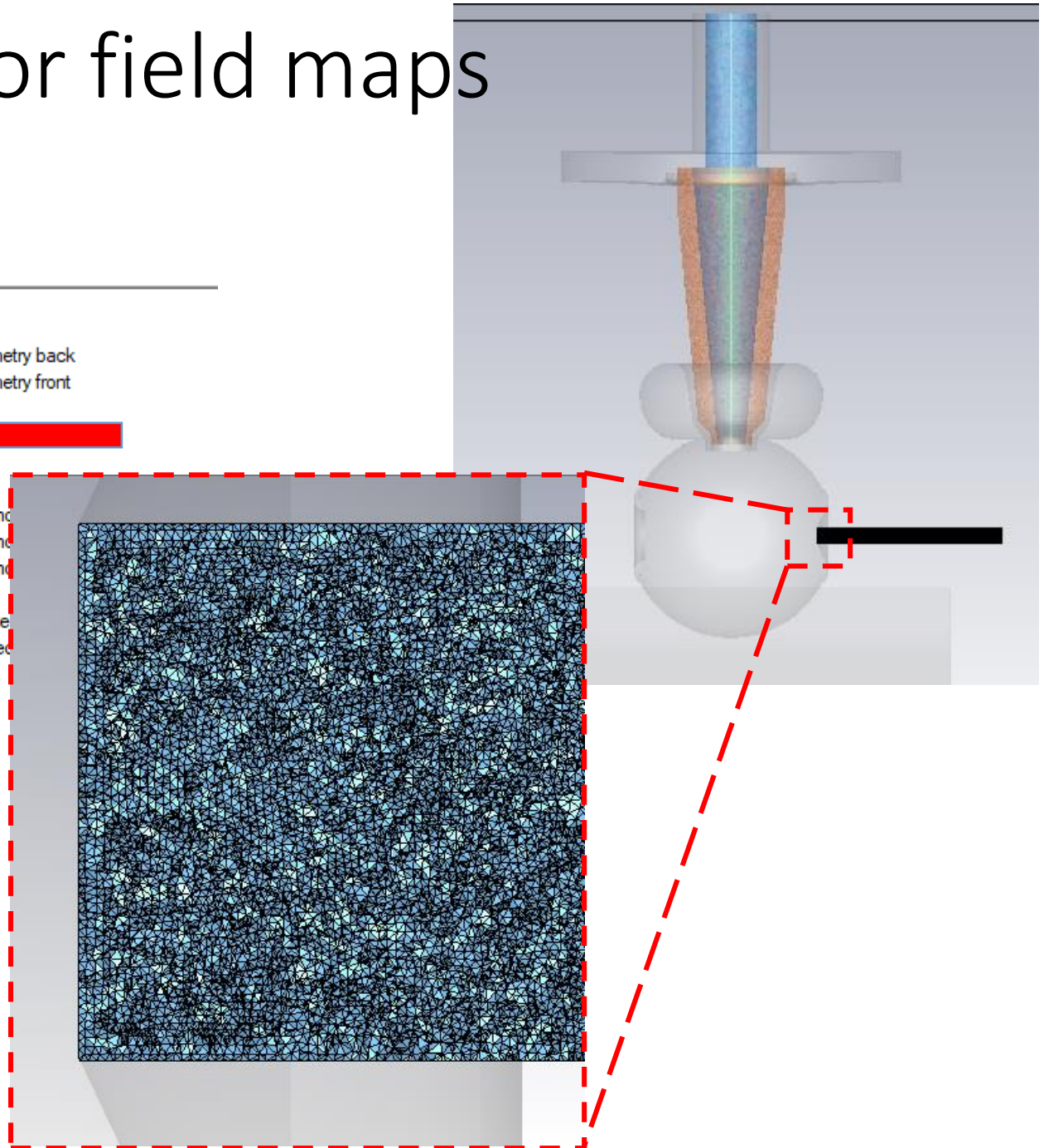

CST mesh: Upper Kovar ring

- The Kovar ring that holds the insulator to the upper flange has a maximum step width of 0.001 [m].

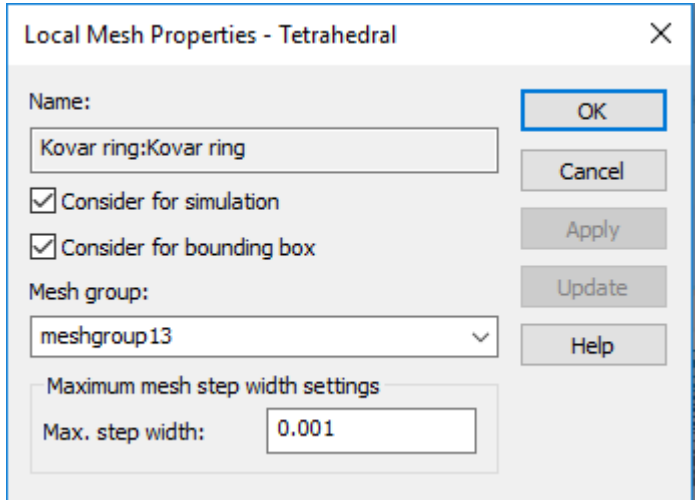

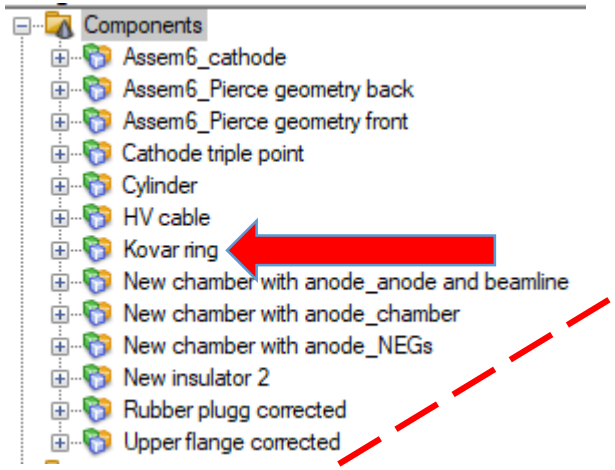

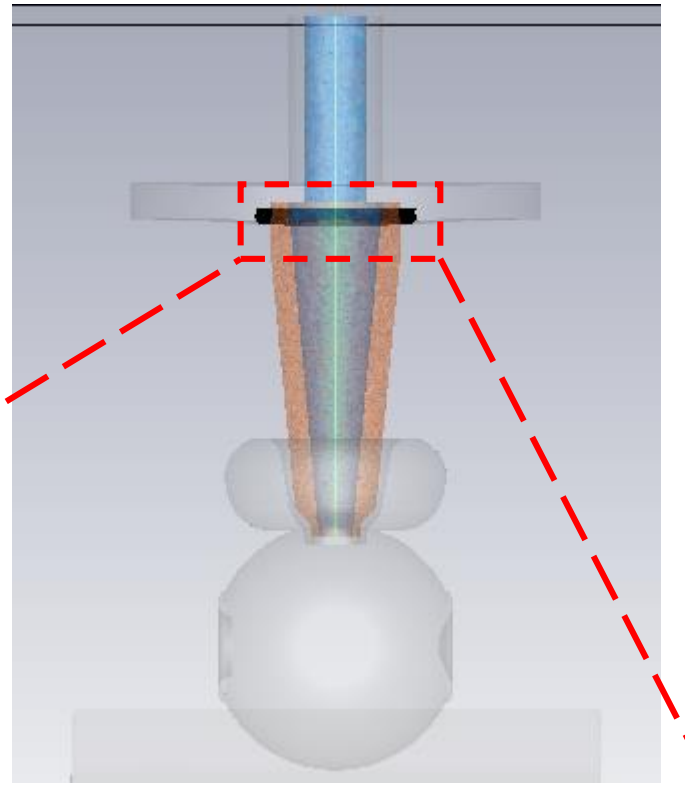

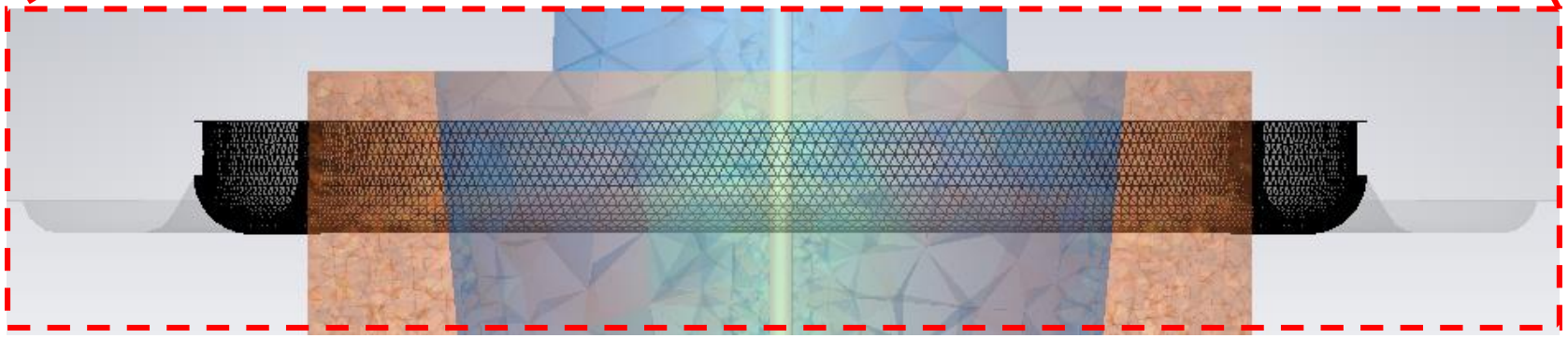

CST mesh: Anode and beam-line

- The anode and beam line have a maximum step width of 0.001 [m].

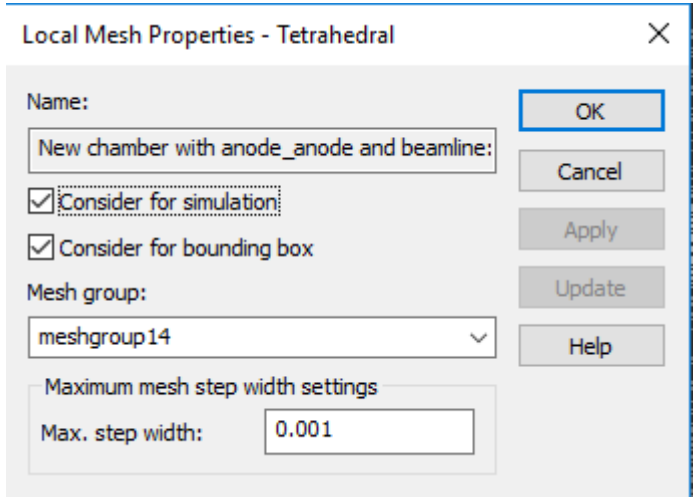

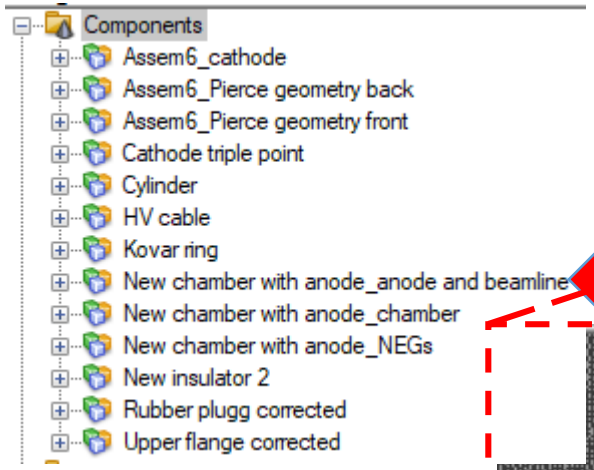

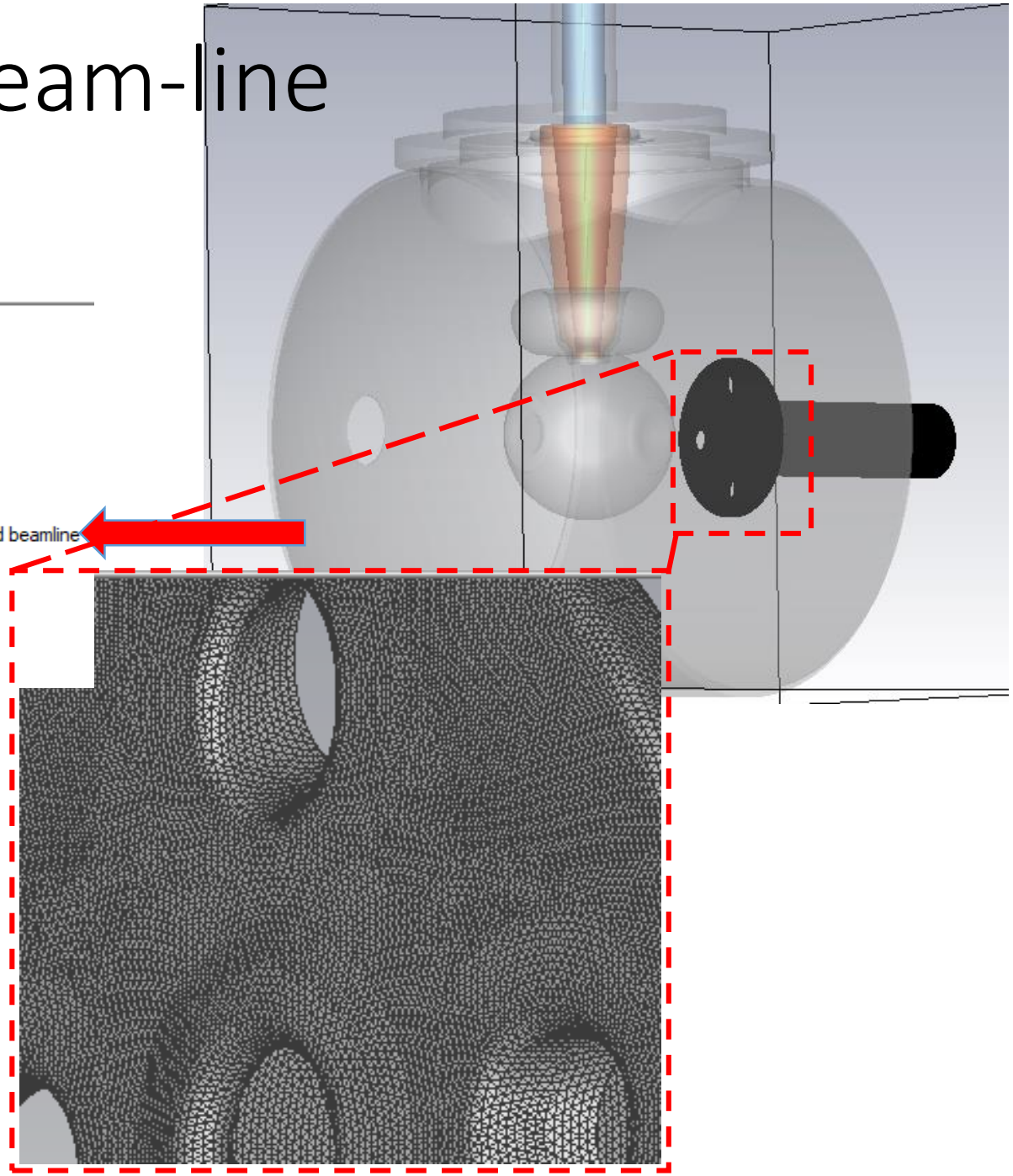

CST mesh: Insulator

- The insulator has a maximum step width of 0.001 [m].

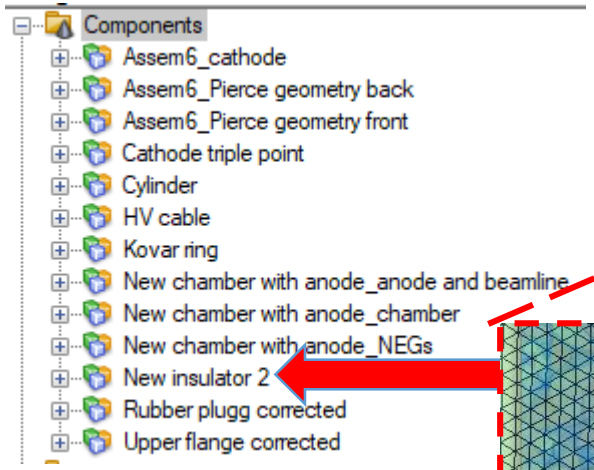

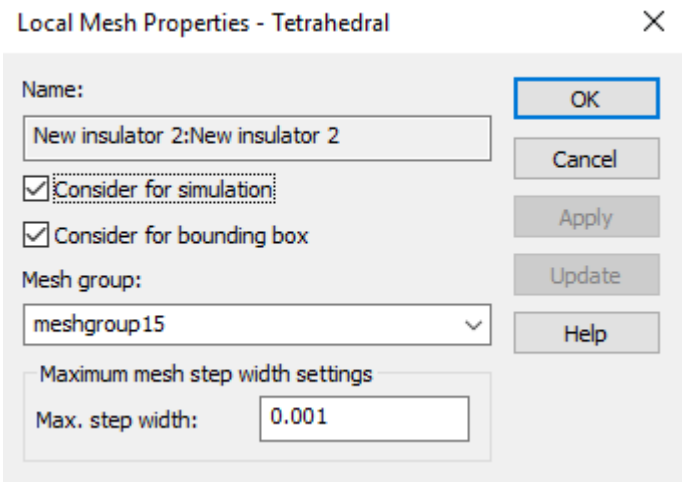

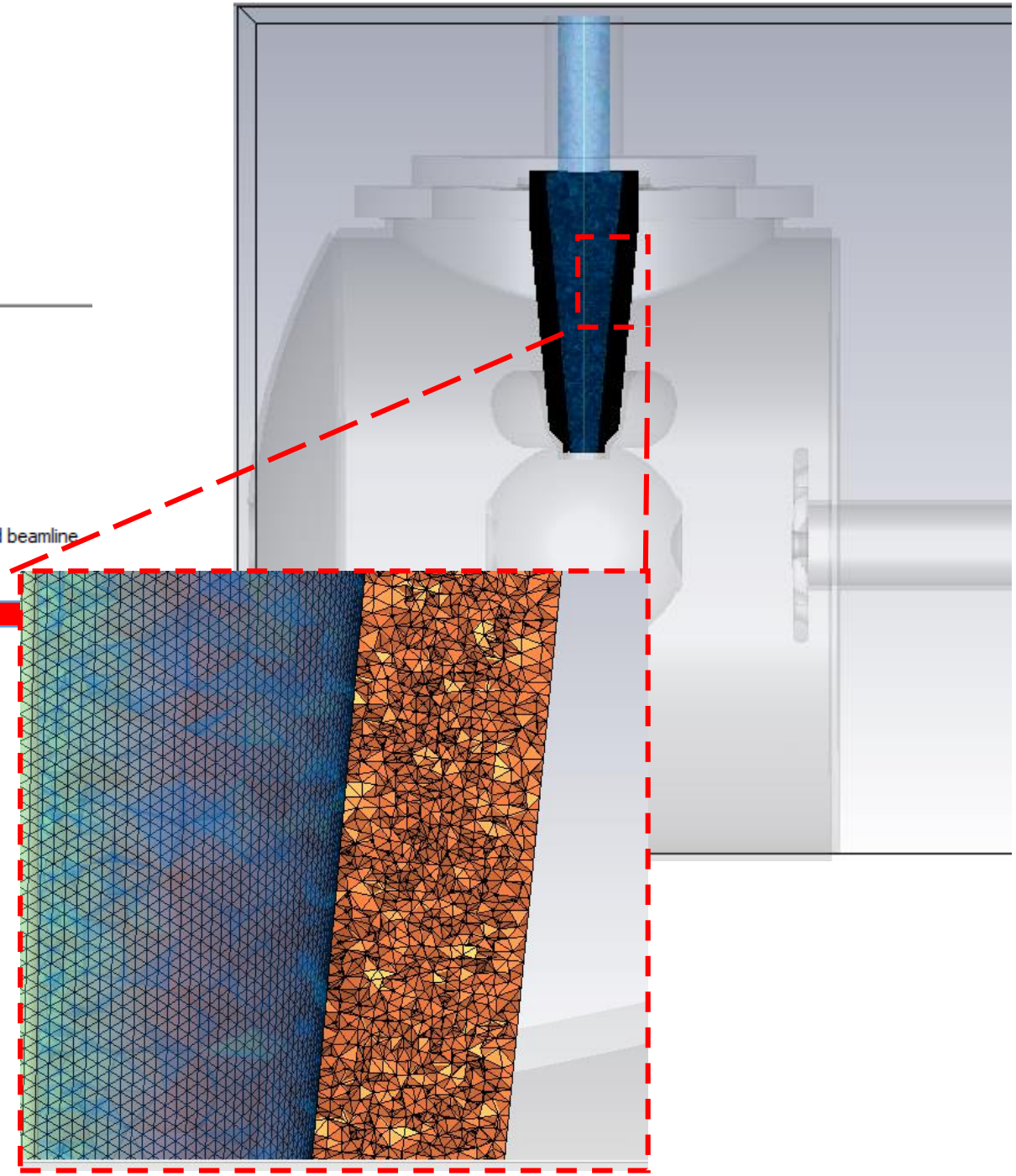

CST mesh: Rubber plug

- The rubber plug has a maximum step width of 0.01 [m].

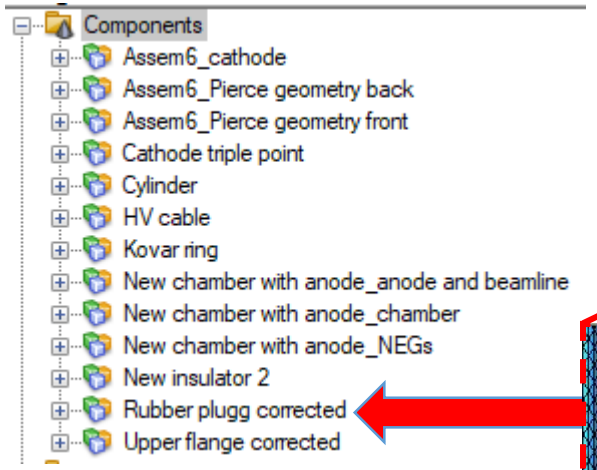

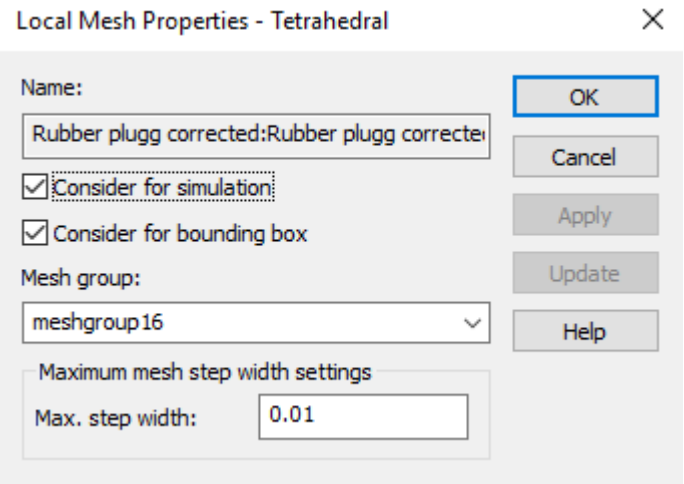

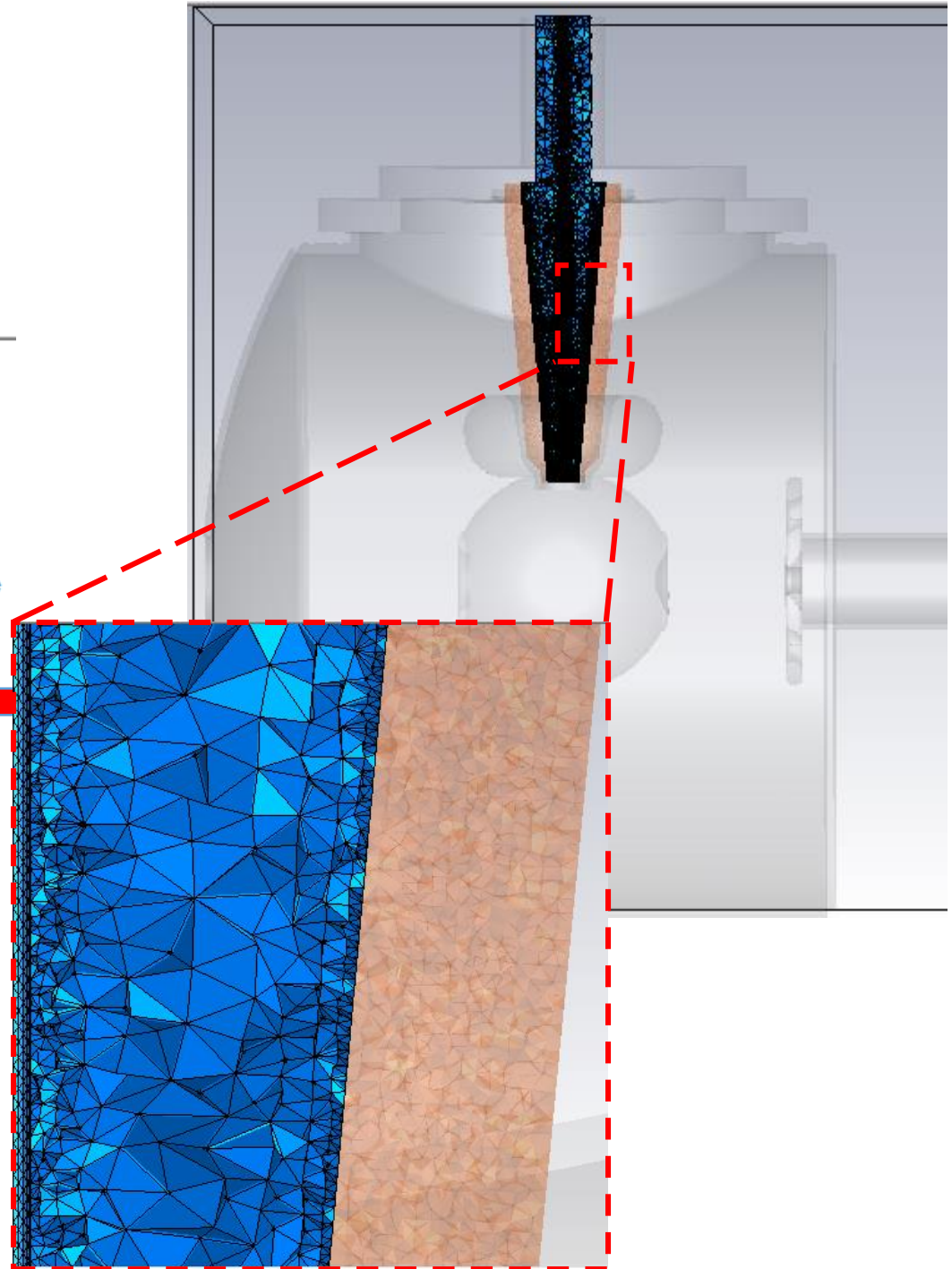

CST simulation: Background

- The background is defined as vacuum.

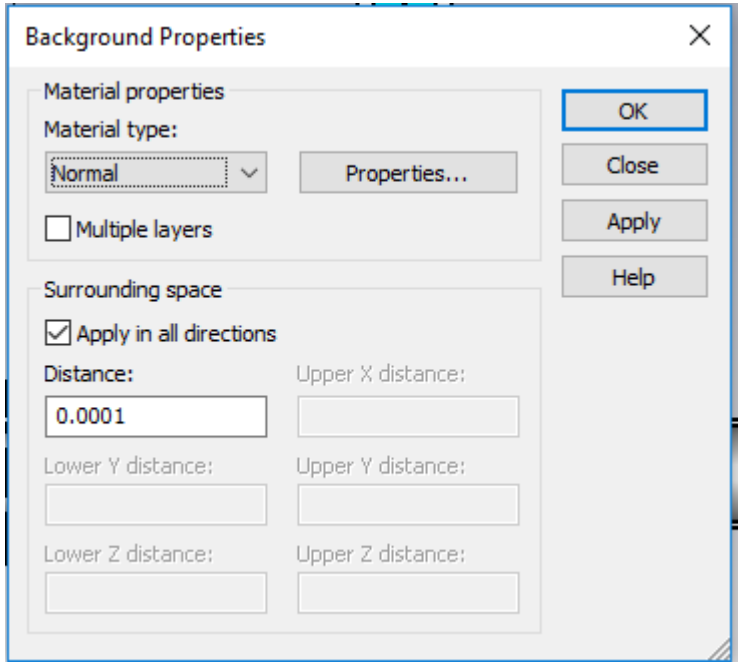

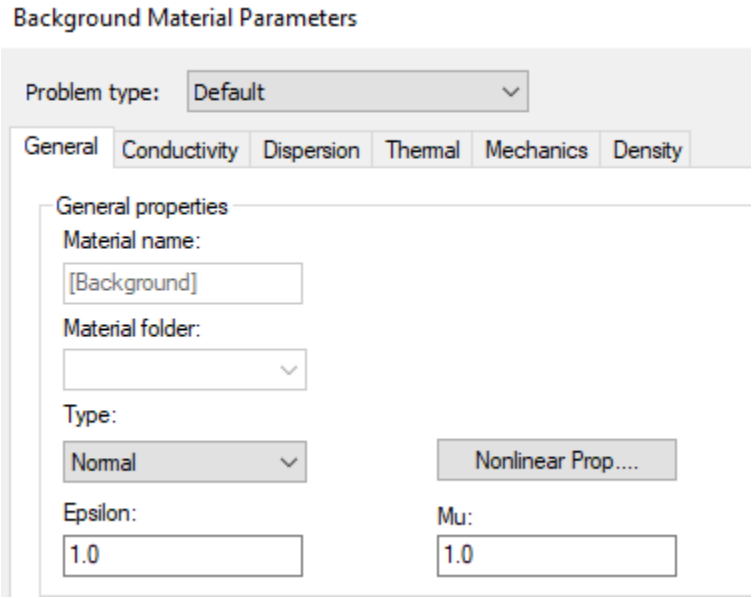

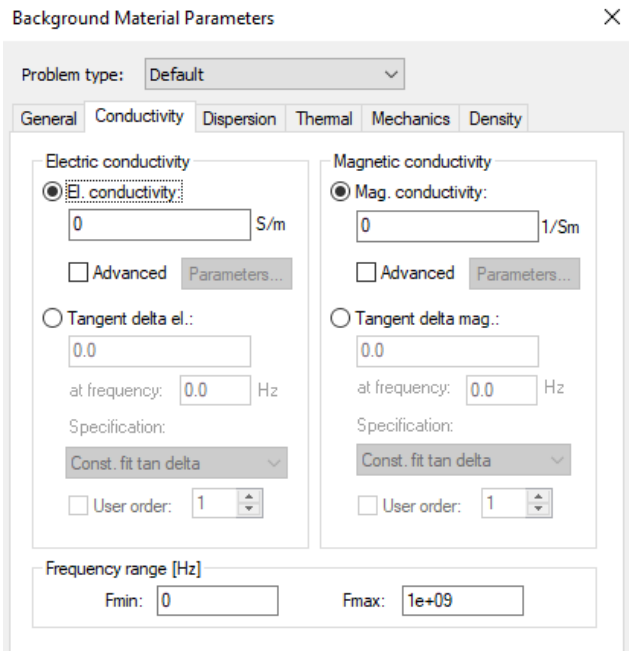

CST simulation: Boundaries

- The boundaries are set to ground except the top and the back of the beam line

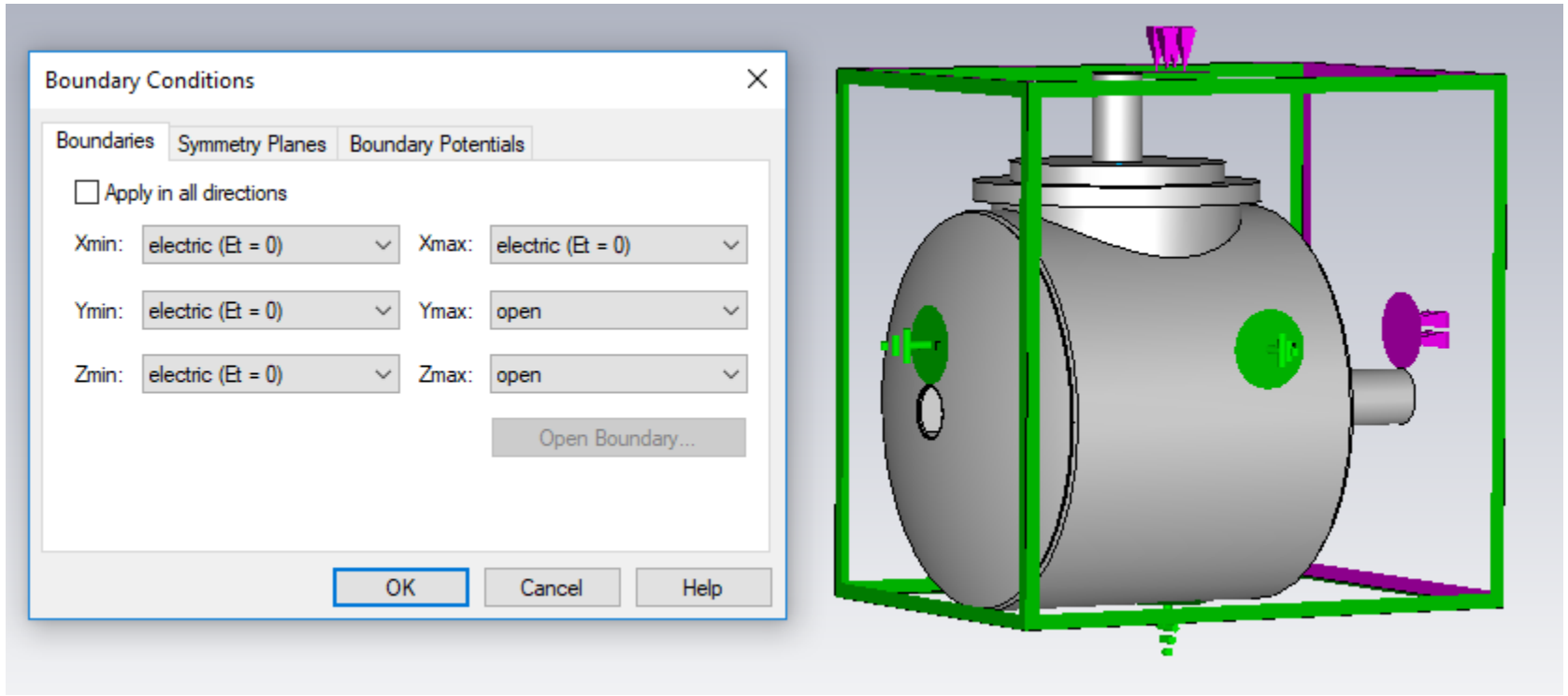

CST simulation: Potential

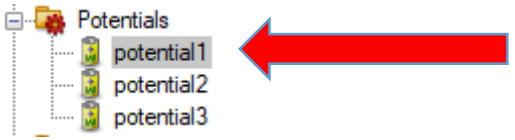

- I defined the potential in three parts:
  - Chamber, upper flange, Kovar ring, anode and beam-pipe at 0 [V]

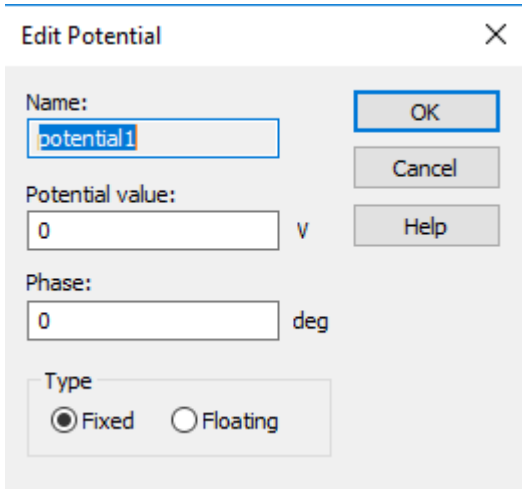

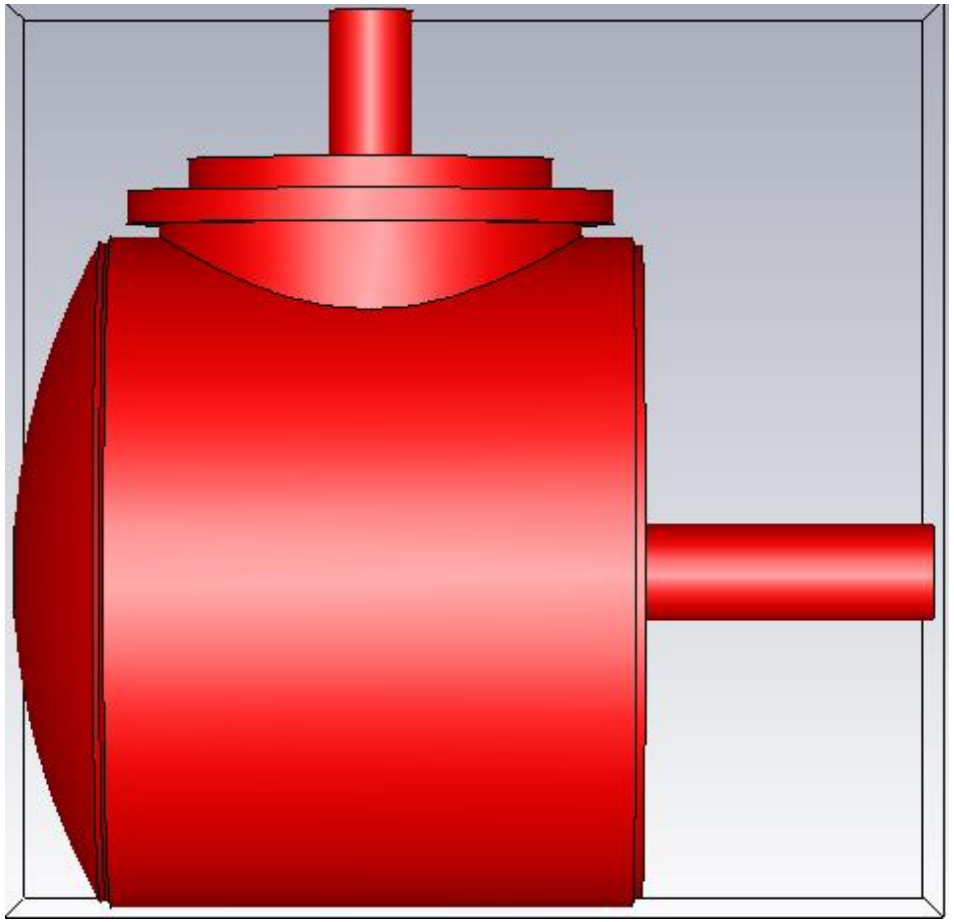

CST simulation: Potential

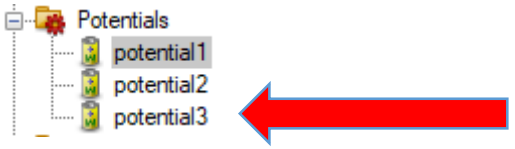

- I defined the potential in three parts:
  - Also the NEG's at 0 [V]

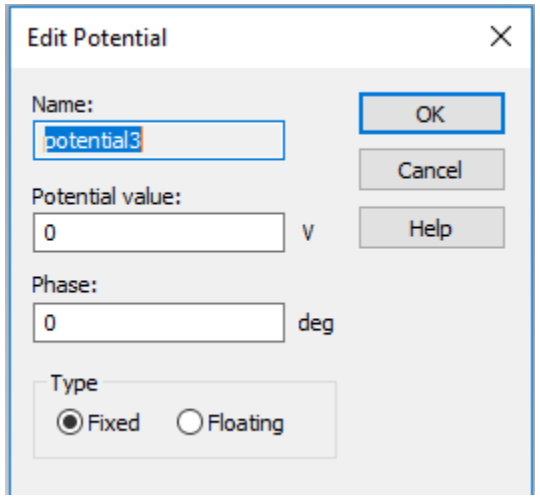

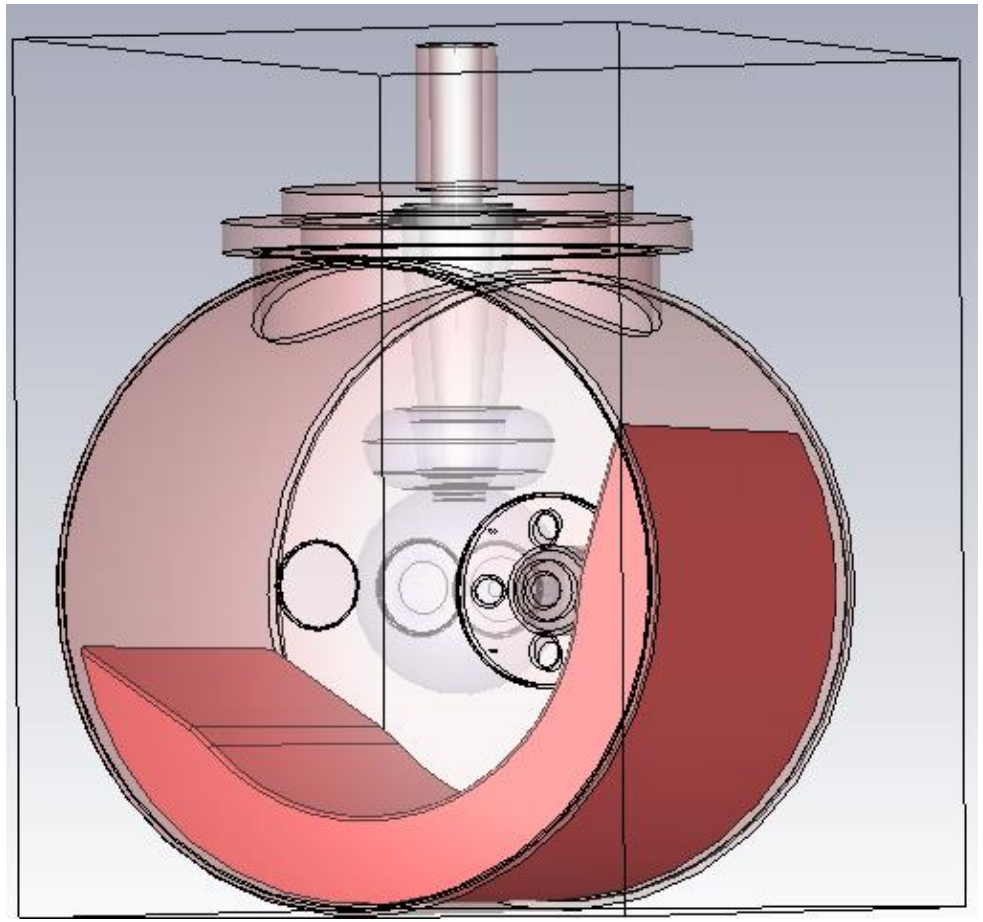

CST simulation: Potential

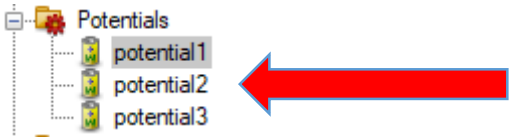

- I defined the potential in three parts:
  - Cathode electrode (including Pierce geometry), shield and high voltage cable at -300 [kV]

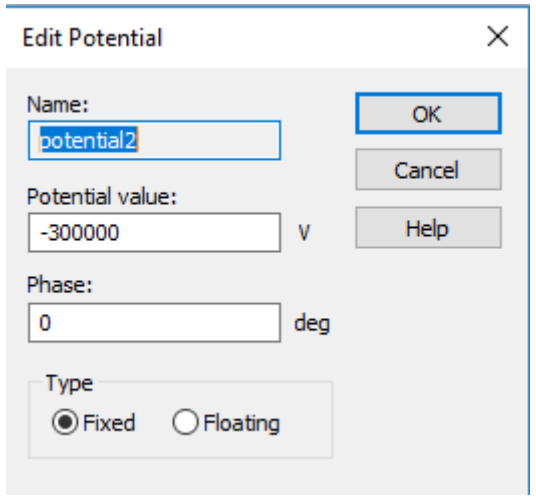

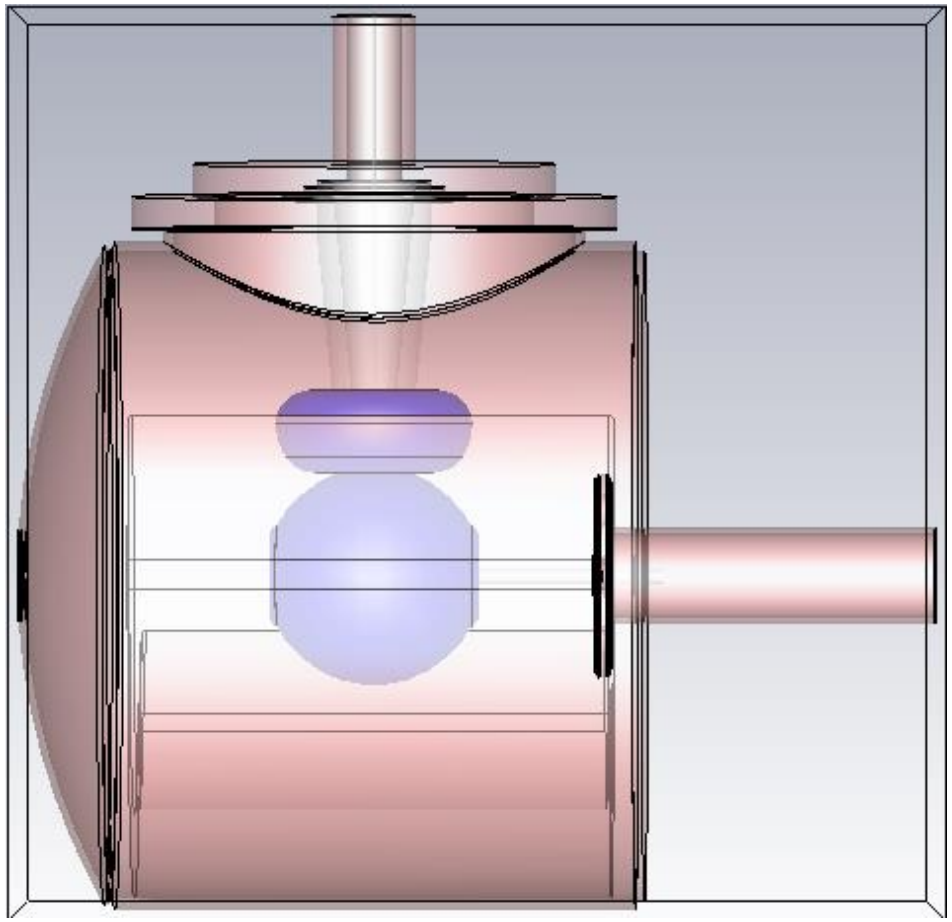

CST simulation: Solver

- Used the Low frequency as suggested by Fay.
- Did not use the adaptative mesh refinement this time.

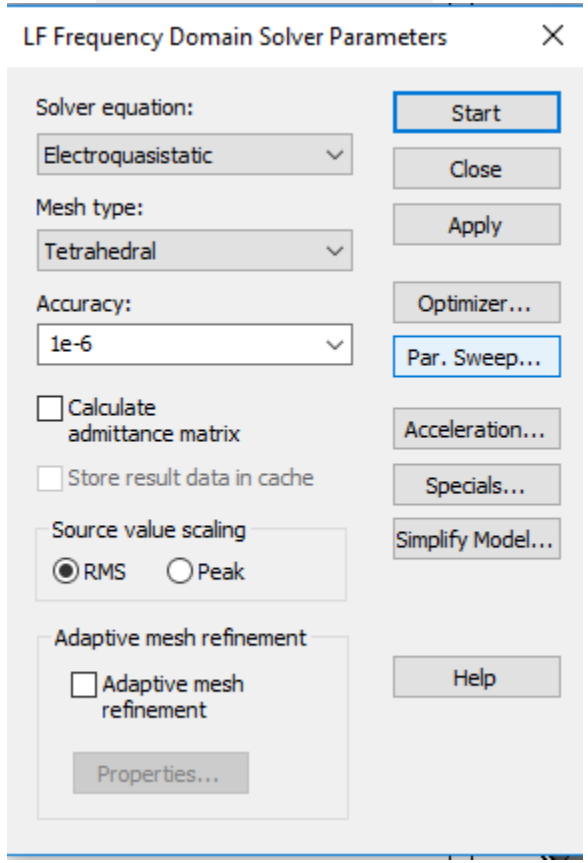

CST results: Potential

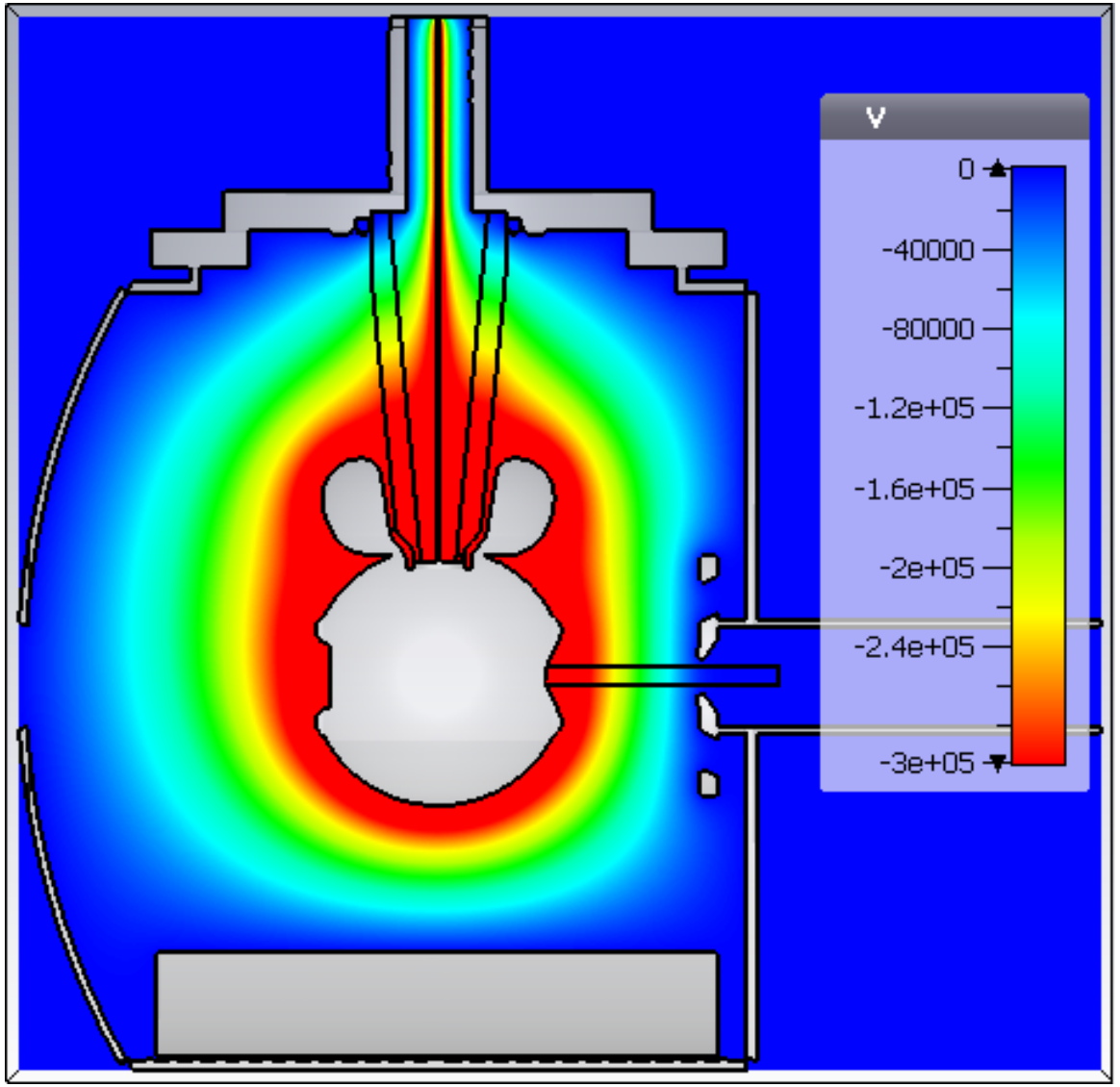

CST results: Electric field norm

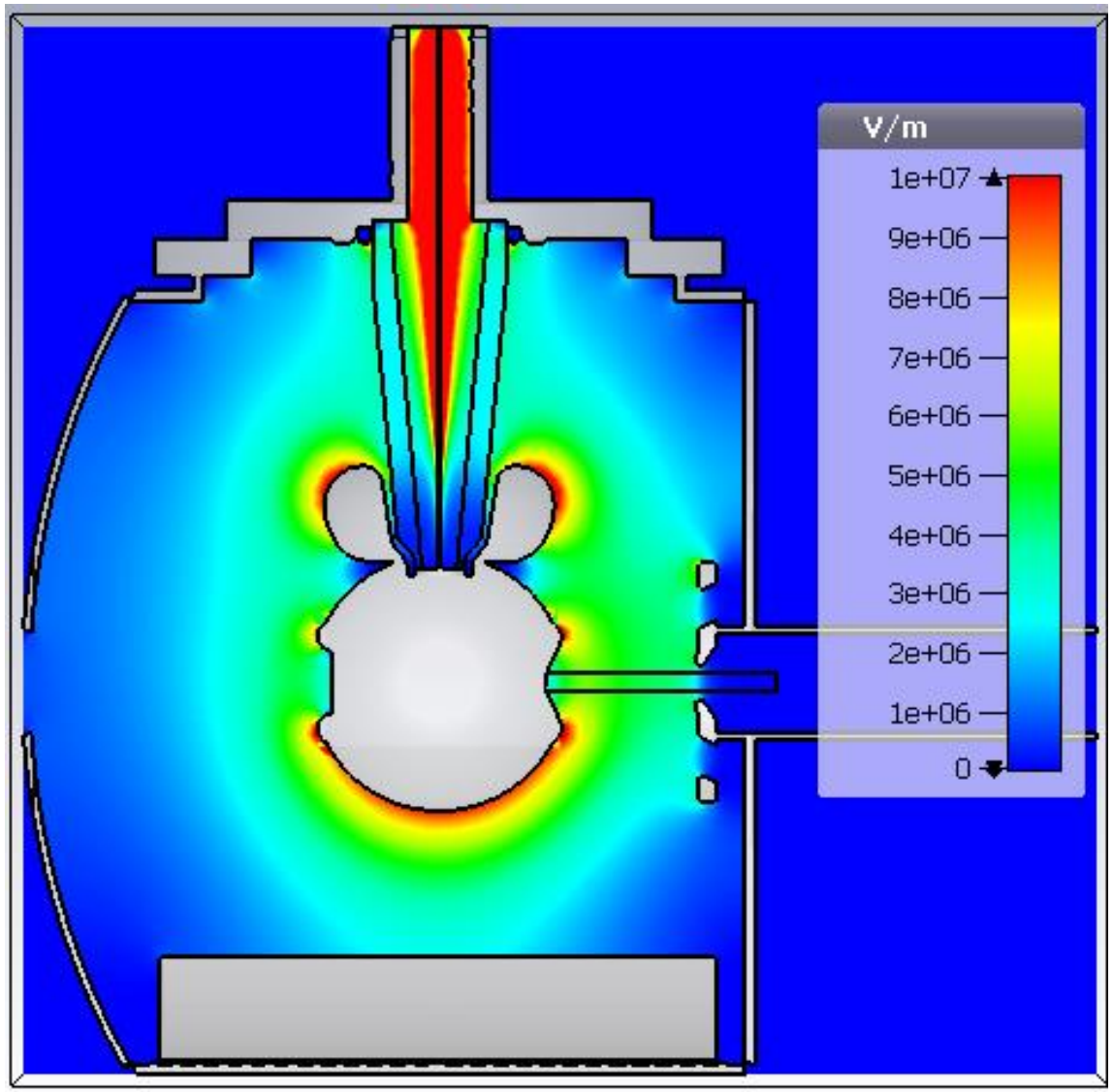

CST results: Electric field norm

Cathode- anode gap close up.

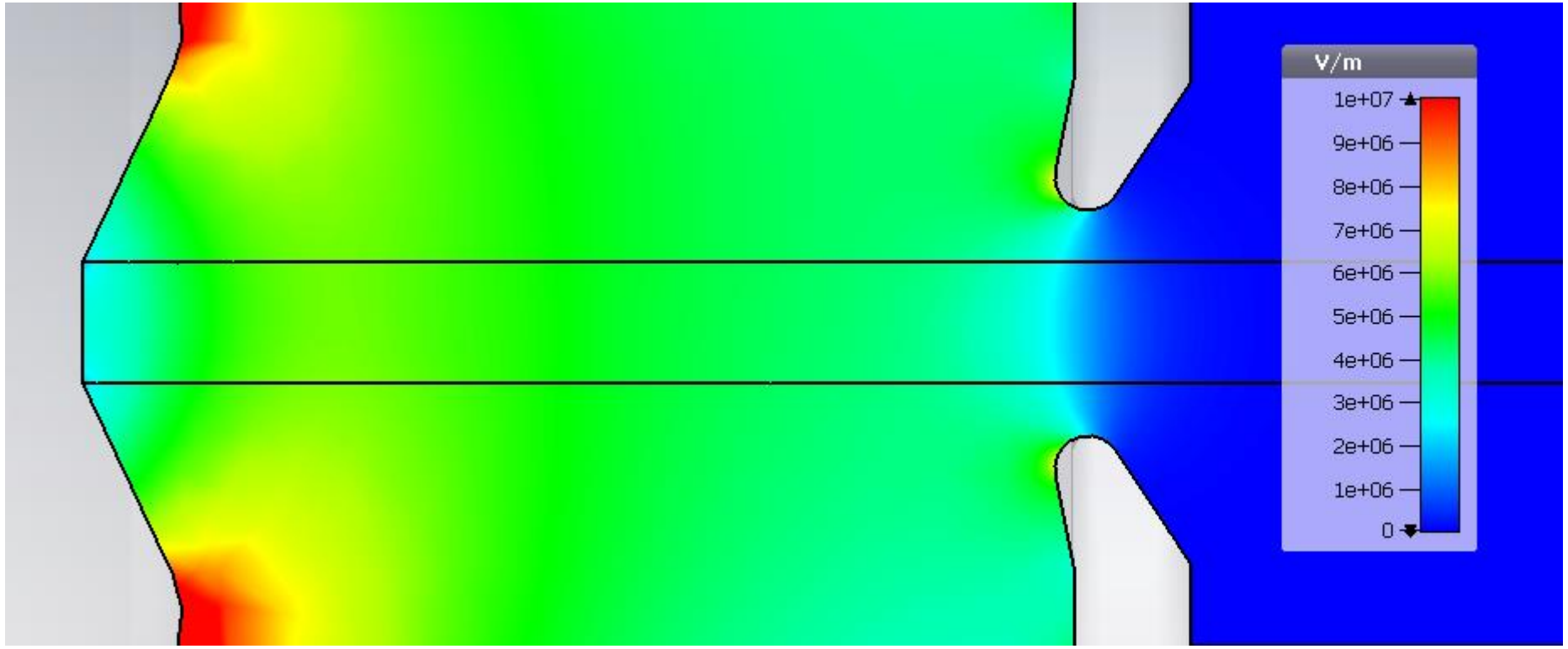

CST results:

- The results for electric field magnitude and potential plotted as false color. Also produced 2D and 3D field maps for the cathode-anode gap.

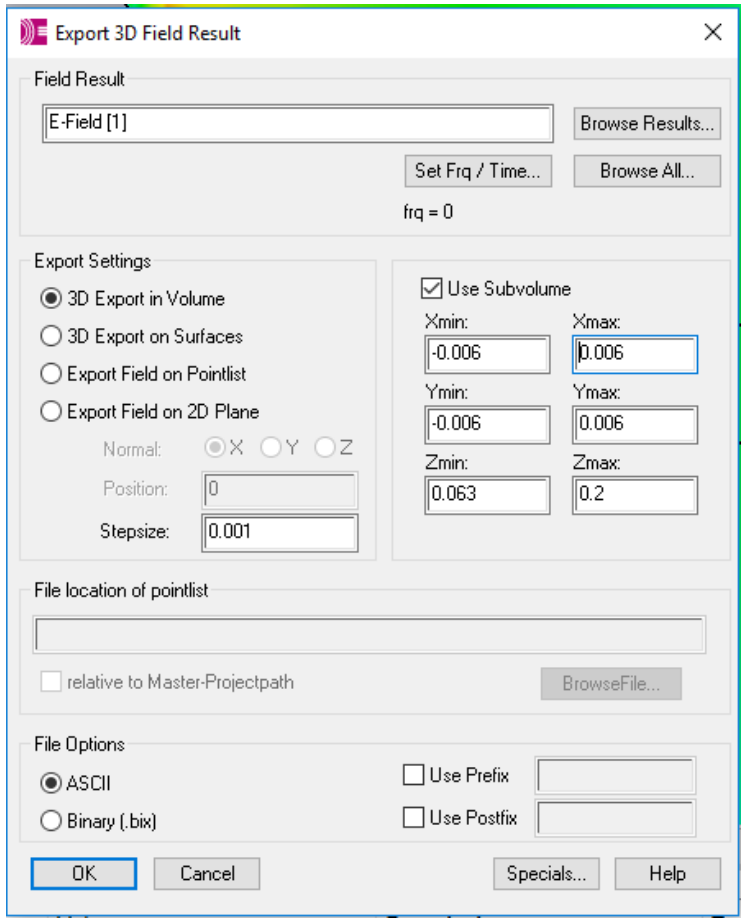

Photocathode-anode line:

The data for the following plots was taken along a horizontal line from the center of the photocathode to the back of the chamber passing through the anode center as shown in the red line

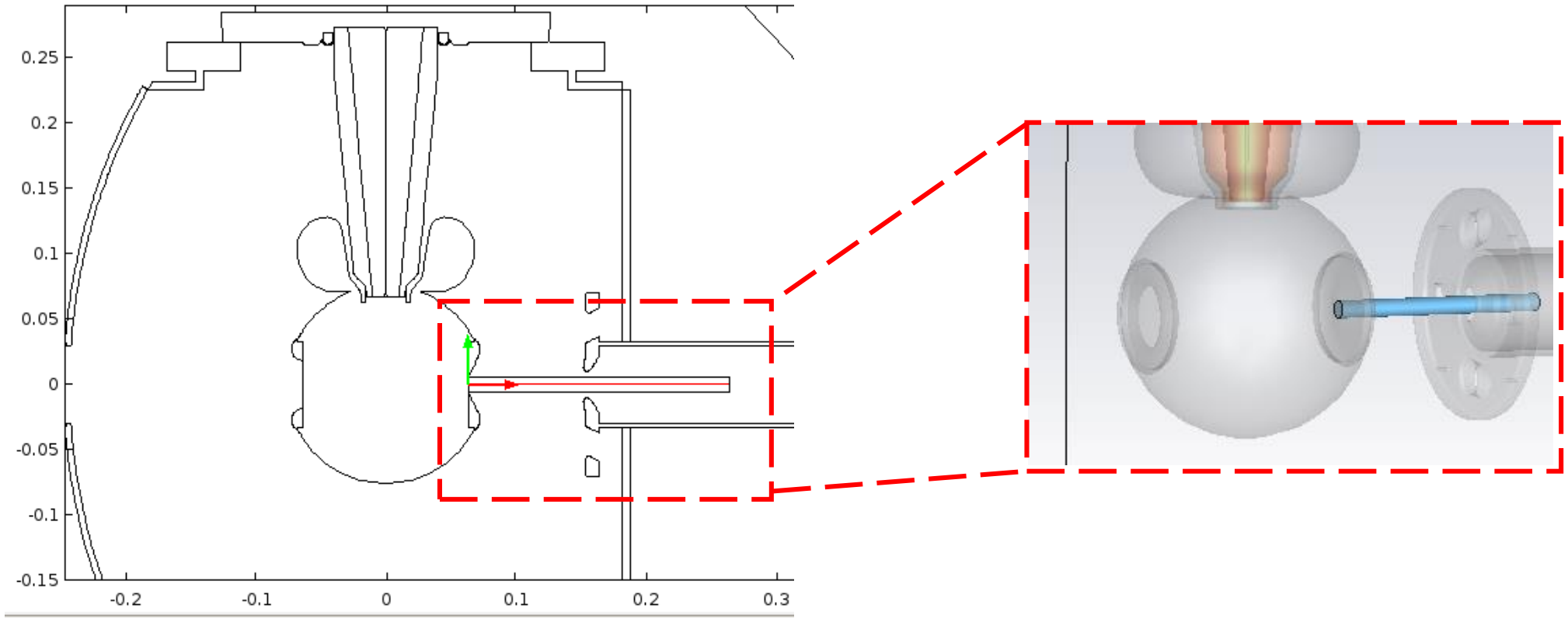

Photocathode-anode line :

- This image shows the electric field Ey component in MV/m as a function of position on the z axis.

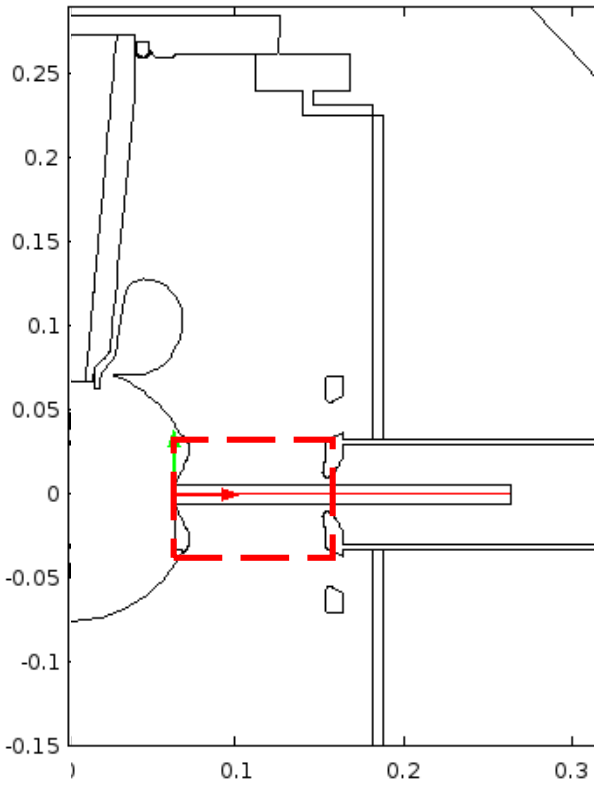

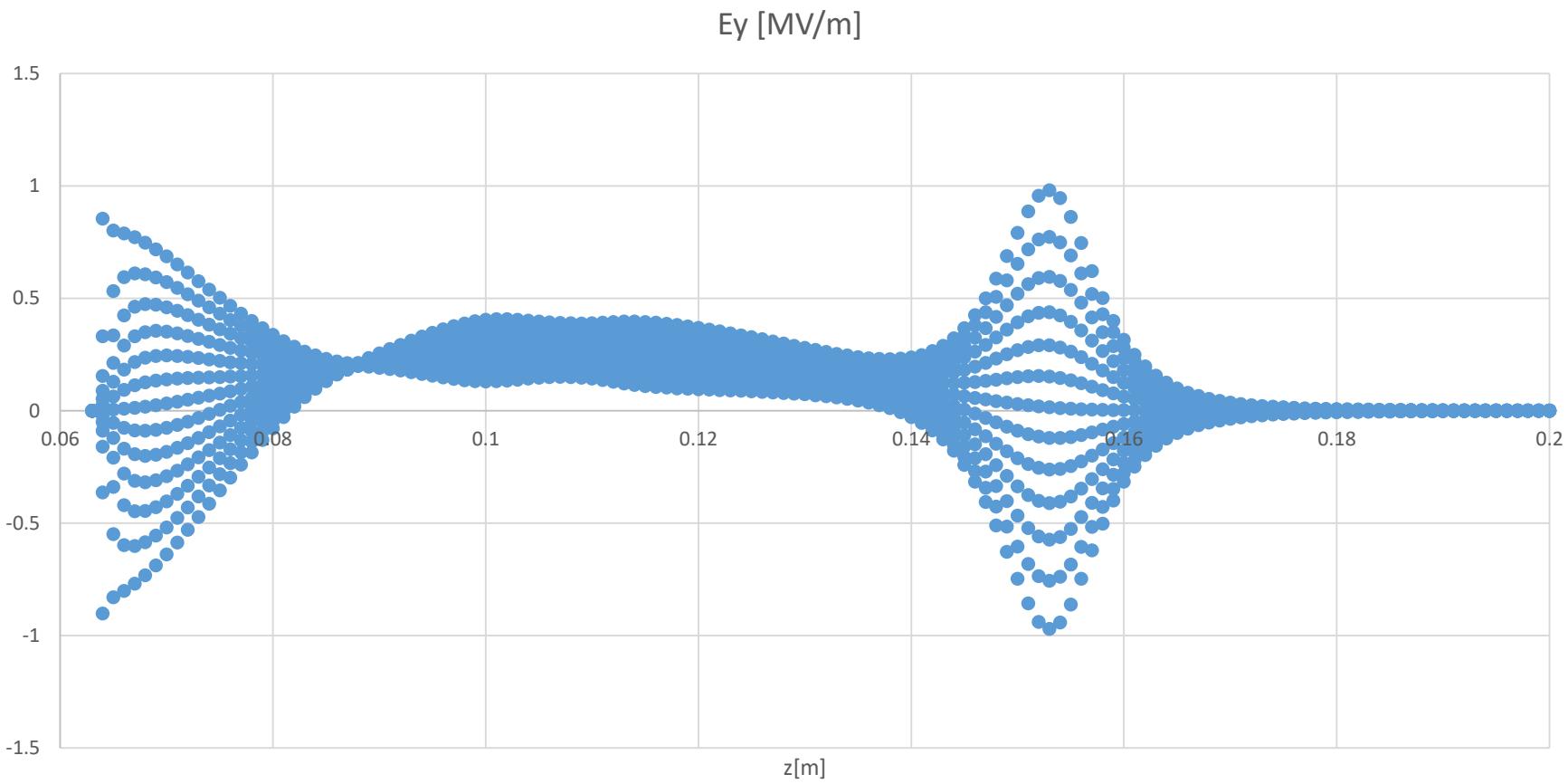

Photocathode-anode line :

- This image shows the electric field Ez component in MV/m as a function of position on the z axis.

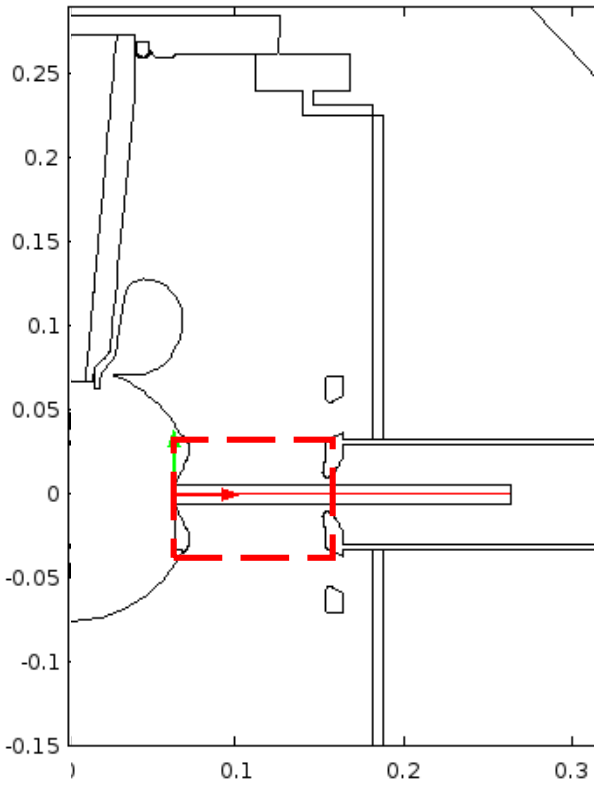

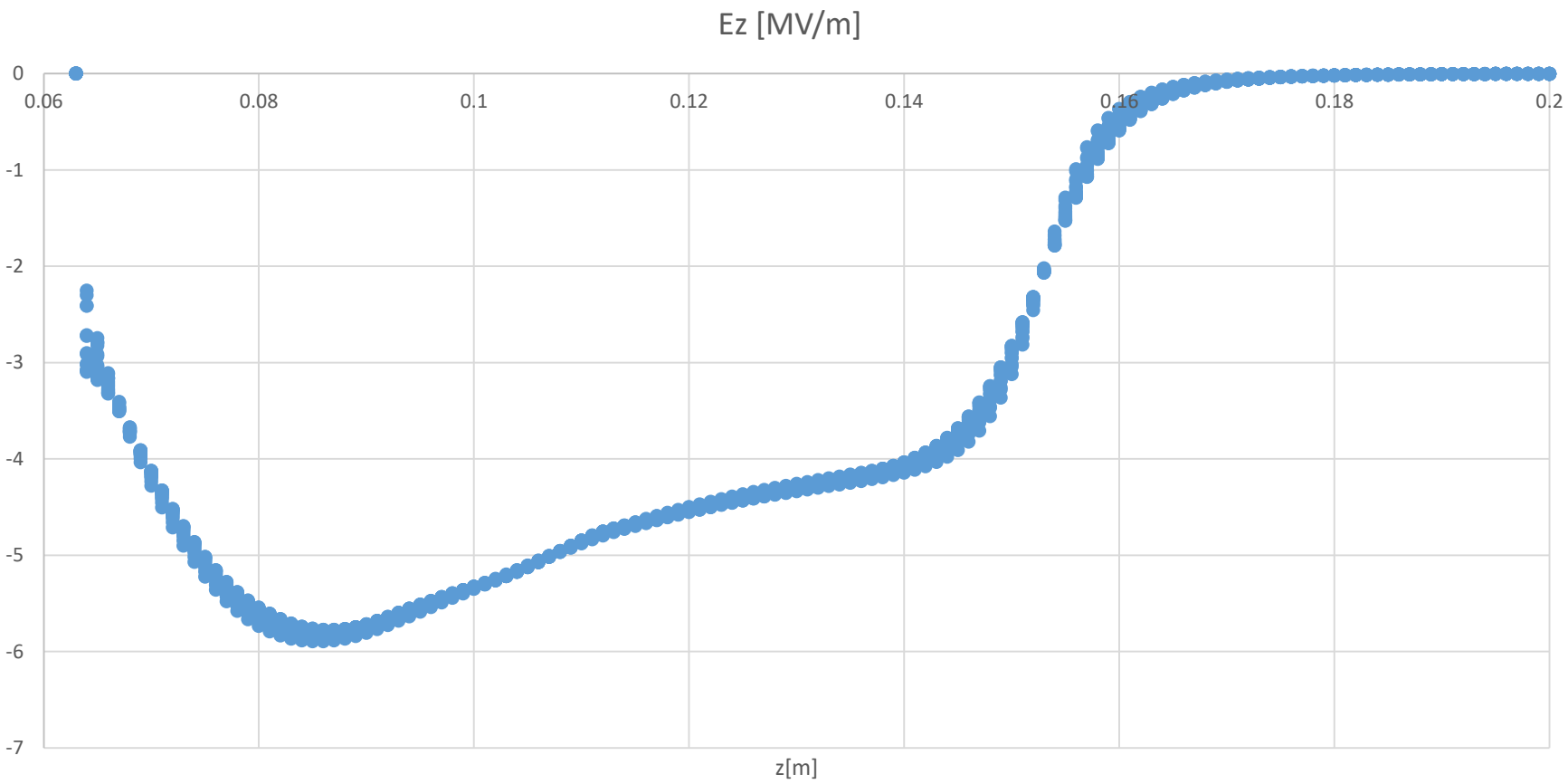

Future steps

- Recalculate for the **white insulator** case and obtain field maps.
- Use to investigate the upper flange triple-point.
- Get fields on the insulator surface for insulator studies.

Fin.

CST frame of reference:

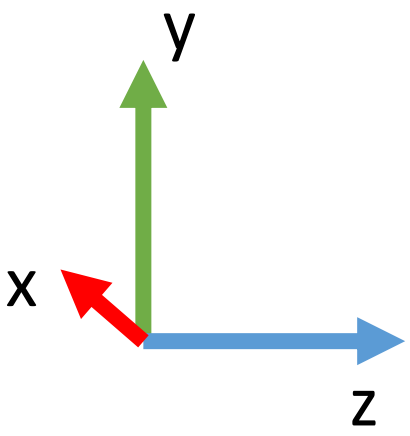

X goes into the page.