GTS gun
CST simulations

Sajini Wijethunga

2/13/2020

Original GTS gun design – Ron's corrected model – with NEGs

-300 kV at the cathode, 0 V at the anode

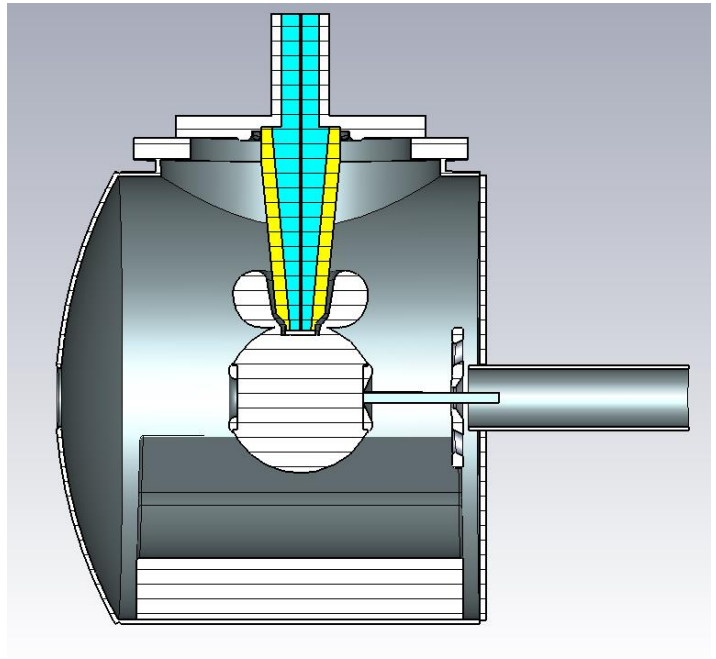

E field

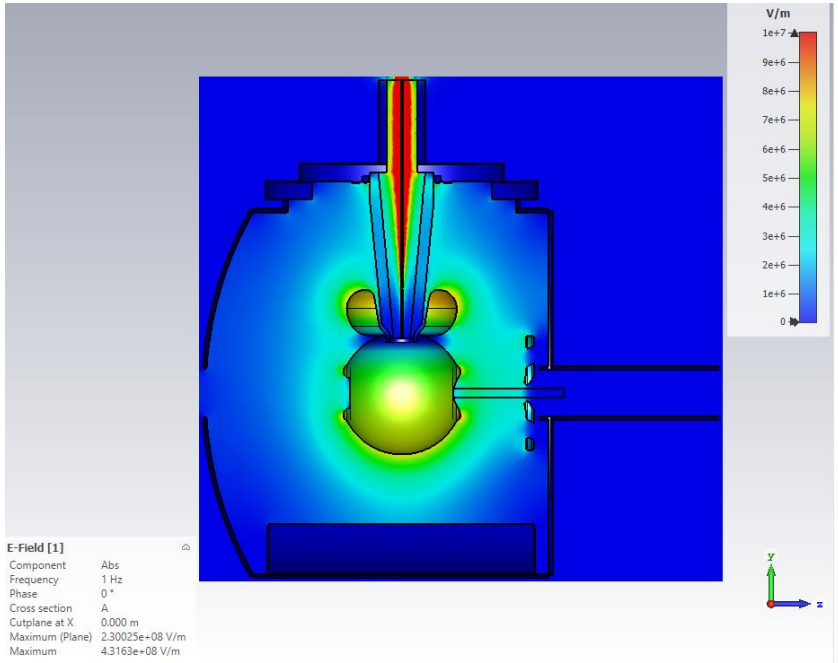

Potential

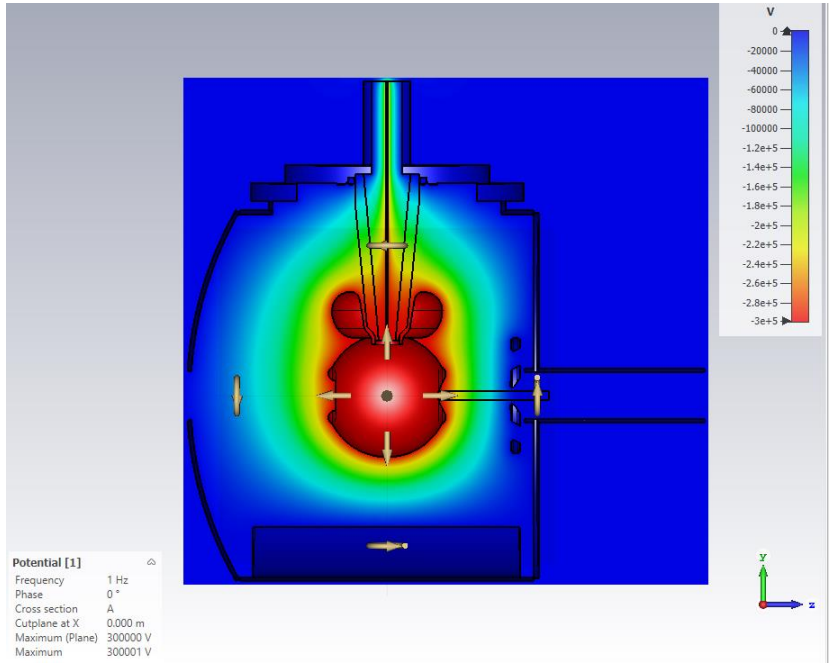

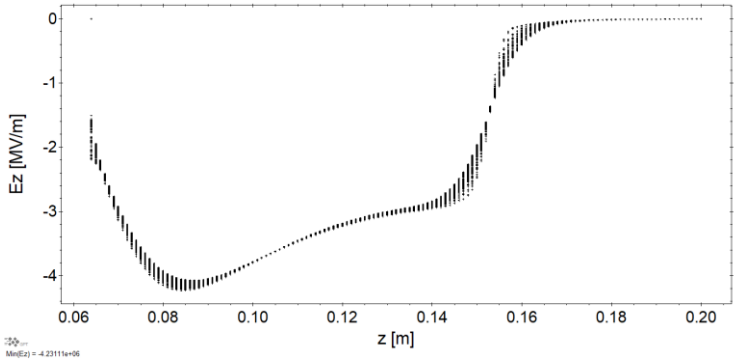

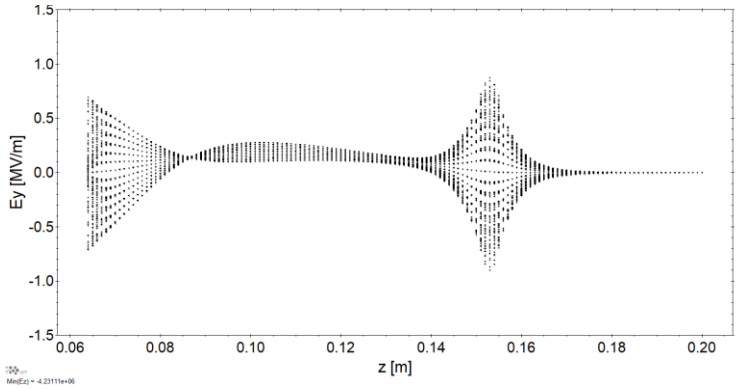

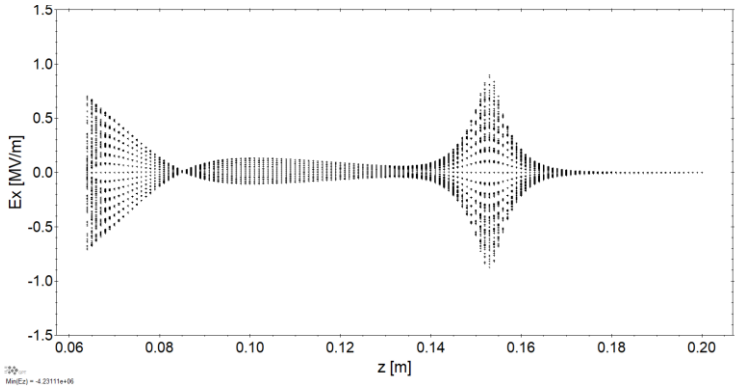

Original GTS gun design – Ron's corrected model – no NEGs

-300 kV at the cathode, 0 V at the anode

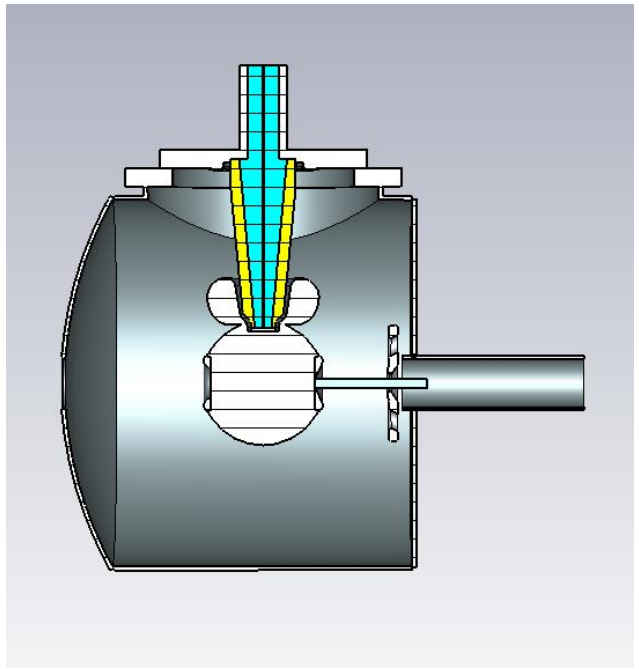

E field

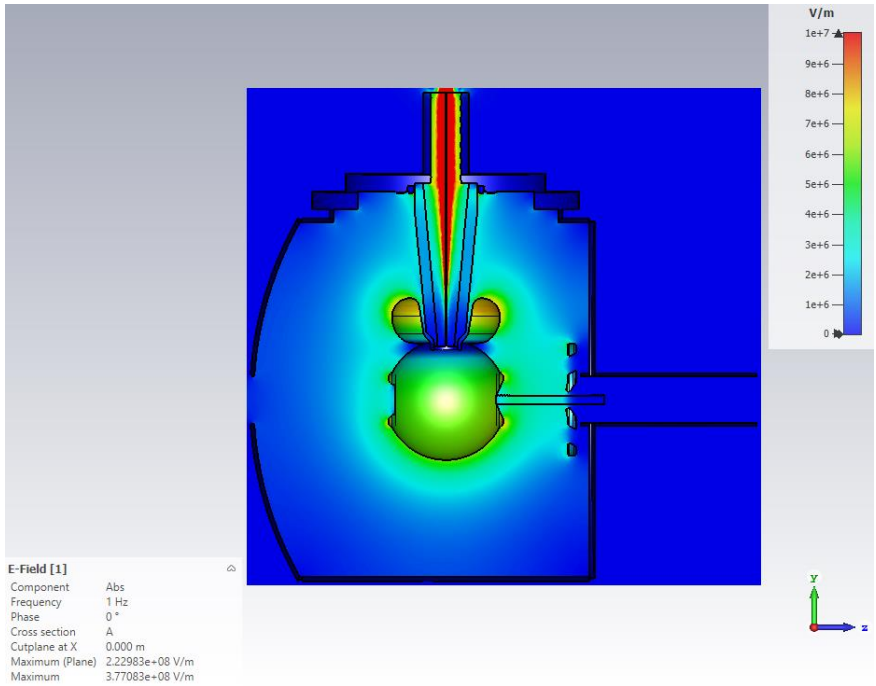

Potential

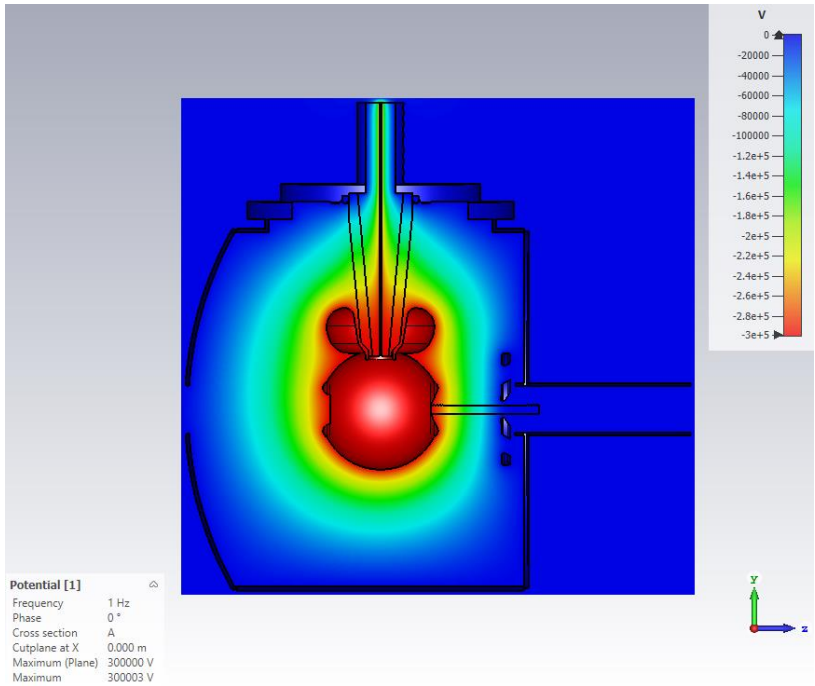

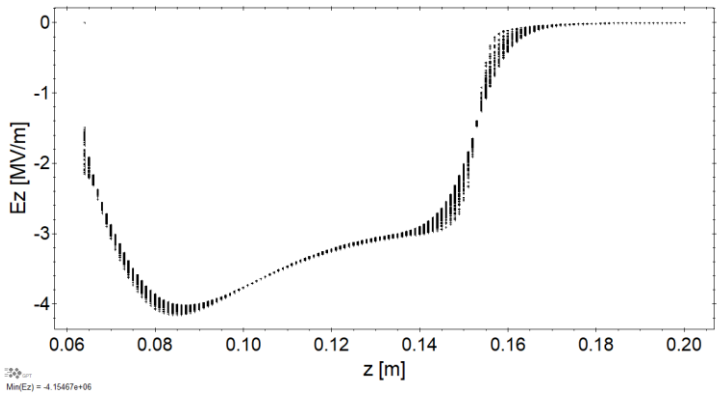

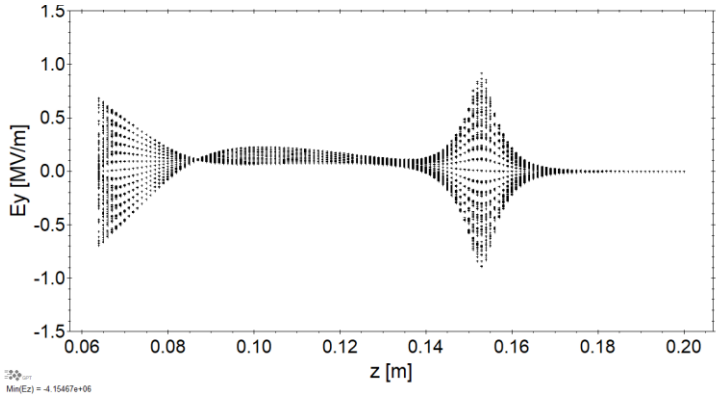

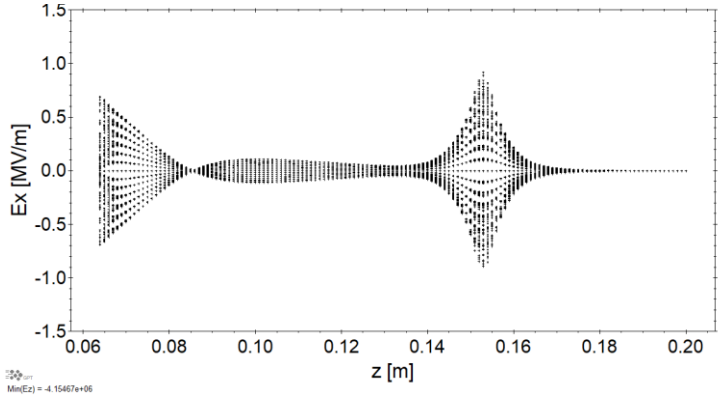

Flat cathode front and flat anode- cathode anode gap 5 cm – no NEGs

-300 kV at the cathode, 0 V at the anode

Beam pipe is not connected to anode.

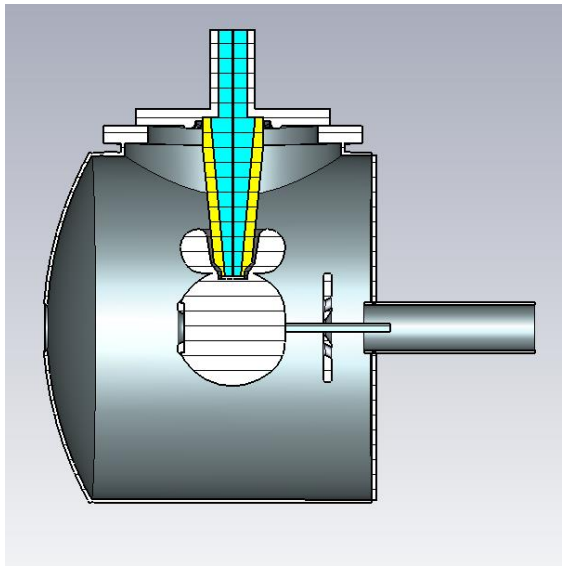

E field

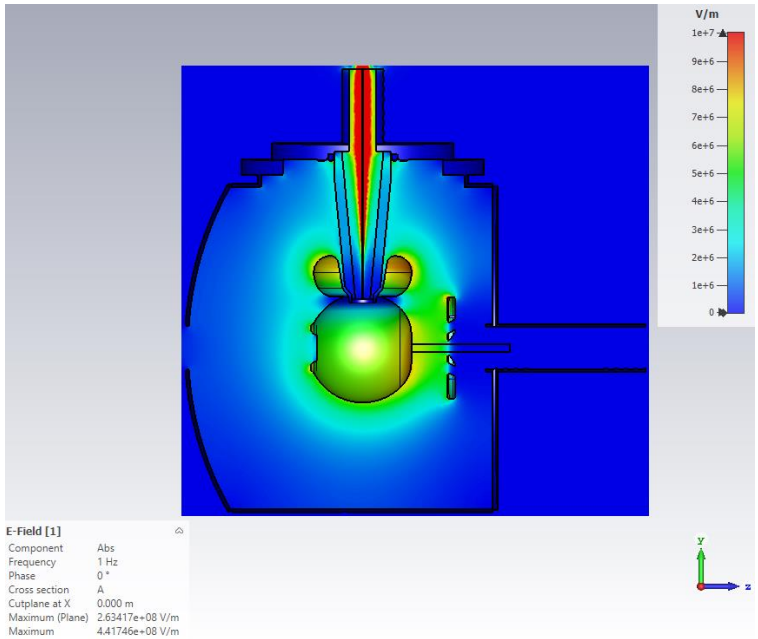

Potential

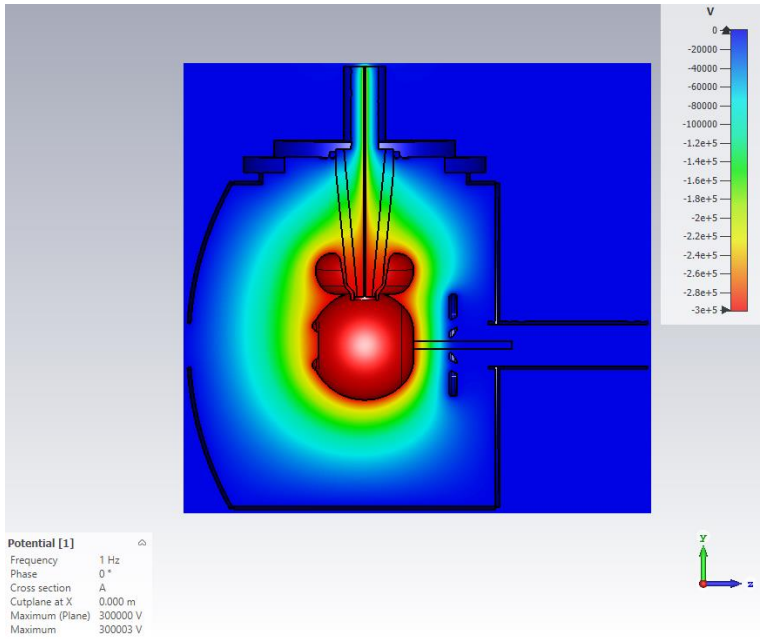

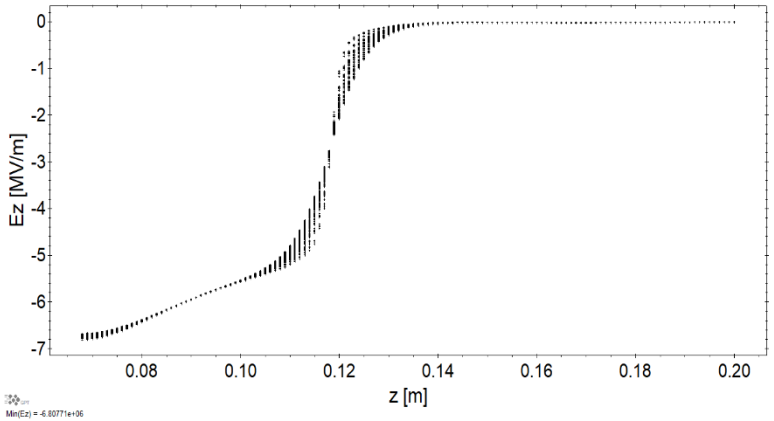

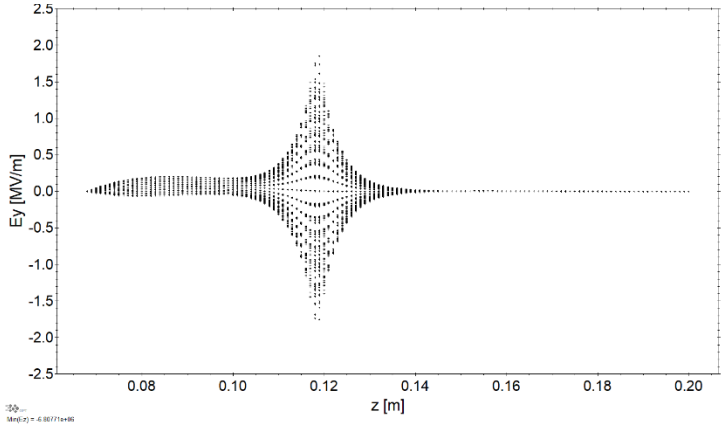

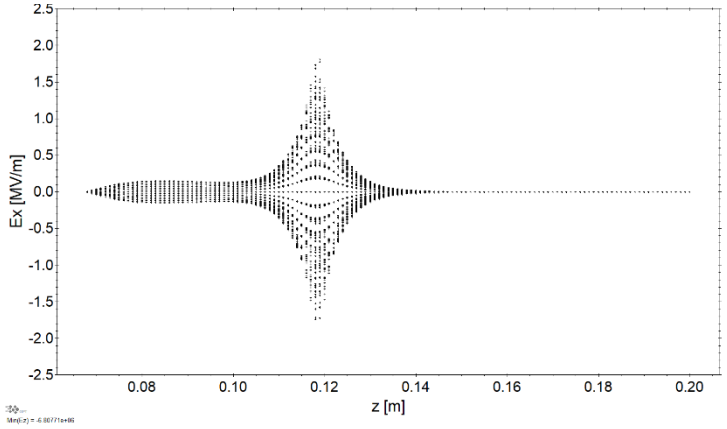

Original GTS gun design – Ron's corrected model

Comparison between with NEGs and without NEGs

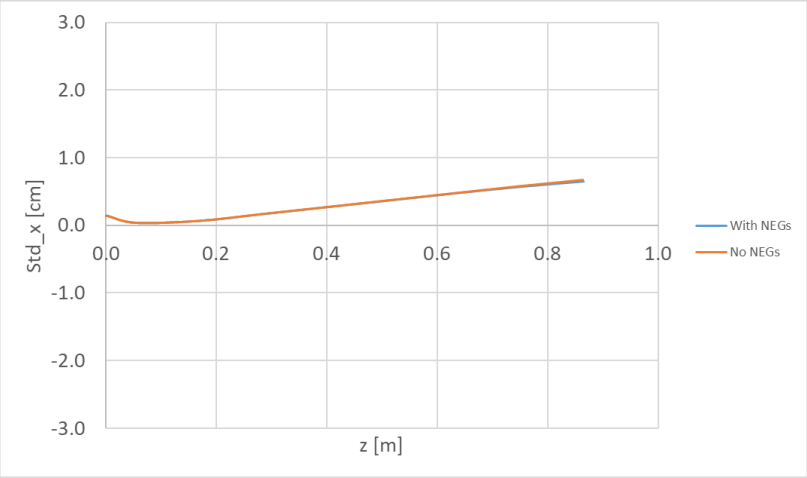

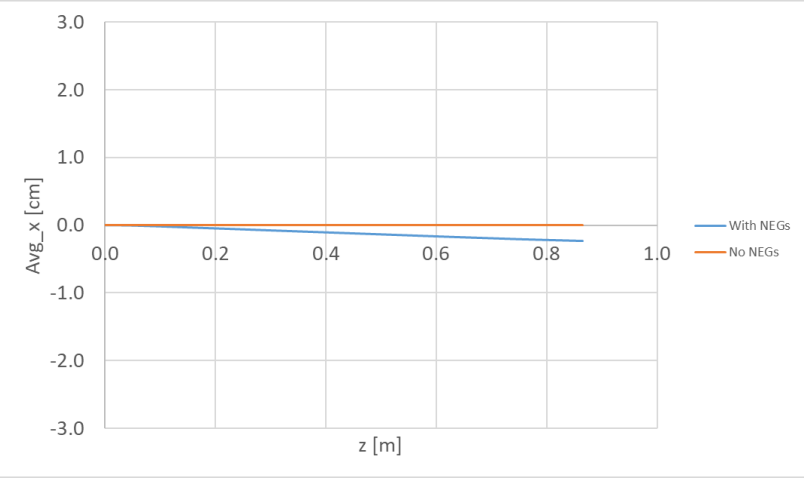

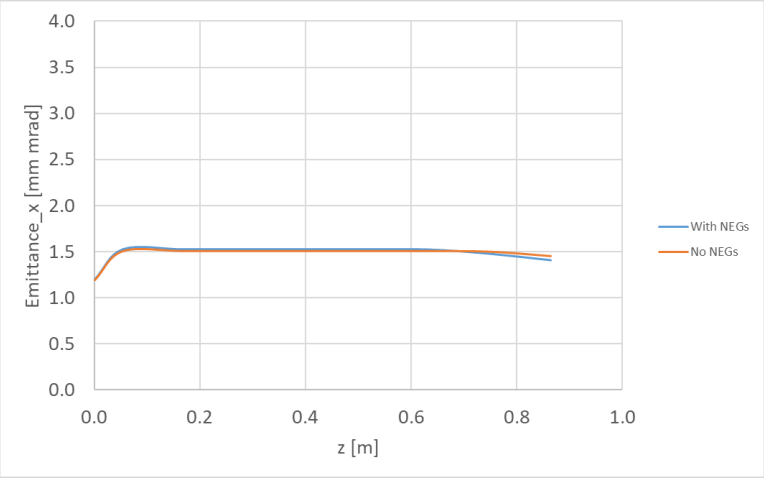

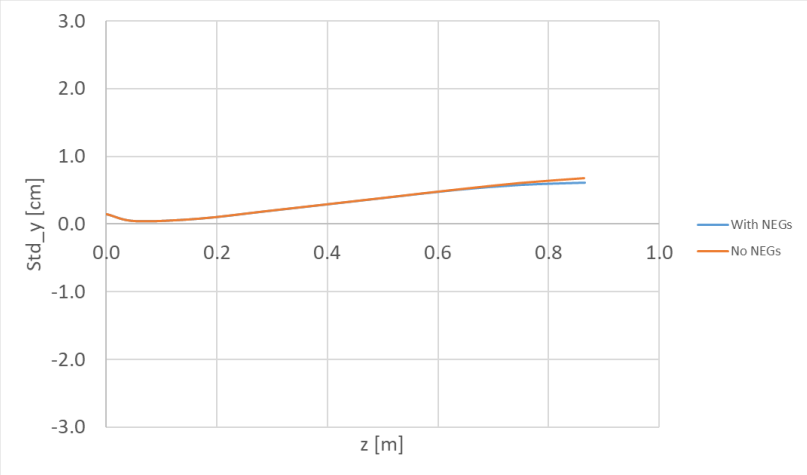

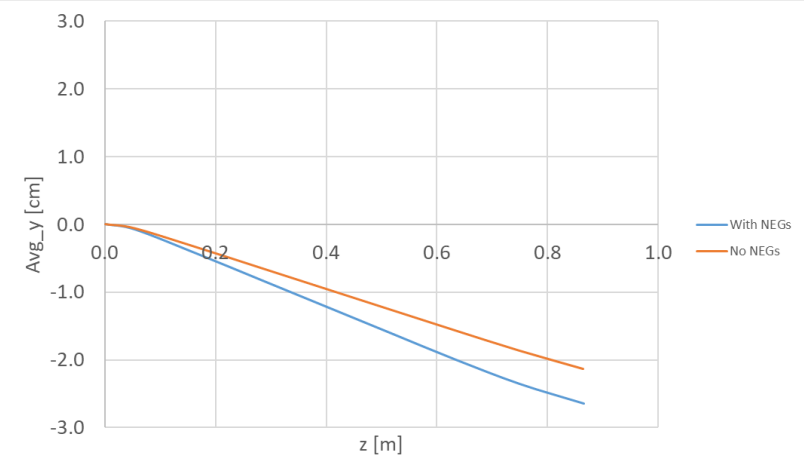

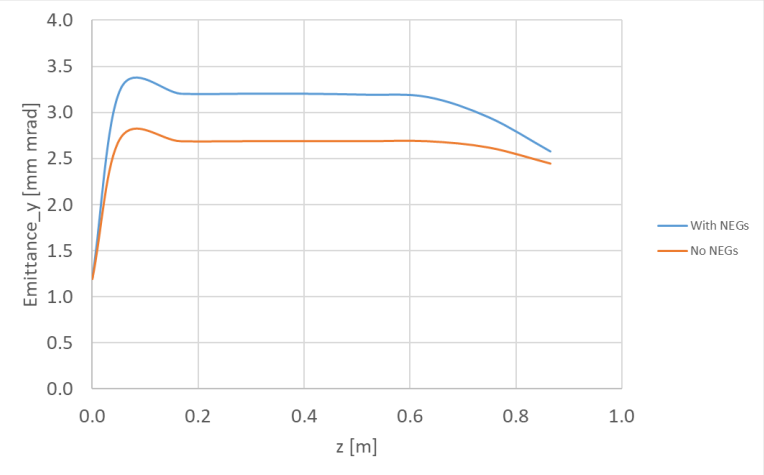

- Without the NEGs beam is on axis in x.
- X and Y emittances are bit off.

Comparison between original design (with NEGs, without NEGs) and flat anode-cathode model

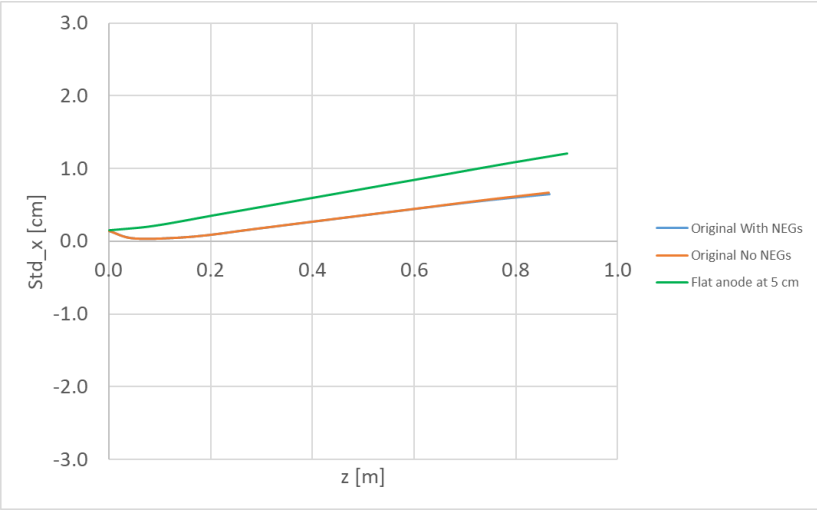

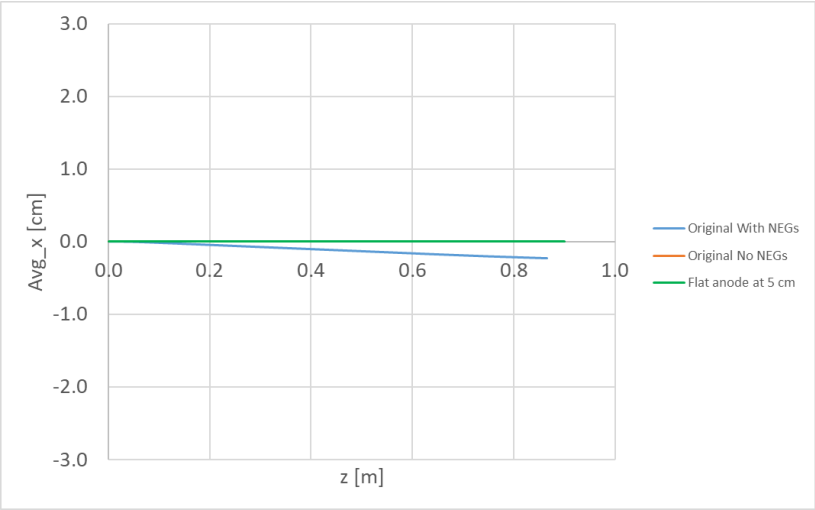

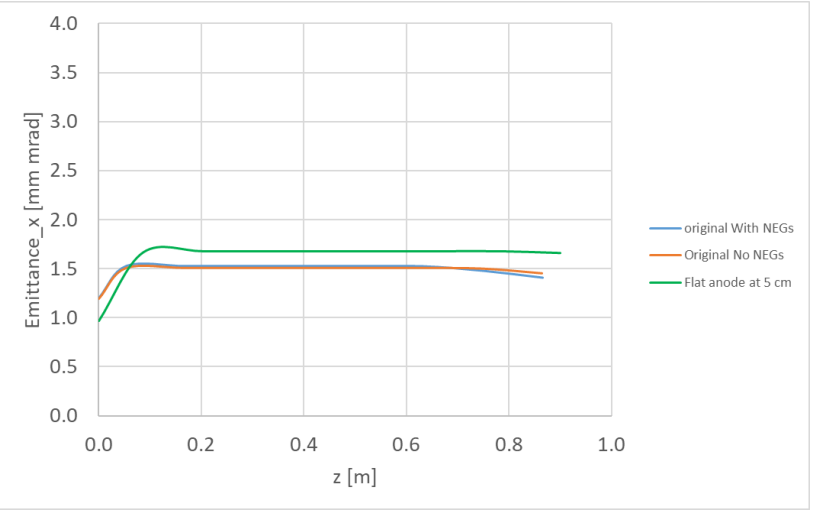

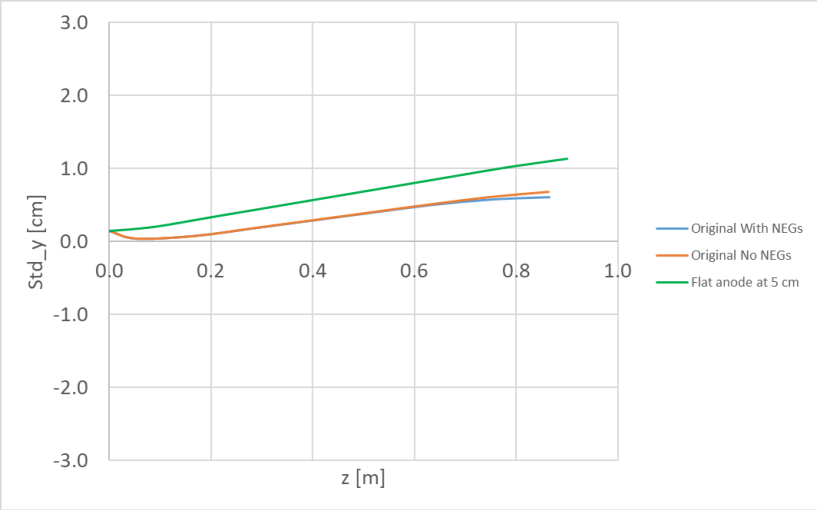

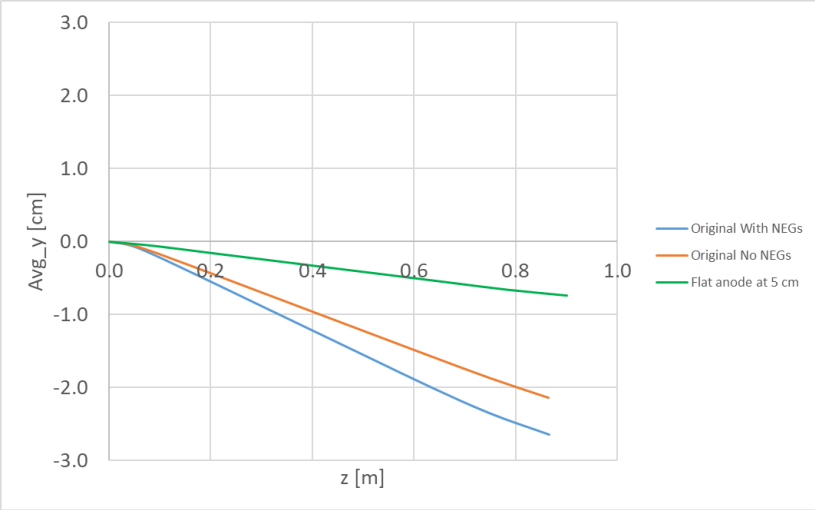

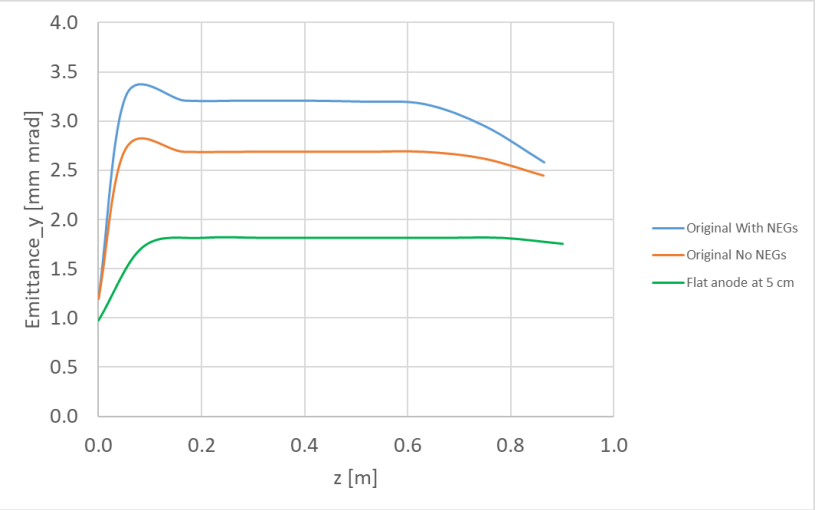

- Beam is more centered in flat anode-cathode model than original model.
- X and Y emittances are almost same in the flat anode-cathode model.

Flat cathode front and flat anode- cathode anode gap 5 cm – no NEGs

Suggested designs to connect anode (at 5cm) and beam pipe

Spider model

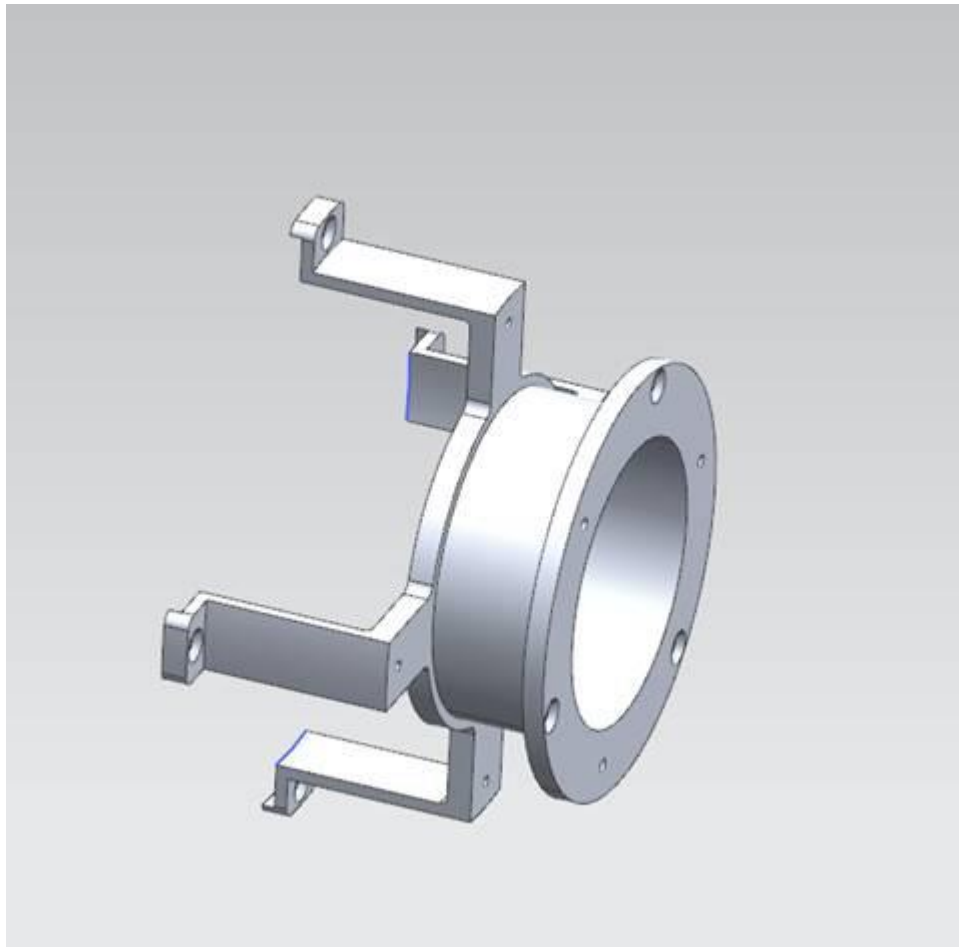

Smaller pipe between anode and actual beam pipe

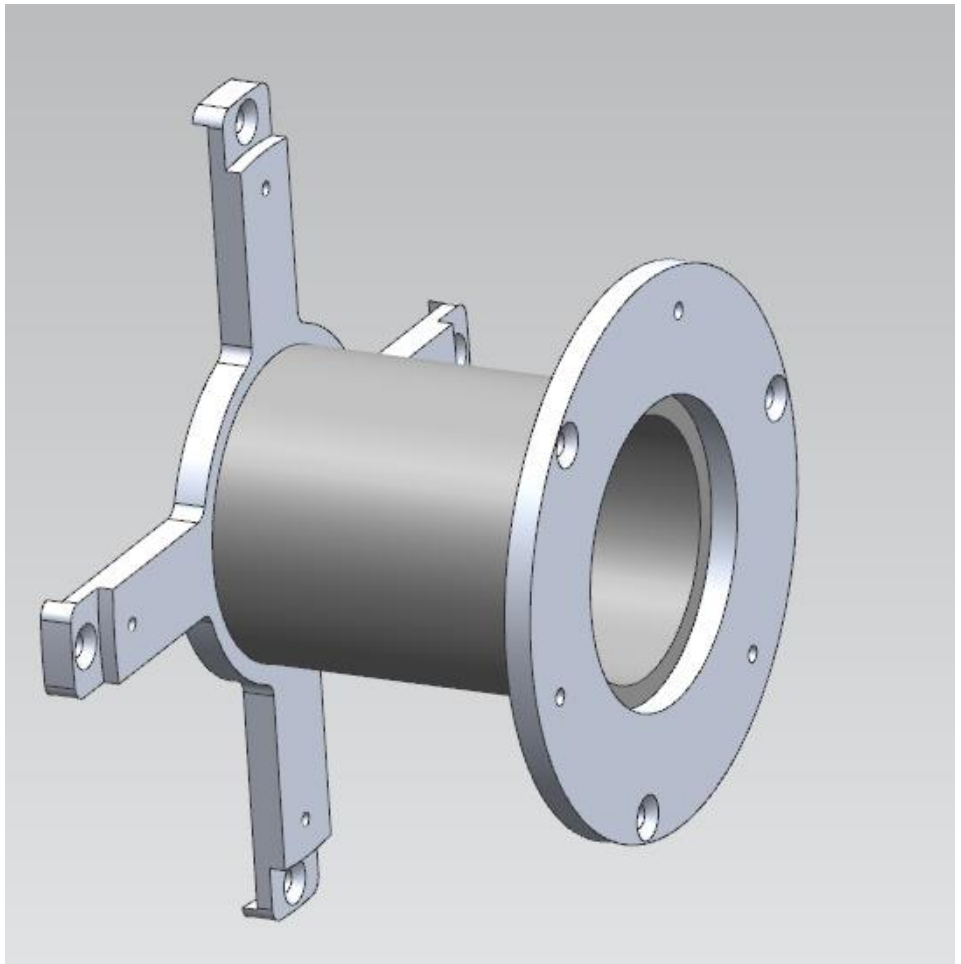

Flat cathode front and flat anode- cathode anode gap 5 cm – no NEGs

Suggested designs to connect anode (at 5cm) and beam pipe

Spider model

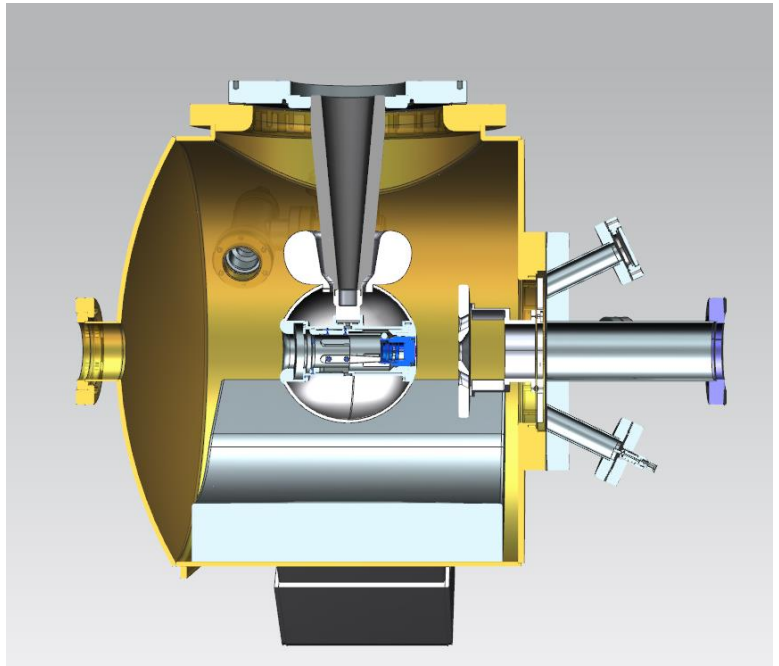

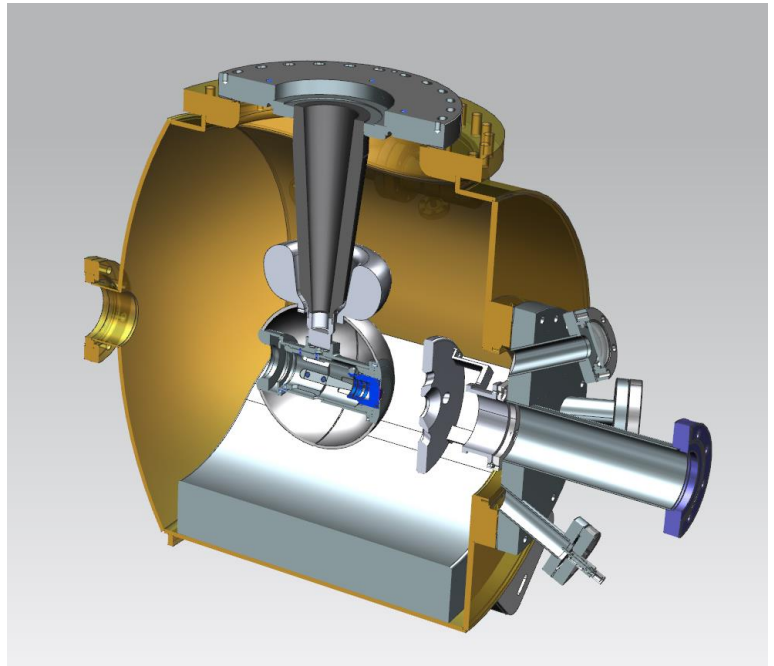

Small pipe model

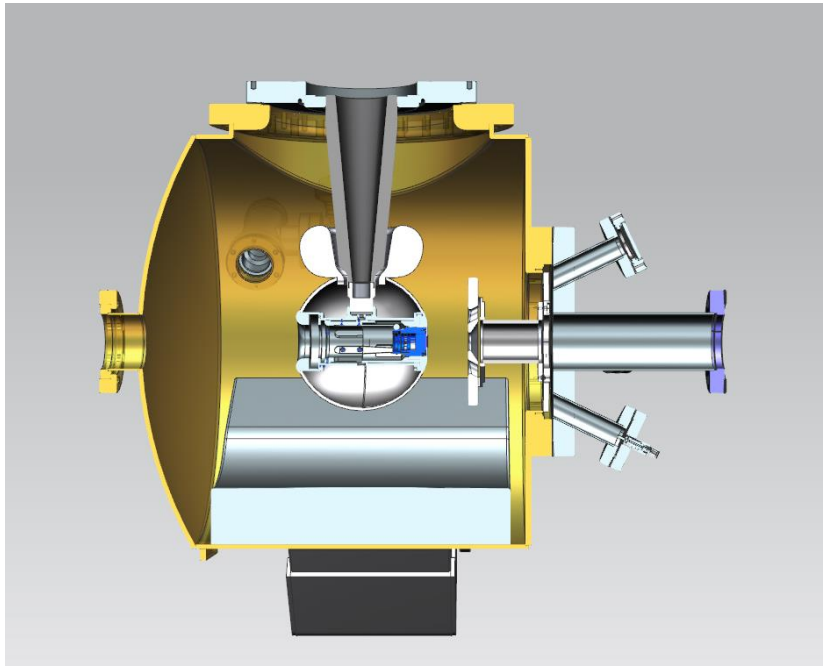

Flat cathode front and flat anode- cathode anode gap 5 cm – no NEGs – Spider model

-300 kV at the cathode, 0 V at the anode

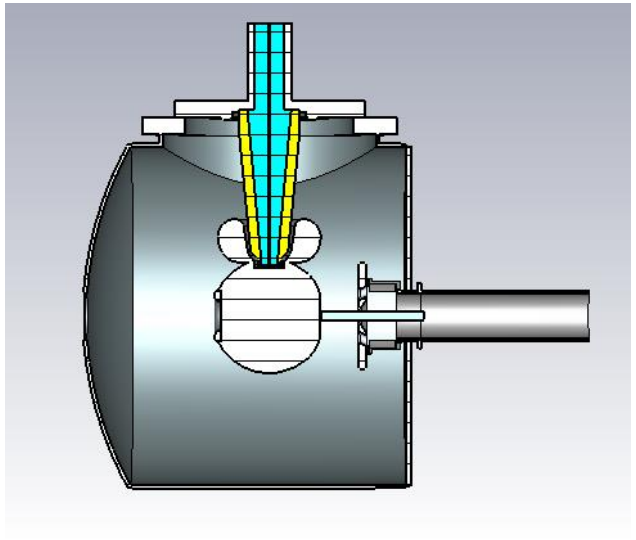

E field

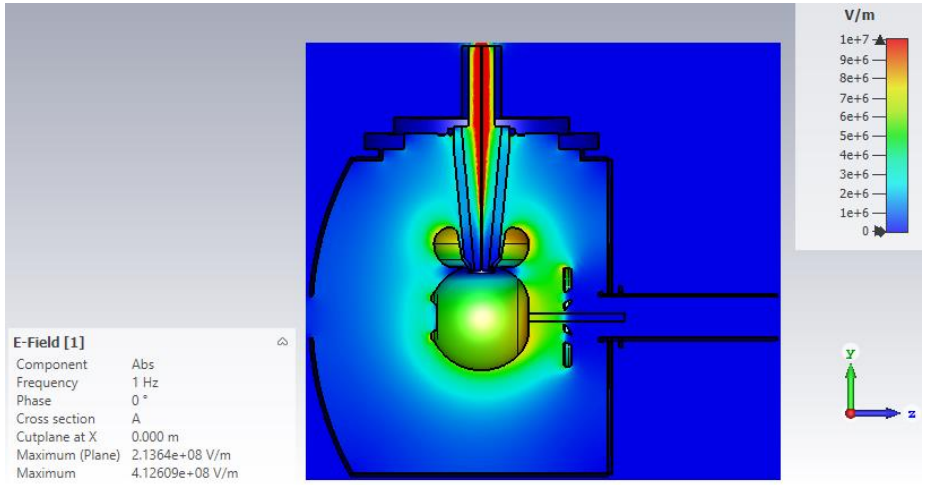

Potential

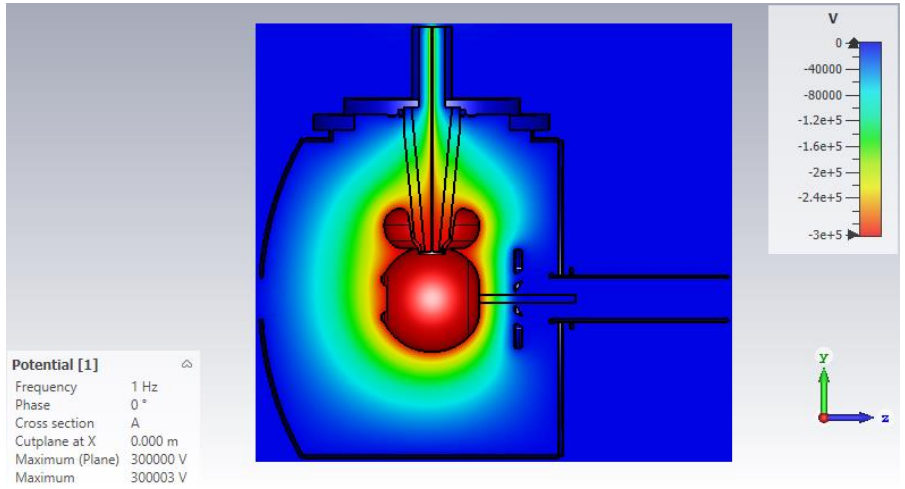

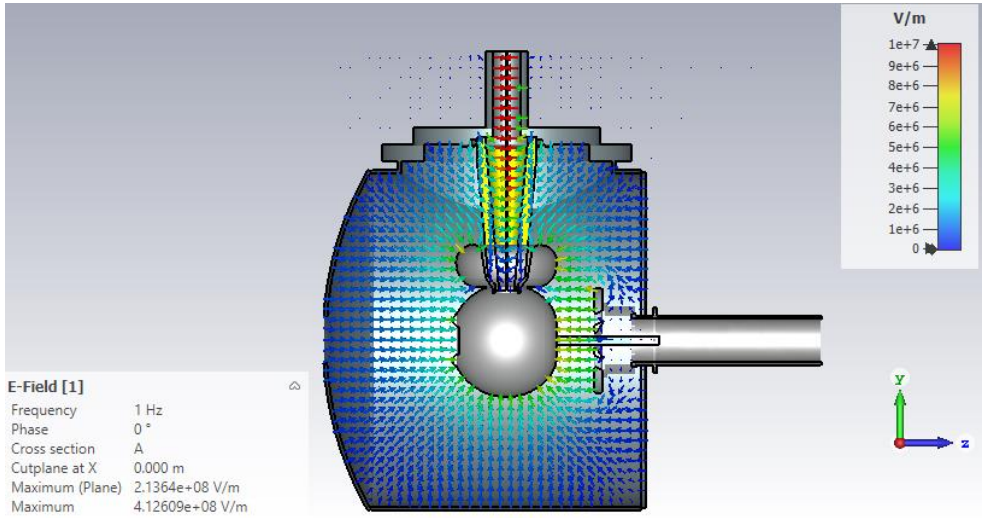

Flat cathode front and flat anode- cathode anode gap 5 cm – no NEGs – Spider model

-300 kV at the cathode, 0 V at the anode

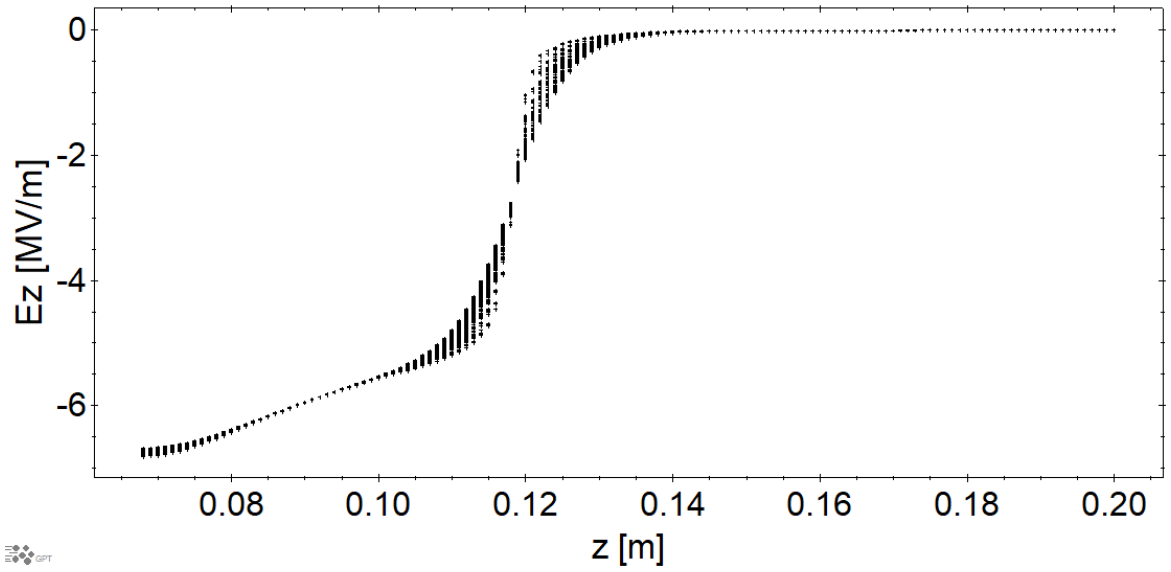

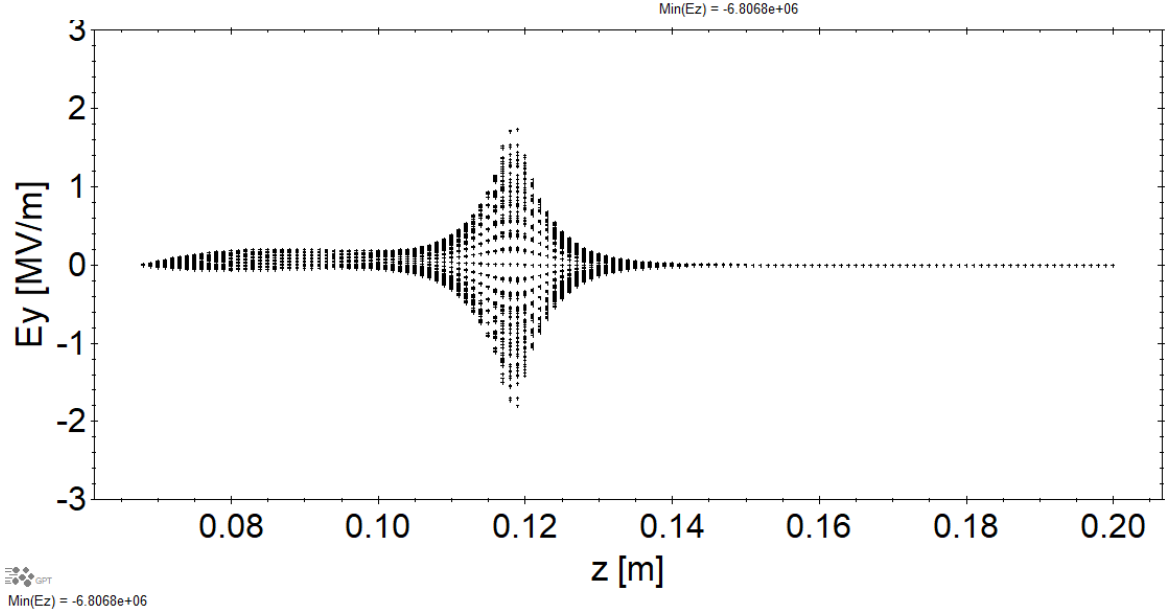

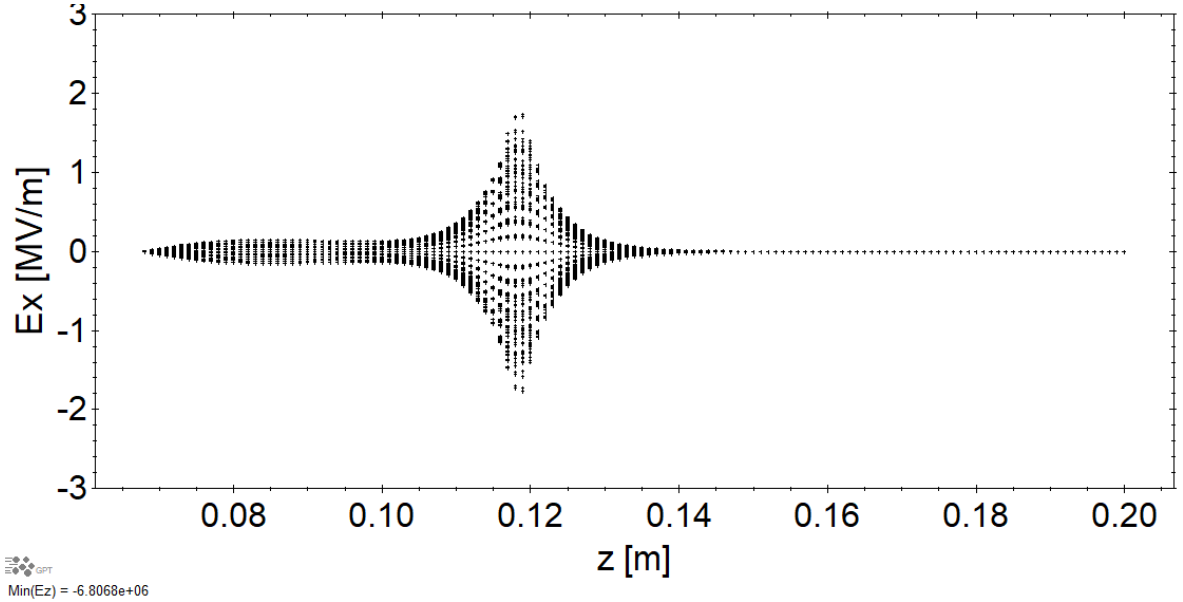

Flat cathode front and flat anode- cathode anode gap 5 cm – no NEGs – Small pipe model

-300 kV at the cathode, 0 V at the anode

E field

Potential

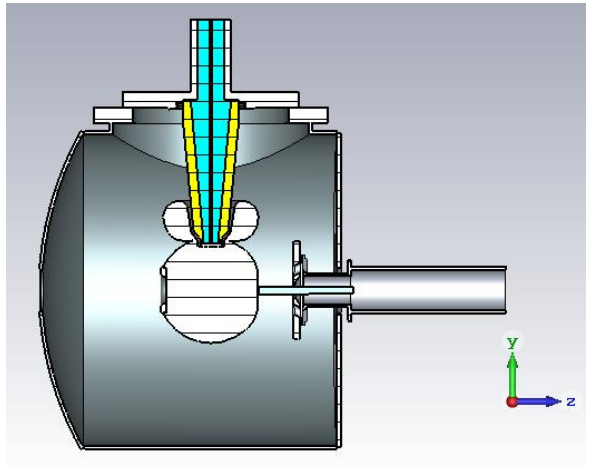

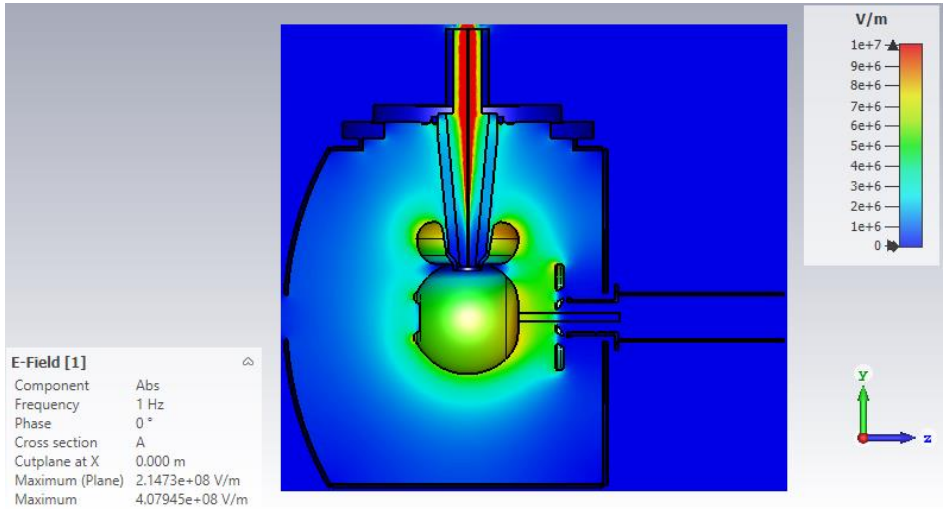

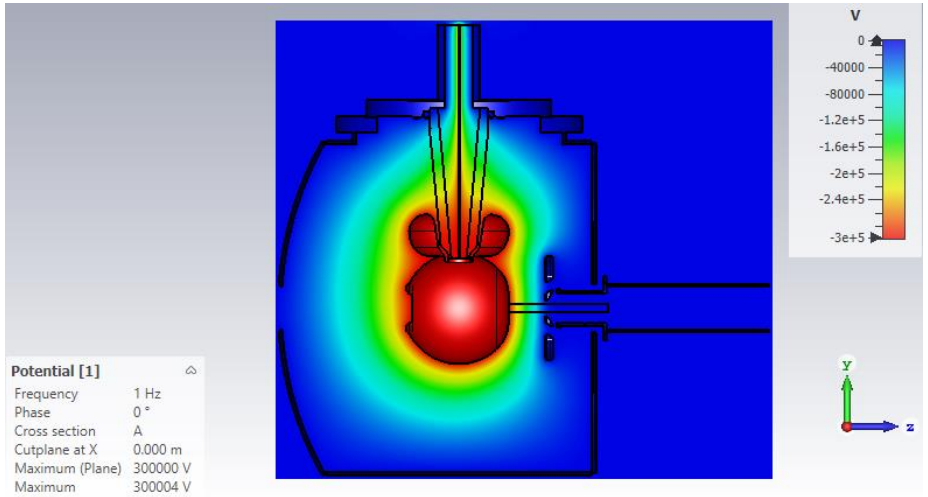

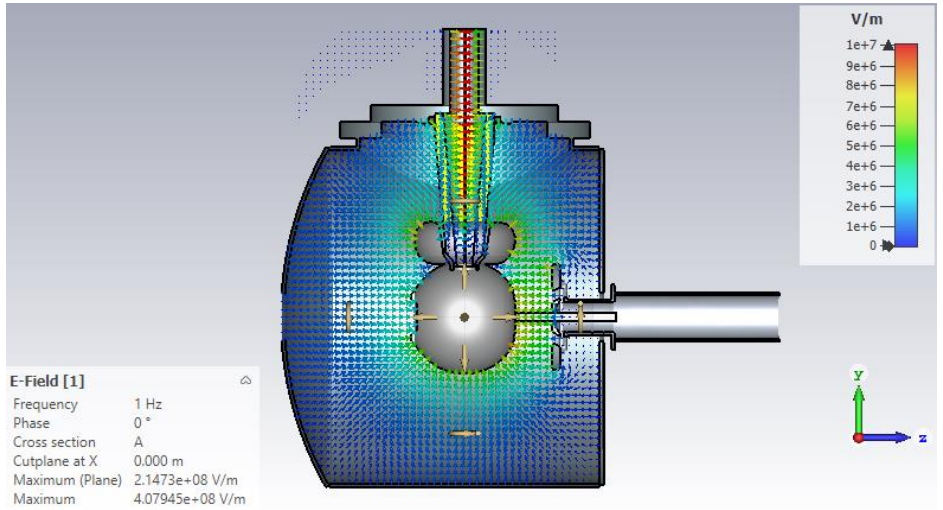

Flat cathode front and flat anode- cathode anode gap 5 cm – no NEGs – Small pipe model

-300 kV at the cathode, 0 V at the anode

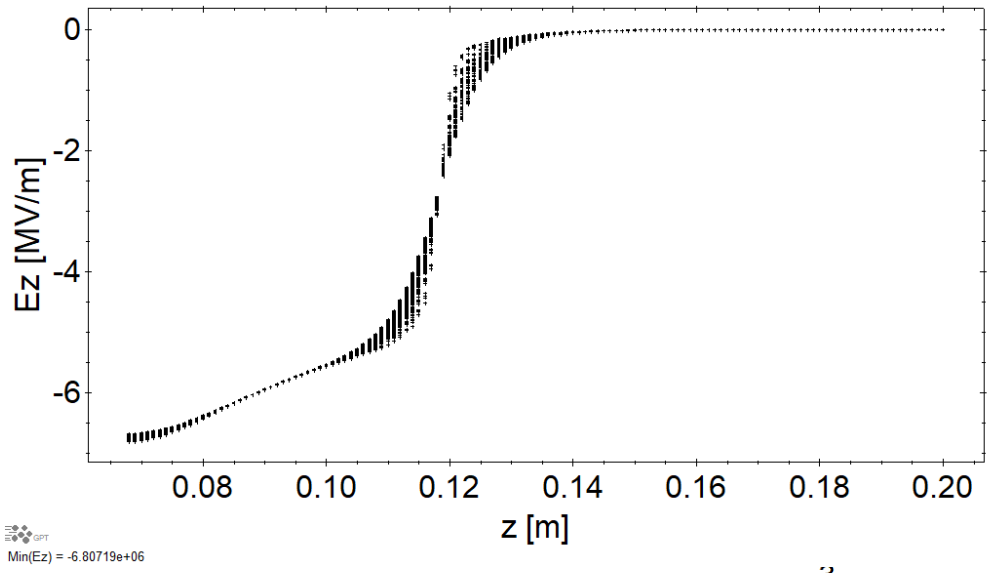

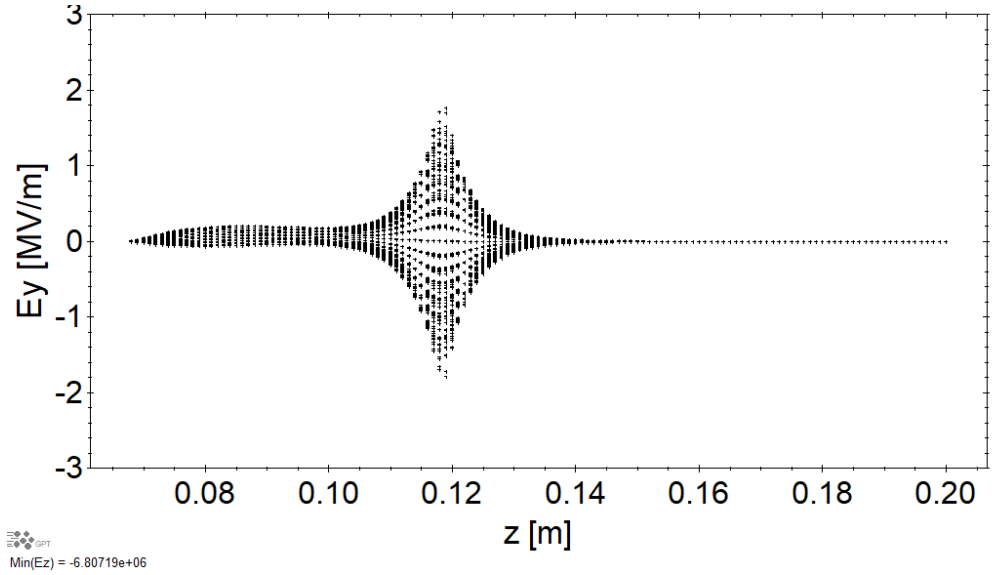

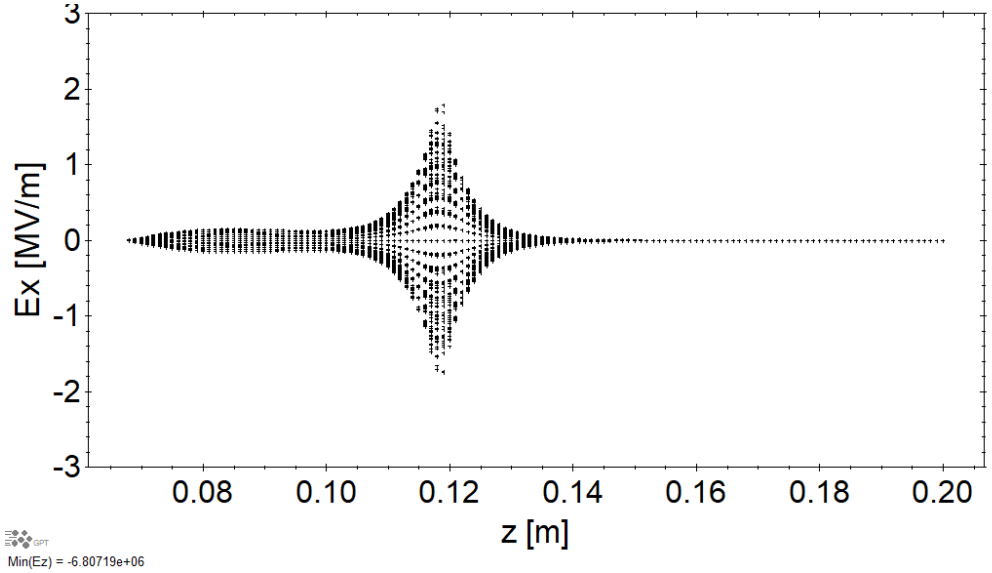

Flat cathode front and flat anode- cathode anode gap 5 cm – no NEGs – Spider model

-300 kV at the cathode, 0 V at the anode

Anode shifted -1.6 mm

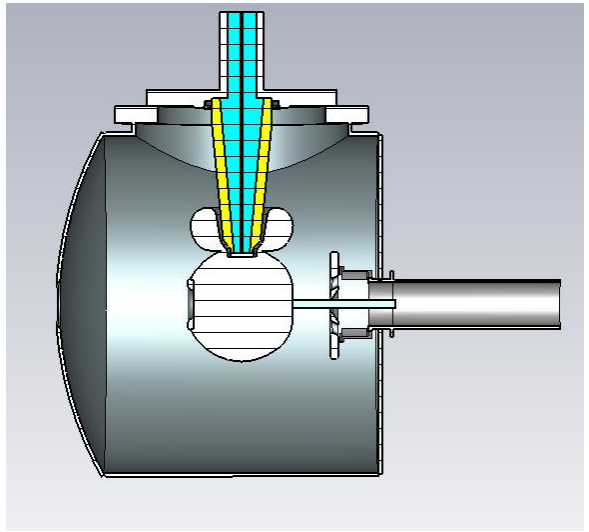

E field

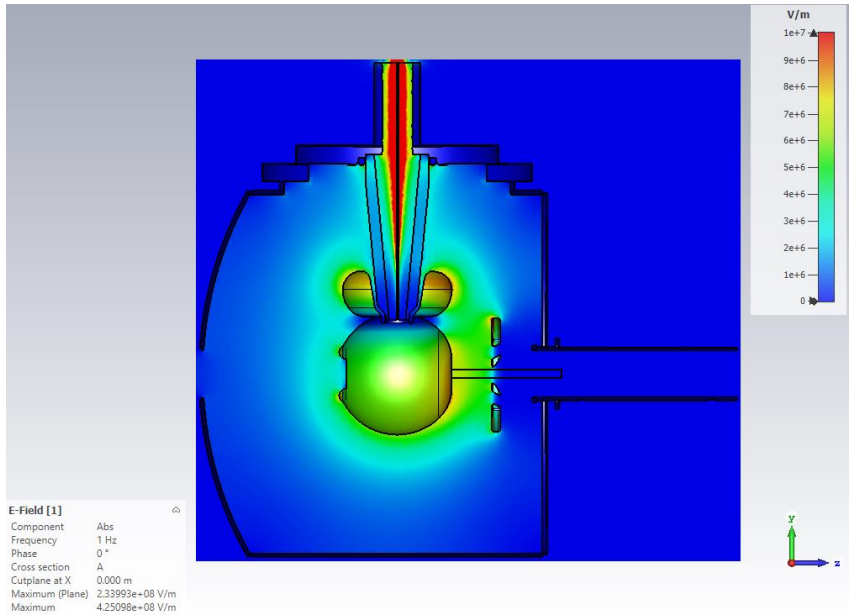

Potential

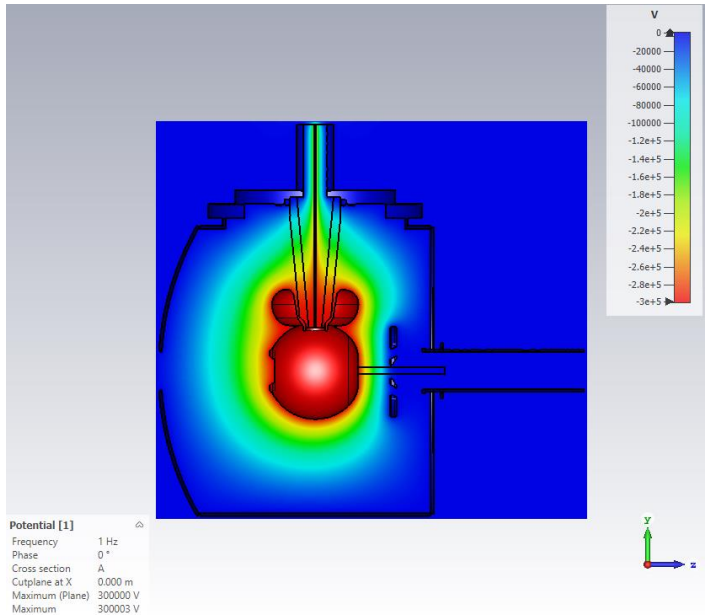

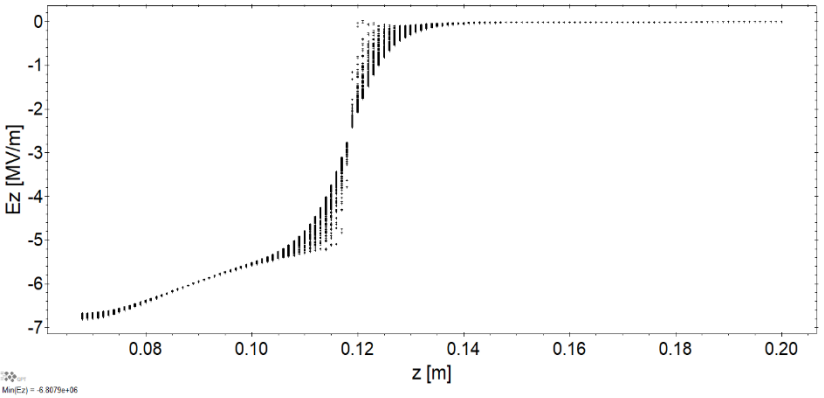

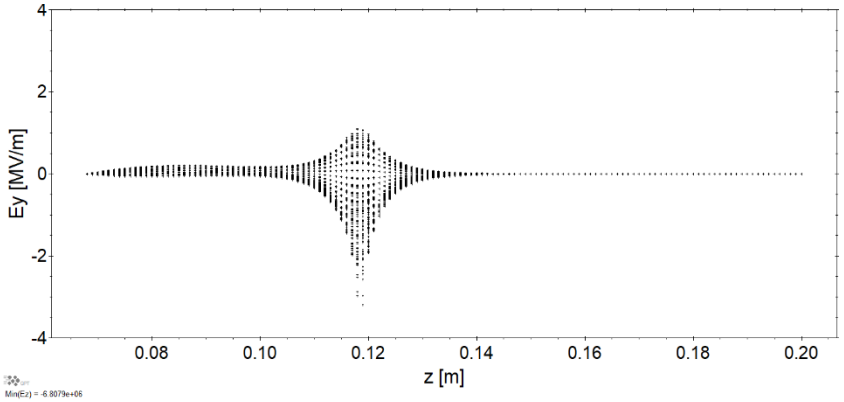

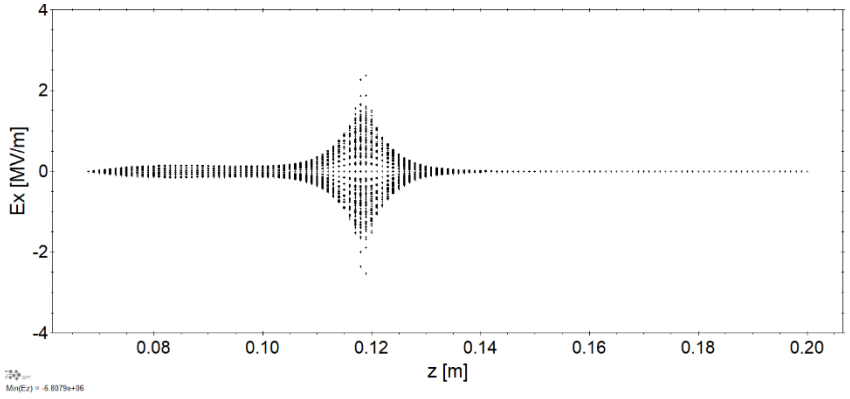

Flat cathode front and flat anode- cathode anode gap 5 cm – no NEGs – Small pipe model

-300 kV at the cathode, 0 V at the anode

Anode shifted -1.6 mm

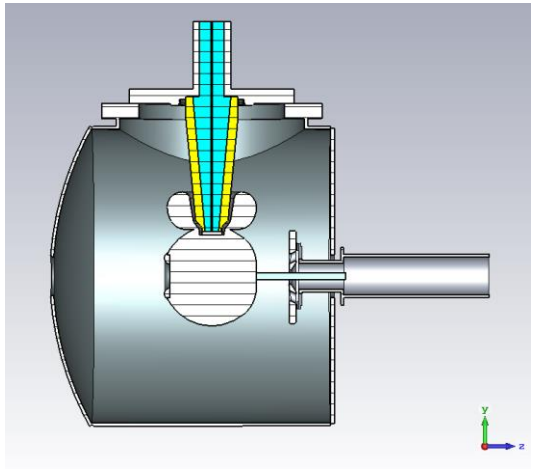

E field

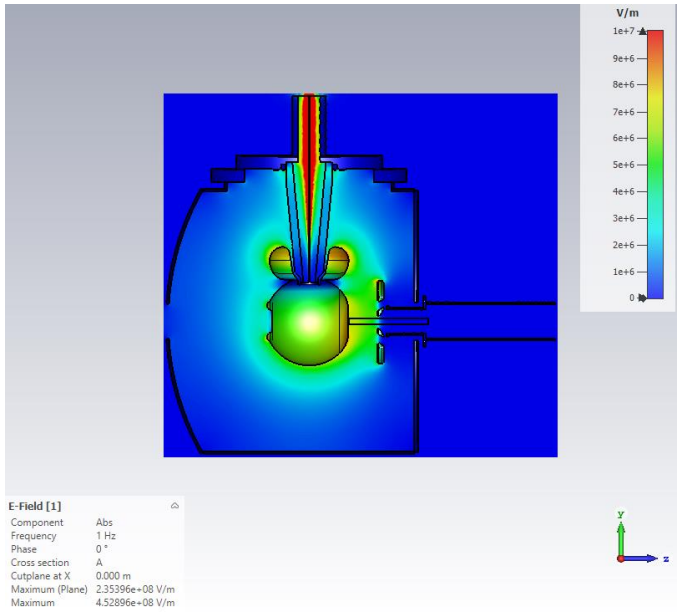

Potential

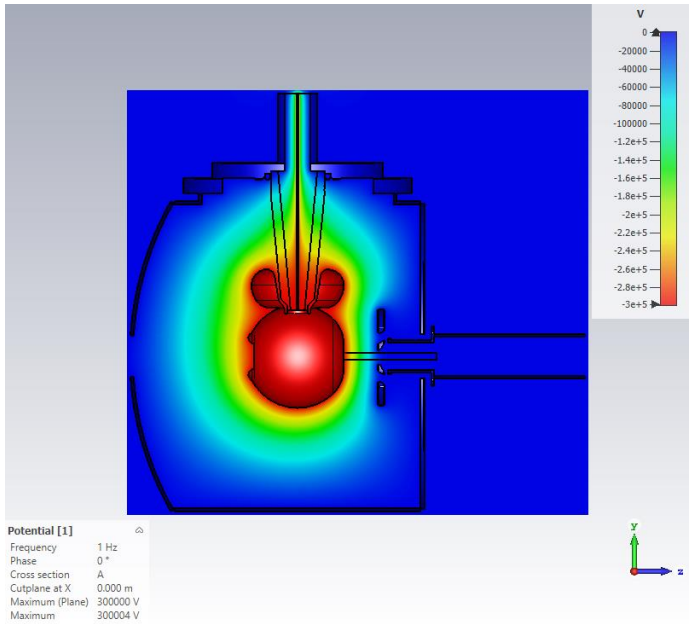

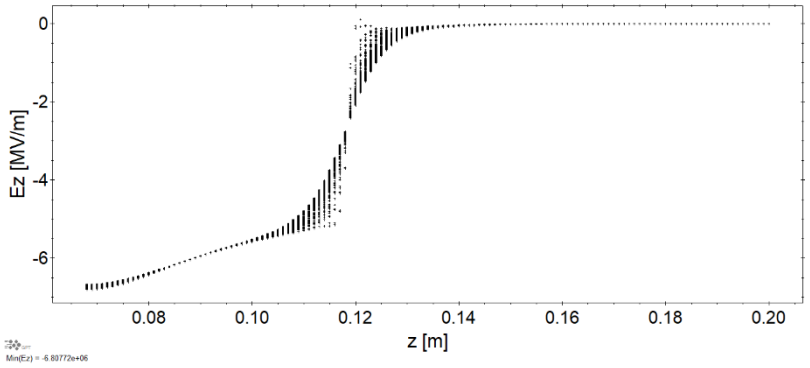

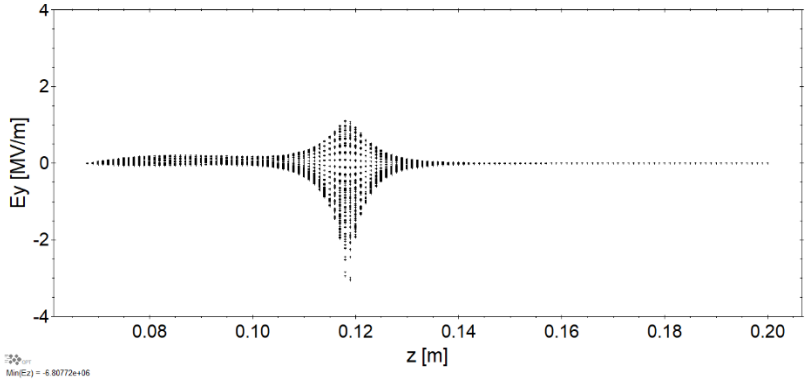

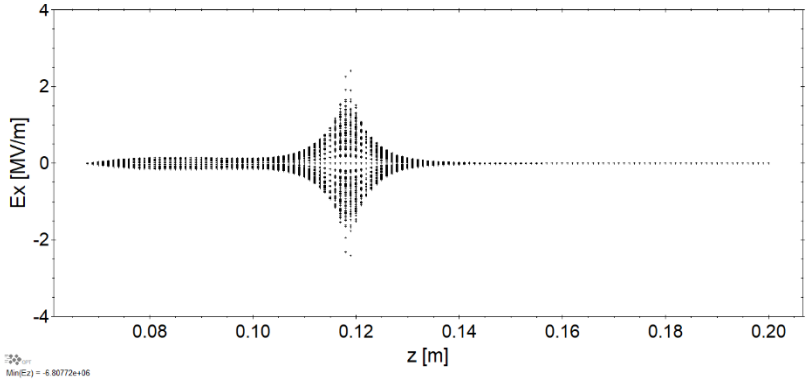

GPT simulations

Simulation Parameters

- Gun HV -300 kV (3D E Field map CST)
- Charge 1 nC
- Gun solenoid off
- Pulse width FWHM-75 ps (Gaussian)
- Rep rate - 50 kHz
- Laser Spot size (rms)-1.5 mm (Gaussian)
- Accuracy- 6.5
- Space charge calculation off
- Beamline distance – 2 m
- Beam pipe radius included
- Focusing solenoids are off
- Correctors are off

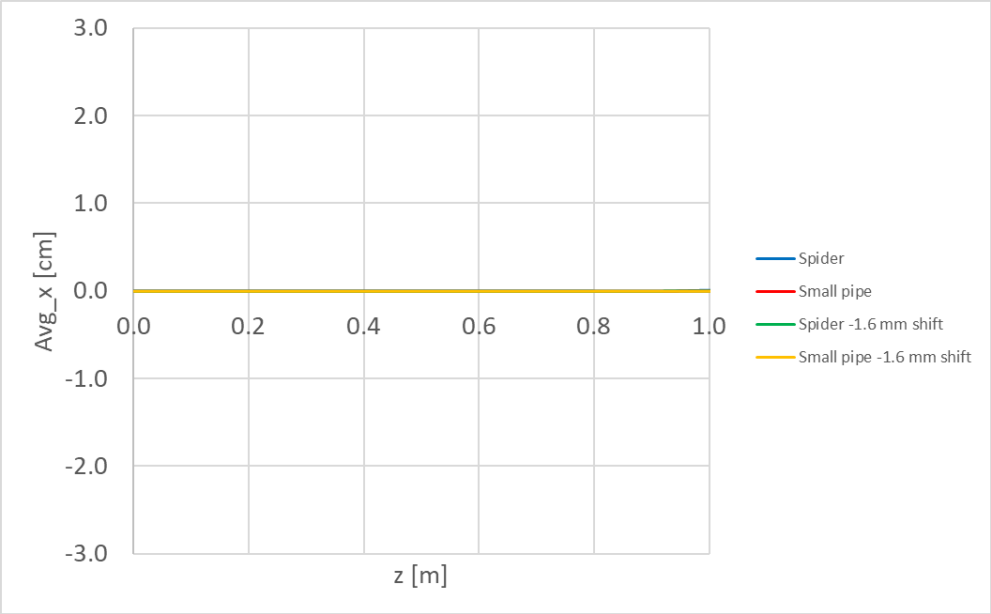

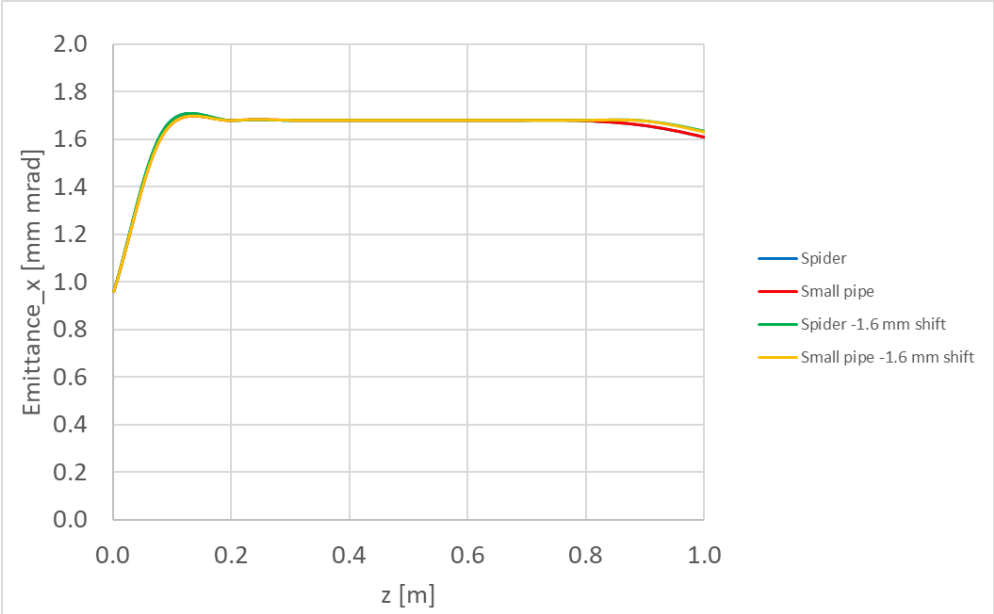

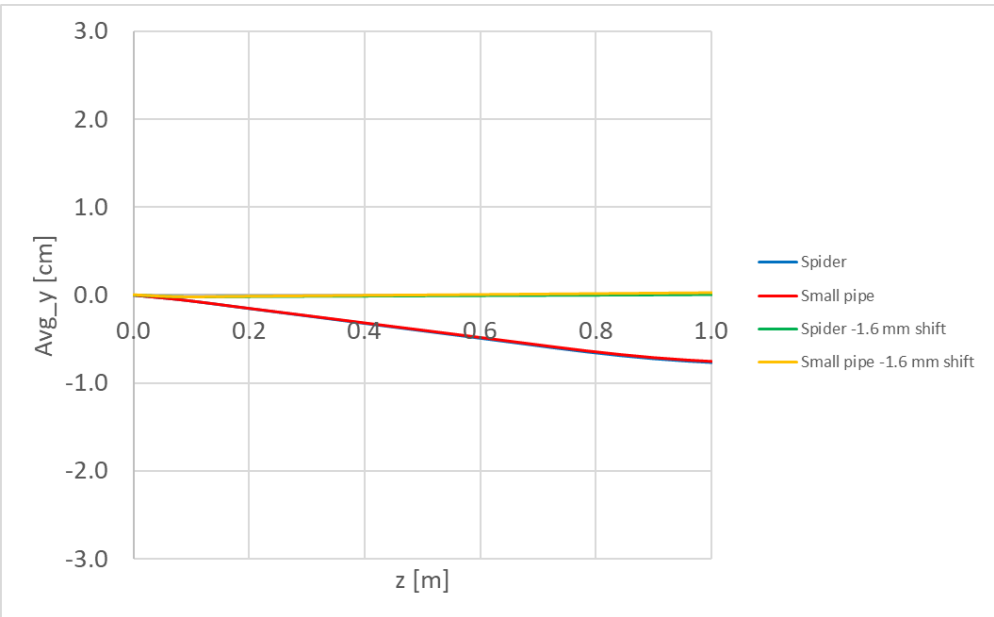

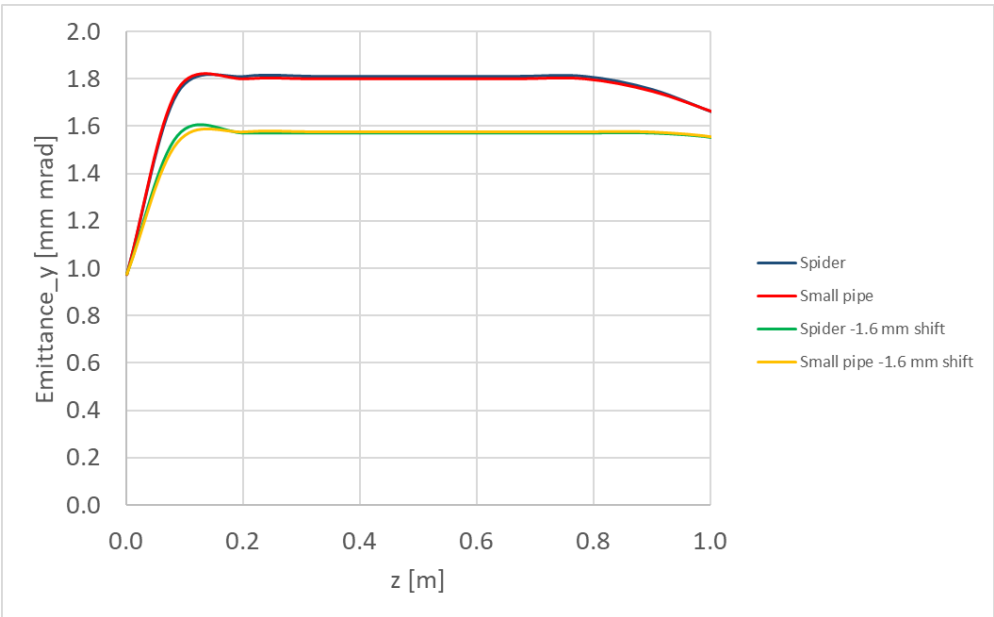

Emittance_y is better with the -1.6 mm shifted anode.