NUCLEAR INSTRUMENTS AND METHODS 145 (1977) 279-282 ; © NORTH-HOLLAND PUBLISHING CO.

VELOCITY SELECTOR FOR HEAVY-ION SEPARATION*

M. SALOMAA and H. A. ENGE

Massachusetts Institute of Technology, Cambridge, Massachusetts 02139, U.S.A.

Received 4 April 1977

A velocity selector with an electric field strength of 0–40 kV/cm and a magnetic field strength of 0–4000 G has been designed for the purpose of separating heavy-ion reaction products, particularly from fusion reactions. The instrument has been installed at the Tandem Facility of the Brookhaven National Laboratory and is being used mostly in conjunction with a magnetic spectrograph to produce an energy–mass spectrograph (EMS) described in full in the preceding paper.

1. Introduction

Velocity selectors (also called $\boldsymbol{E}\times\boldsymbol{B}$ filters, mass filters, or Wien filters) have been used in high energy physics for many years through the practically bygone era when the particle velocities in high energy physics still were distinguishable from the velocity of light. The device has also been employed in mass spectroscopy[1]) but has found little or no use in nuclear structure work, at least not in particle spectroscopy.

The mass filters, so called in high energy terminology, employ electric fields typically of the order of 60 kV/cm and magnetic fields of the order of 200 G producing zero deflection for a particle with velocity $v = 3\times10^8$ m/s, i.e., the velocity of light. A velocity filter for mass spectroscopy typically is required to separate particles with $\beta = v/c \approx 10^{-3}$, and operate with electric fields of the order of 1500 V/cm, and magnetic fields of the order of 5000 G.

In charged particle magnetic spectroscopy, the kinetic energy and identity of particles emitted from a reaction target can be measured with a ΔE–E counter telescope or with a magnetic spectrograph determining p/q, and a focal plane detector performing the identification of the particle. In many heavy-ion reactions there is a great profusion of particles emerging from the target, and the particle identification by a gas or solid state detector often becomes difficult or impossible. In addition, in many of these reactions the majority of reaction products are emitted in a forward direction close to the beam, and one needs to separate these products from the much more intense beam. Time-of-flight techniques have been used very successfully to separate reaction products where a mass resolution of 1% or poorer suffices. A velocity filter, as discussed in this paper and the preceding one, can relatively easily provide a velocity resolution of 1/500. Coupled with a correspondingly accurate determination of either energy or momentum, this yields a mass resolution of that order of magnitude. Velocities of fusion products, in particular, produced in heavy-ion reactions are typically of the order of 10^7 m/s ($\beta = 1/30$). Typically, field strengths of the order of 40 kV/cm and 4 kG are needed for separating these species. The ratio of field strengths thus falls somewhere between those used in high energy physics and those used in mass spectroscopy. The required field strengths are closer to those used in cyclotron beam extractors.

2. Ion optics

A particle moving with a velocity v through the selector will experience a force given by

$$\boldsymbol{F} = q(\boldsymbol{E}+\boldsymbol{v}\times\boldsymbol{B}). \tag{1}$$

Assume that the electric field is directed along the x-axis, the magnetic field along the y-axis, and that the particle is moving in the z-direction. The particle will then be undeflected if it has a velocity

$$v_0 = E/B, \tag{2}$$

independent of the charge q of the particle. We have tacitly assumed that the length of the electrostatic deflector is equal to the length of the region of magnetic field; or more generally, that the distribution of the electric field and the magnetic field everywhere is the same so that condition (2) is fulfilled also in the fringing field regions. In practice this may not be the case, as discussed in further detail below.

The first-order optics of the velocity selector can be expressed by the conventional matrix equation[2])

* Work supported in part by U.S. Energy Research and Development Administration Contract no. EY-76-C-02-3069.

$$\begin{pmatrix} x \\ \theta \\ \delta \end{pmatrix}_2 = \begin{pmatrix} x/x & x/\theta & x/\delta \\ \theta/x & \theta/\theta & \theta/\delta \\ 0 & 0 & 1 \end{pmatrix} \begin{pmatrix} x \\ \theta \\ \delta \end{pmatrix}_1 . \tag{3}$$

The column matrix indexed 1 expresses the position, direction, and velocity ($\delta = \Delta v/v$) at the entrance of the device; and the column matrix indexed 2 expresses the corresponding parameters at the exit. There is no focusing action by the velocity selector in the y-direction, and the corresponding y-matrix is therefore a free flight matrix.

Assume first that magnetic and electric air gaps are small, so that the entrance and exit fringing field regions are short compared to the length of the device. We call this case the sharp cut-off fringing field (SCOFF) case. The transfer matrix in eq. (3) is then

$$\begin{pmatrix} \cos\alpha & R\sin\alpha & -R(1-\cos\alpha) \\ -R^{-1}\sin\alpha & \cos\alpha & -\sin\alpha \\ 0 & 0 & 1 \end{pmatrix}, \tag{4}$$

where $\alpha = L/R$ with L being the length of the device and $R = mv_0/Bq$. Eq. (4) is identical to the transfer matrix for a sector magnet, with central radius R except for a change of sign for the two terms x/δ and θ/δ.

When the conditions of sharp cut-off fringing field are not fulfilled, some modifications of the optics are in order. The most important is an offset of the center line very similar to that seen in deflecting magnets[3]). In general the air gap in the electrostatic deflector is smaller than the air gap of the magnet. The magnetic fringing field region is therefore wider than the electric fringing field region. This is illustrated in fig. 1. It is assumed that the device is designed such that the effective lengths of the electric field and the magnetic field are identical. As seen in fig. 1, a particle will experience two opposite impulses in the entrance fringing field region – first deflecting the particle in the direction of the magnetic force, and later straightening out the orbit again. A corresponding opposite orbit offset occurs at the exit as shown. The offset can be expressed by a simple formula similar to the one given in ref. 3

$$\Delta x = I_1 \frac{D_M^2 - D_E^2}{R}, \tag{5}$$

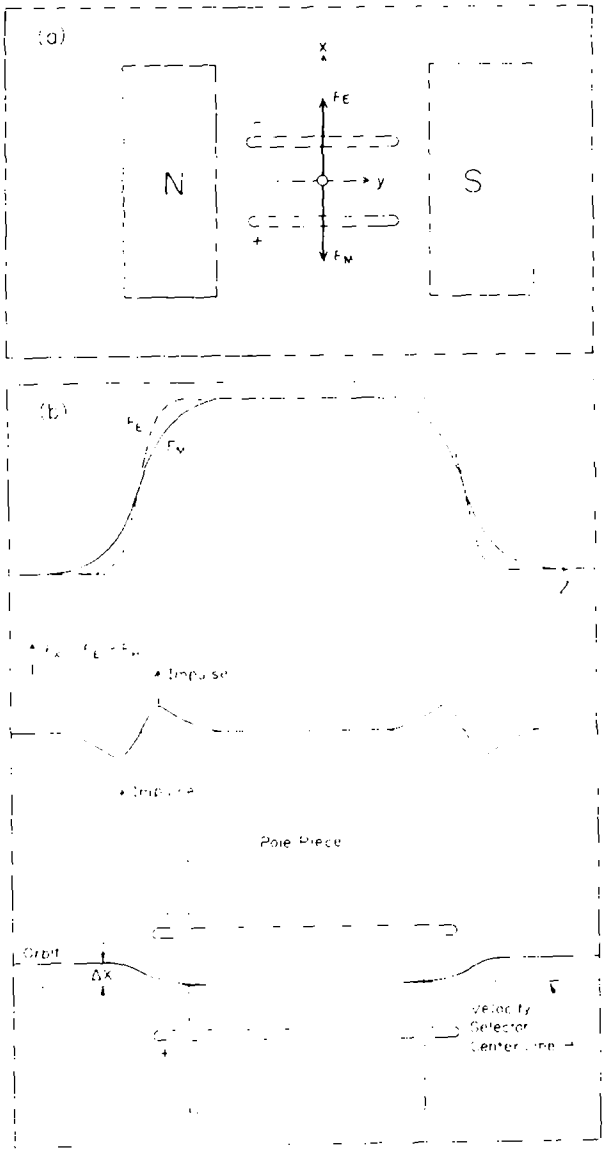

Fig. 1. (a) Schematic cross section of a velocity selector showing the directions of the electric force F_E and the magnetic force F_M. (b) Imperfect cancellation of forces in the fringing field regions produces parallel offset Δx of the central orbit.

where D_M is the magnet air gap, D_E is the electrostatic deflector gap, I_1 is an integral which depends upon the shape of the fringing field curve[3]), and R is defined above. For $I_1 = 0.85$, as a typical example, $D_M = 10$ cm, $D_E = 2.5$ cm, and $R = 270$ cm, we obtain a center line offset of $\Delta x = 0.3$ cm. The example is applicable to the energy–mass spectrograph described in the previous paper[4]). The velocity selector has been offset vertically by 3 mm rel-

ative to the target spot and the median plane of the magnetic spectrograph.

The extended fringing fields (EFF as opposed to SCOFF) of dipole magnets result in a reduction in vertical focusing as described in ref. 3. In the velocity selector there is no first-order vertical focusing anywhere. The extended fringing fields, however, do produce a reduction in focusing and this reduction occurs in the x-direction, in the notation used here. If the fringing fields of the electrostatic deflector and the magnet overlap perfectly ($D_M = D_E$), the reduction in focusing can be represented by a defocusing lens in each fringing field (exit and entrance) of focal strength

$$1/f = -I_2 D_M/R^2, \tag{6}$$

where I_2 is another integral given in ref. 3. Typically its value may be $I_2 = 0.7$. When the gap of the electrostatic deflector is smaller than the air gap of the magnet, the situation is a bit more complicated but the effect is always one of reduction of focusing.

If the velocity selector is short compared to the parameter R, i.e., $L \ll R$, the device can be treated as a thin lens. We then write

$$\frac{1}{f} = -\theta/x = \frac{\sin\alpha}{R} \approx \frac{L}{R^2}. \tag{7}$$

When combined with eq. (6) representing the reduction in both fringing fields, the formula for the focal strength becomes

$$\frac{1}{f} = \frac{1}{R^2}(L - 2I_2 D_M). \tag{8}$$

Also, for the case $L \ll R$ we can rewrite the dispersion terms as

$$x/\delta \approx -R(1-\cos\alpha) \approx -L^2/2R, \tag{9}$$

and

$$\theta/\delta \approx -\sin\alpha \approx -L/R. \tag{10}$$

A particle with velocity $(1+\delta)v_0$ will emerge at the exit with an angle $\theta = -L\delta/R$ and at a position $x = -\frac{1}{2}\theta L$.

3. Technical details

Fig. 2 shows a cross section of the velocity selector for the EMS described in the previous paper. The electrostatic deflector plates are made of stainless steel and are contoured at the edges in order to maximize the available volume of homogeneous or near homogeneous field. The plates are 110 cm long and supported near the ends by standoff porcelain insulators, as shown in the upper part of fig. 2. The plates are connected to their respective power supplies (±60 keV) through porcelain air-to-vacuum feedthrough insulators. The magnet pole pieces are 101.6 cm long and 15.2 cm wide with a gap of 10.2 cm. The two coils have 64 turns each, powered in series from a 250 A, 35 V

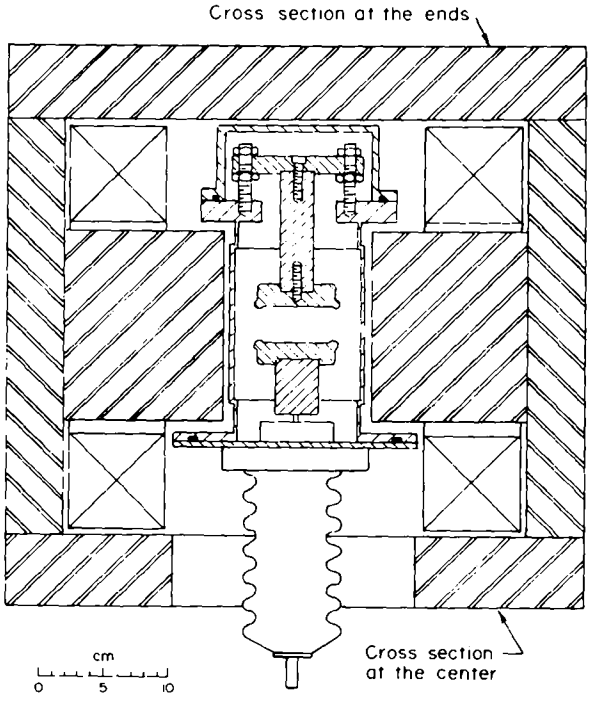

Fig. 2. Cross section of the velocity selector. The upper half shows the support structure near the end of the electrodes. The lower half is a cross section through the center of the device showing the feedthru insulator.

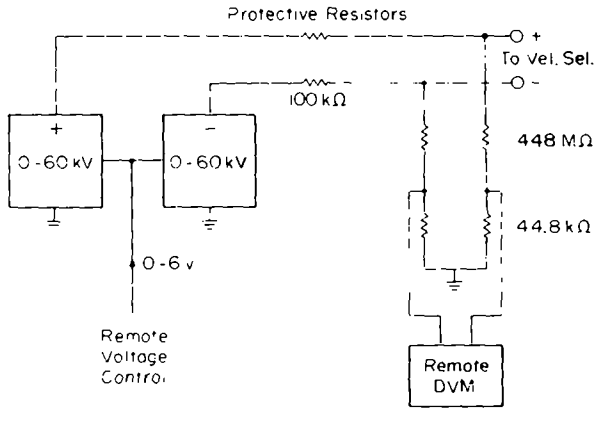

Fig. 3. Schematic diagram of high-voltage supplies and digital-voltmeter monitoring circuit.

stabilized power supply to yield a maximum magnetic field of approximately 4000 G.

Fig. 3 shows very schematically the arrangement of the high voltage power supplies for the electrostatic deflector. The stabilized supplies are models RHR60P30/RVC and RHR60N30/RVC, manufactured by Spellman High Voltage Electronics Corporation. The voltage is remotely adjusted with a 0–6 V dc analog signal. The total voltage between the plates is monitored remotely with a digital voltmeter supplied through two voltage dividers, each with a ratio of 10^4 to 1. The high voltage resistors in the meter circuit are each made up of six 74.6 MΩ resistors. Both the high voltage resistors and the 44.8 kΩ resistors at the lower end of the chains have capacitors in parallel for transient protection (not shown in fig. 3).

The energy-mass spectrograph is mainly designed for detecting evaporation residues from fusion reactions. These evaporation residues are emitted in the forward direction within a cone of half angle of perhaps a few degrees. It is therefore highly desirable to have the possibility of zero degree operation. This poses a serious problem, namely that of getting rid of the beam without swamping the detector with background radiation. In a fusion reaction the velocity of the particles in the beam is typically a factor 2–4 times larger than the velocity of the evaporation residues. This normally means that the beam will strike the positive deflector plates of the velocity selector. Here the particles can undergo small angle scattering, come out with a reduced velocity closer to v_0 and therefore make it through to the detector. To cut down on this background the positive plate of the velocity selector has been supplied with four beryllium-covered baffles, as shown in fig. 4. The baffles have decreasing thickness as a function of distance through the velocity selector so as to produce no reduction in solid angle for particles with velocity $v = v_0$.

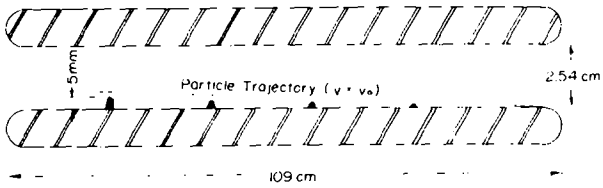

Fig. 4. Positioning of beryllium-covered baffles (black) for beam trapping. (Note differences in vertical and horizontal scales.)

The relatively small solid angle of the device (0.64 msr) is a result of the requirement of good velocity resolution, that is, a long device with relatively small plate separation to produce a high electric field. It would be advantageous for future instruments to find a design that can operate at higher field strengths and that therefore can be shortened and/or made with a larger plate separation. In high energy physics, velocity selectors have been used with total plate voltages of 600 kV and more over typically 10 cm separation. This has been achieved partly by using a conductive (heated) glass cathode and also by operating the device at a gas pressure of approximately 10^{-4} mm Hg. Unfortunately, a heavy-ion spectrograph has to operate at high vacuum to avoid charge exchange in the rest gas. However, by using glass instead of stainless steel in the cathode one may be able to achieve a significant improvement in breakdown voltage.

We are indebted to N. Tsoupas for performing the detailed calculations of the fringing field effects including the center line offset discussed in section 2.

References

[1]) K. T. Bainbridge, Phys. Rev. **40** (1935) 130A.
[2]) S. Penner, Rev. Sci. instr. **32** (1961) 150.
[3]) H. A. Enge, Rev. Sci. Instr. **35** (1964) 278.
[4]) H. A. Enge and D. Horn, preceding paper.