# Basic Gain-Switched Diode Laser Set-Up

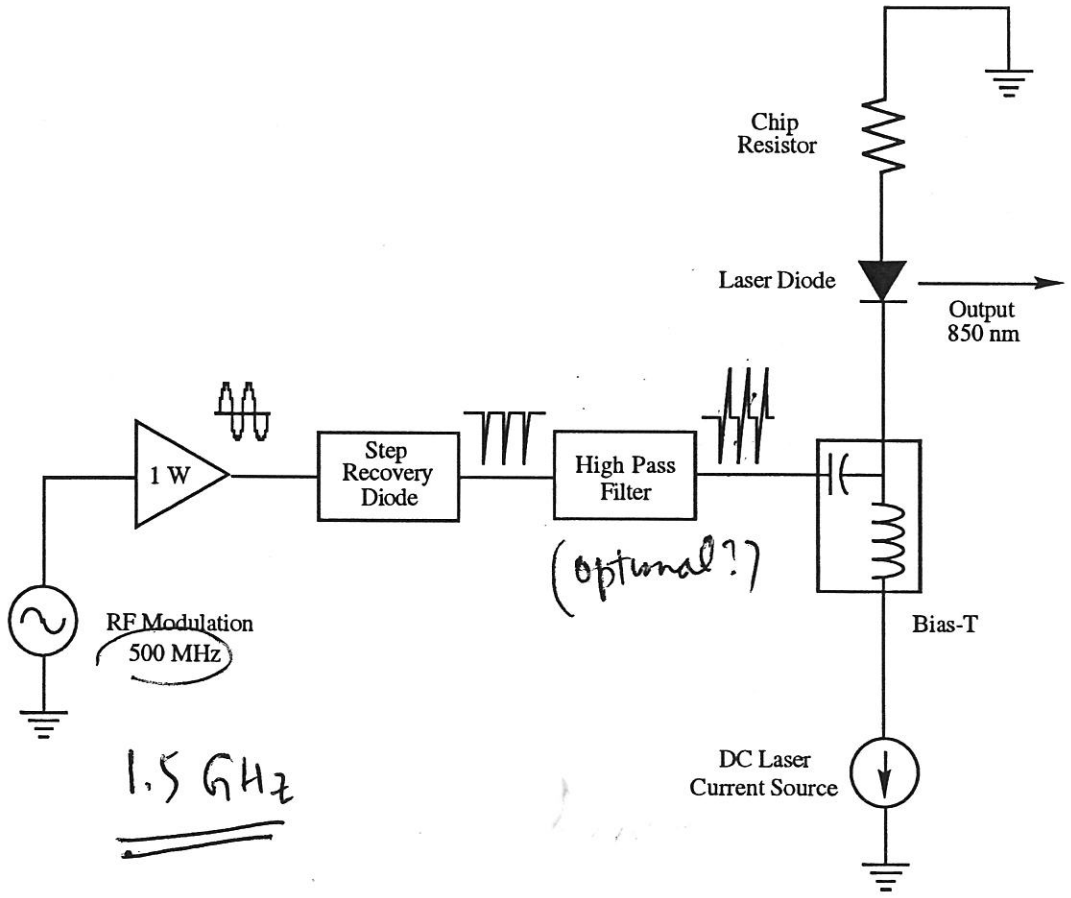

# Gain-Switched Diode Laser Master Oscillator and Semiconductor Optical Amplifier

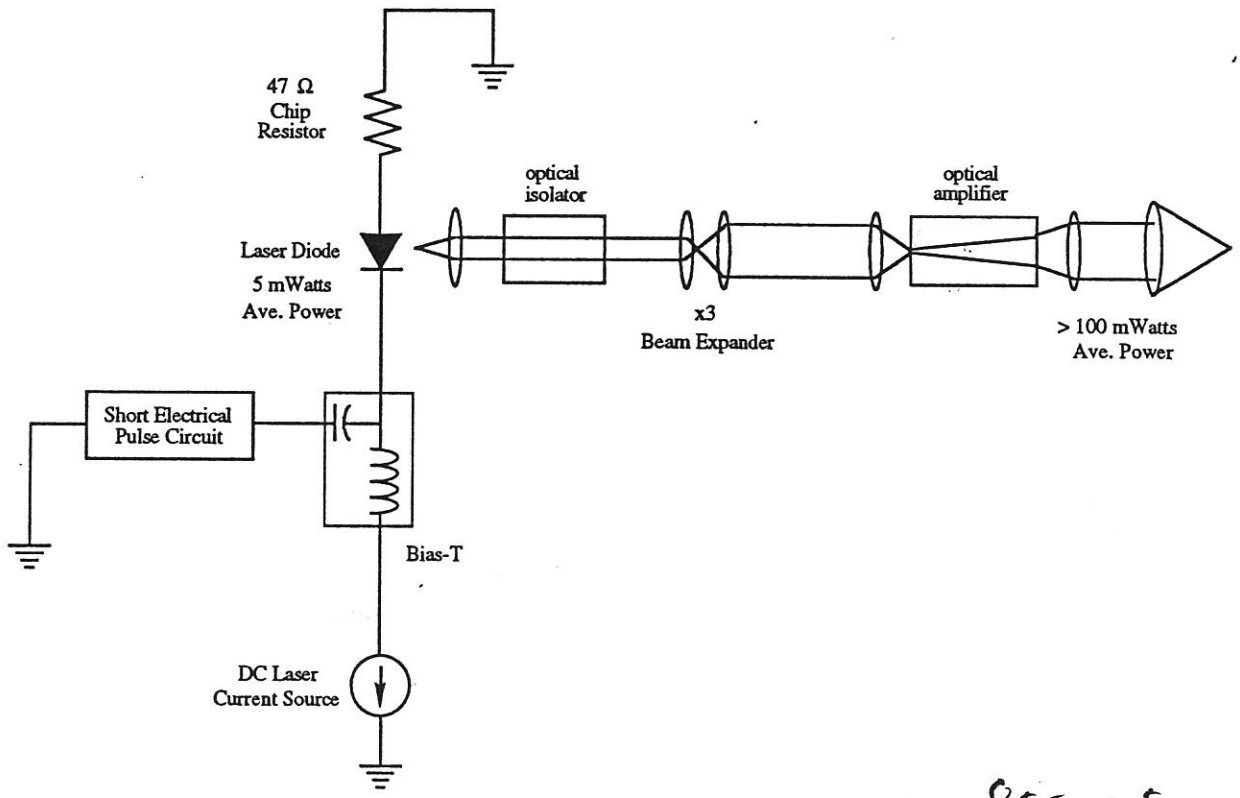


855 ± 5 nm

# Basic Gain-Switched Diode Laser Test Setup

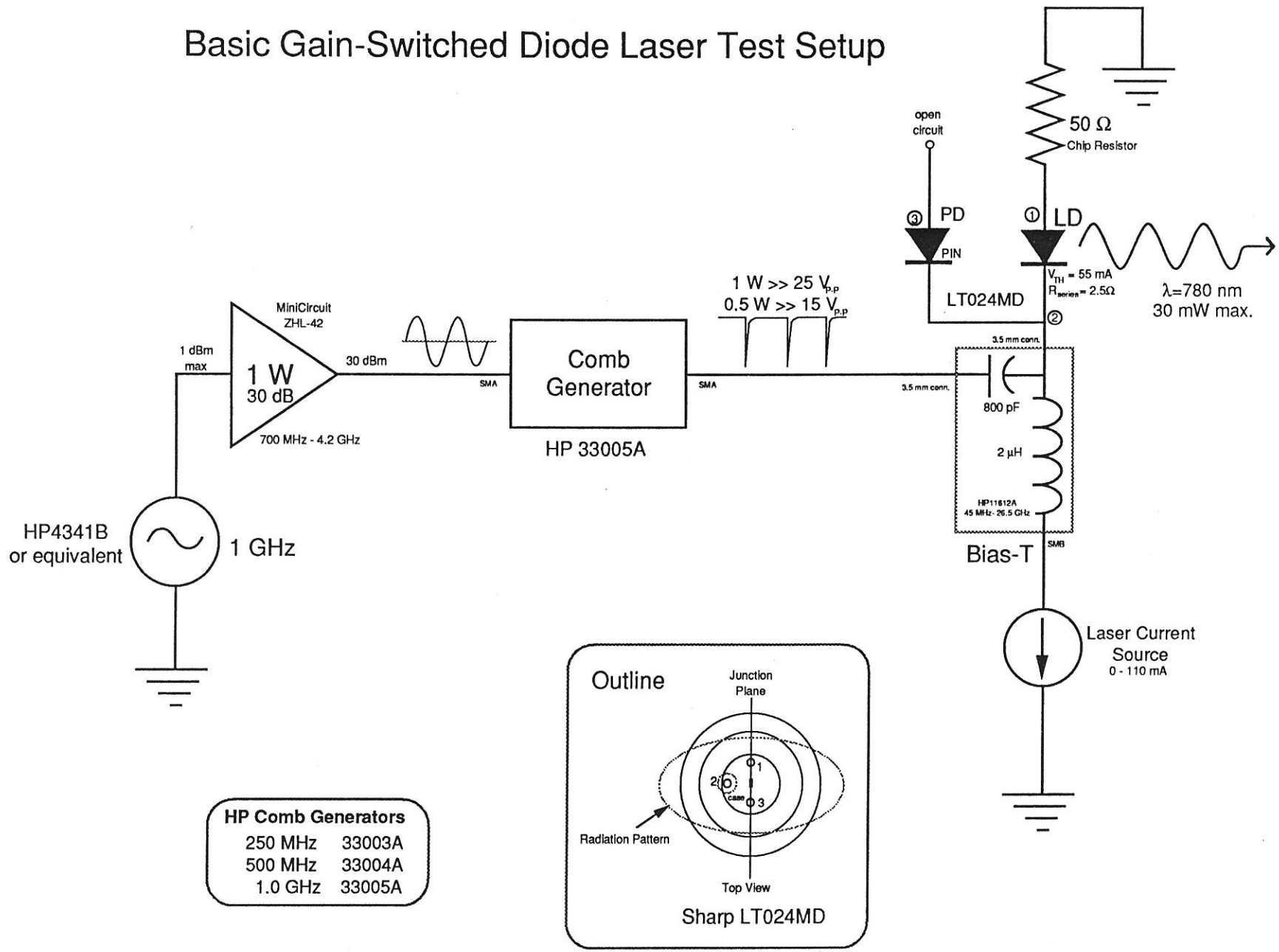


Fig. 1

# Comb Generator Electrical Pulse Test Setup

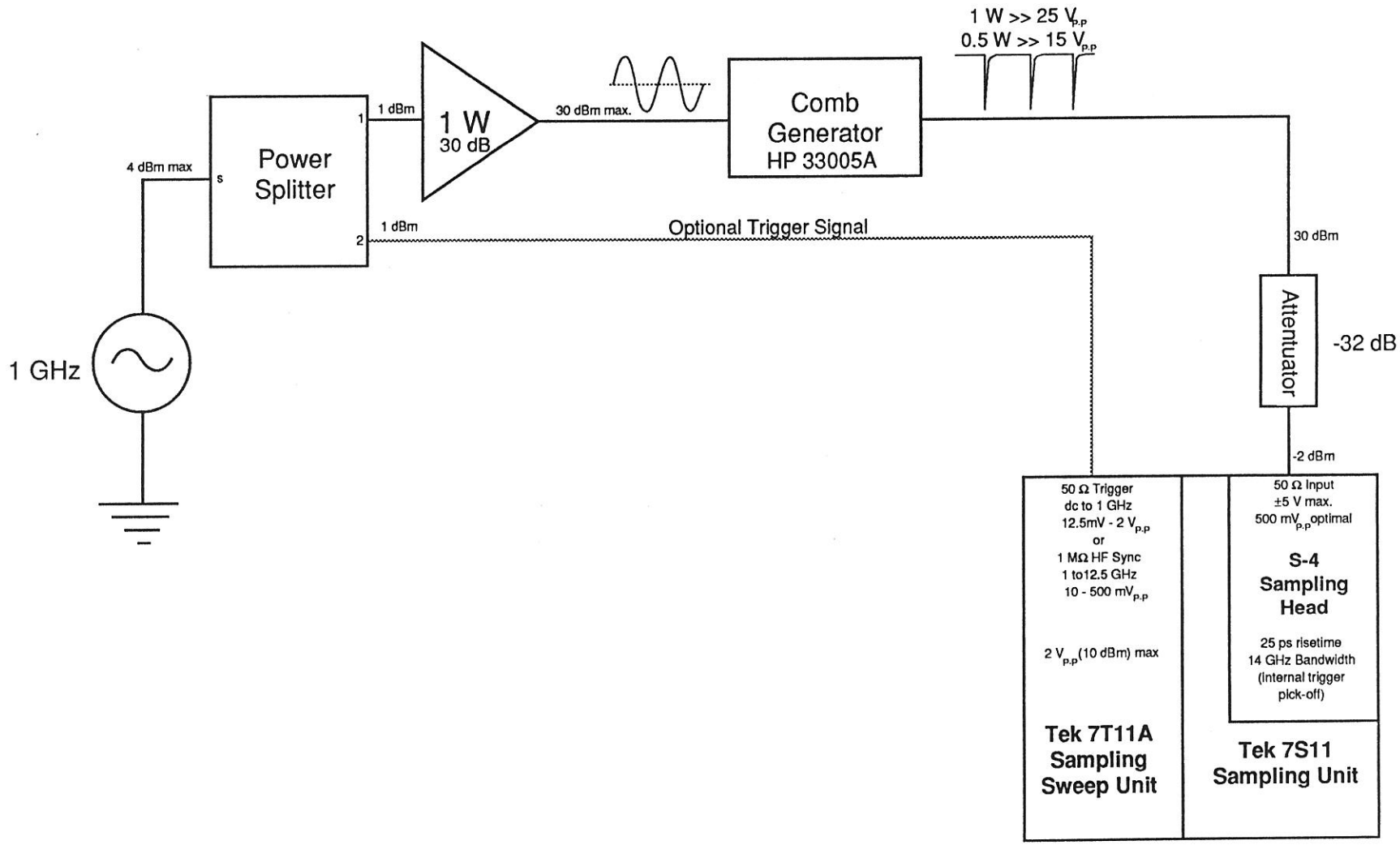


Fig. 2

A. Ketterson 3/90

# Test Use of RC-Differentiator to Produce Bipolar Drive Pulses

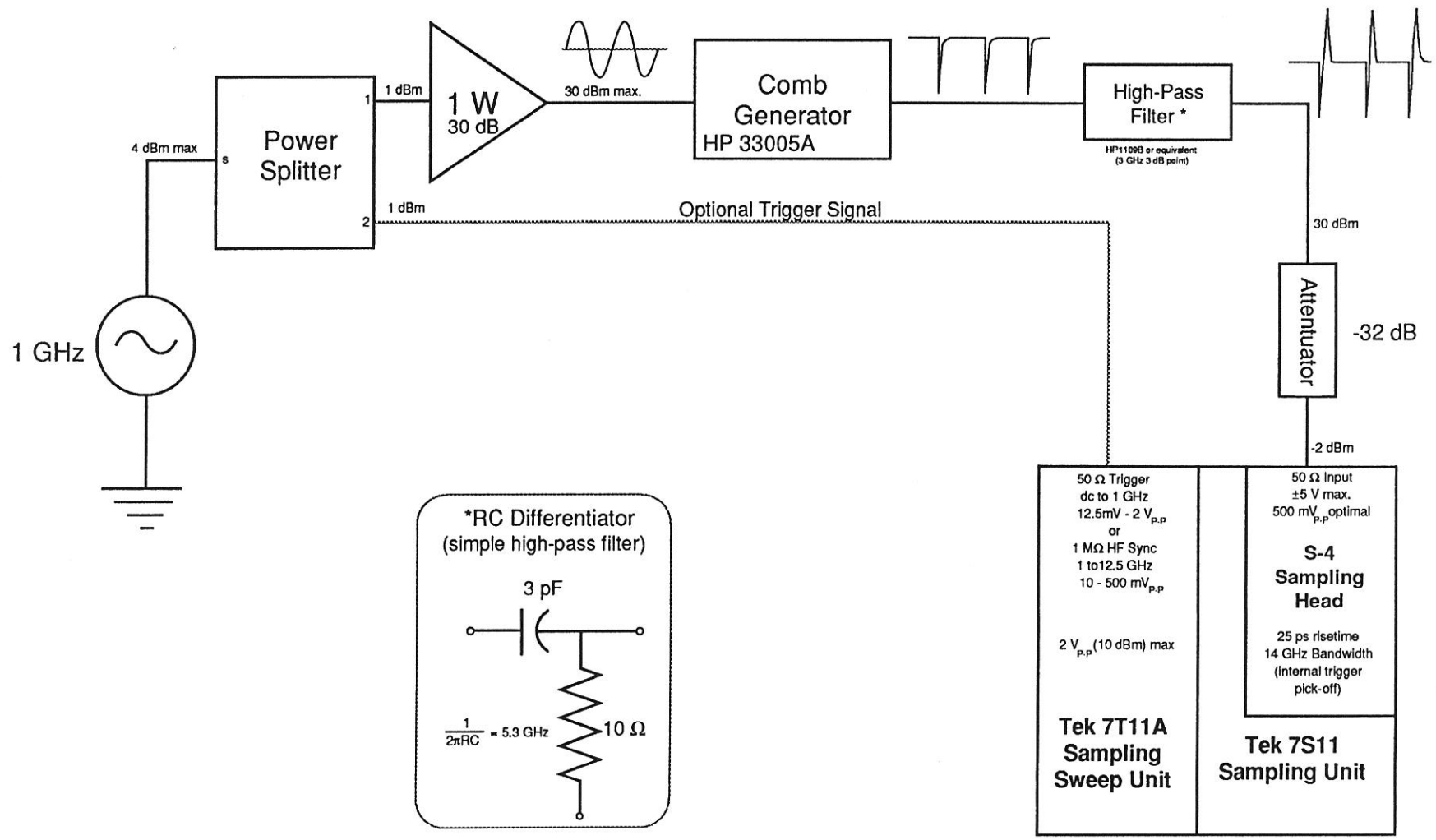


Fig. 4

A. Ketterson 3/90

# Pseudorandom Optical Pulse Generator

( after Lau & Yariv, *Optical Comm.*, p337, Dec. 1980)

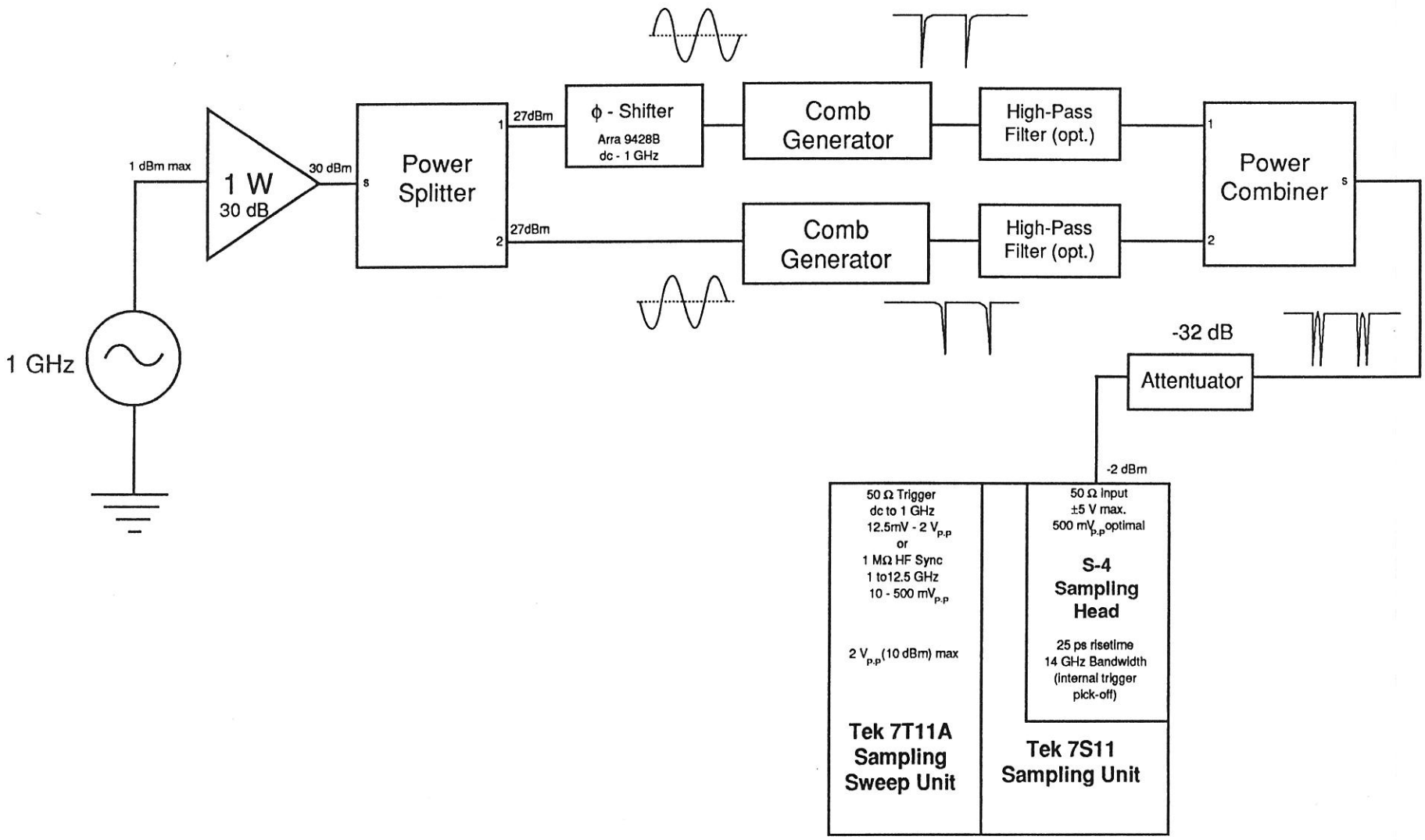


Fig. 5

A. Ketterson 3/90

# Calibration of Monitor Photodiode
(w/o Optical Fiber)

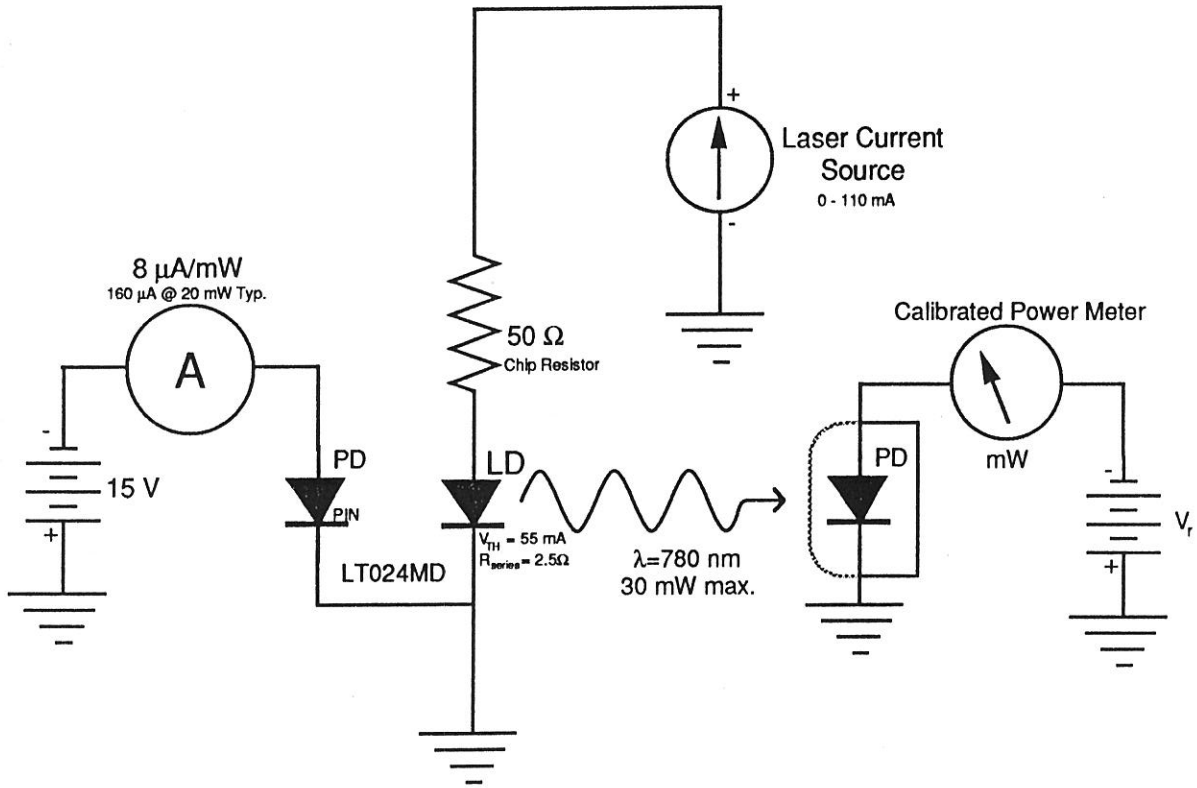


Fig. 6

A. Ketterson 3/90

# Calibration of Monitor Photodiode
(with Optical Fiber)

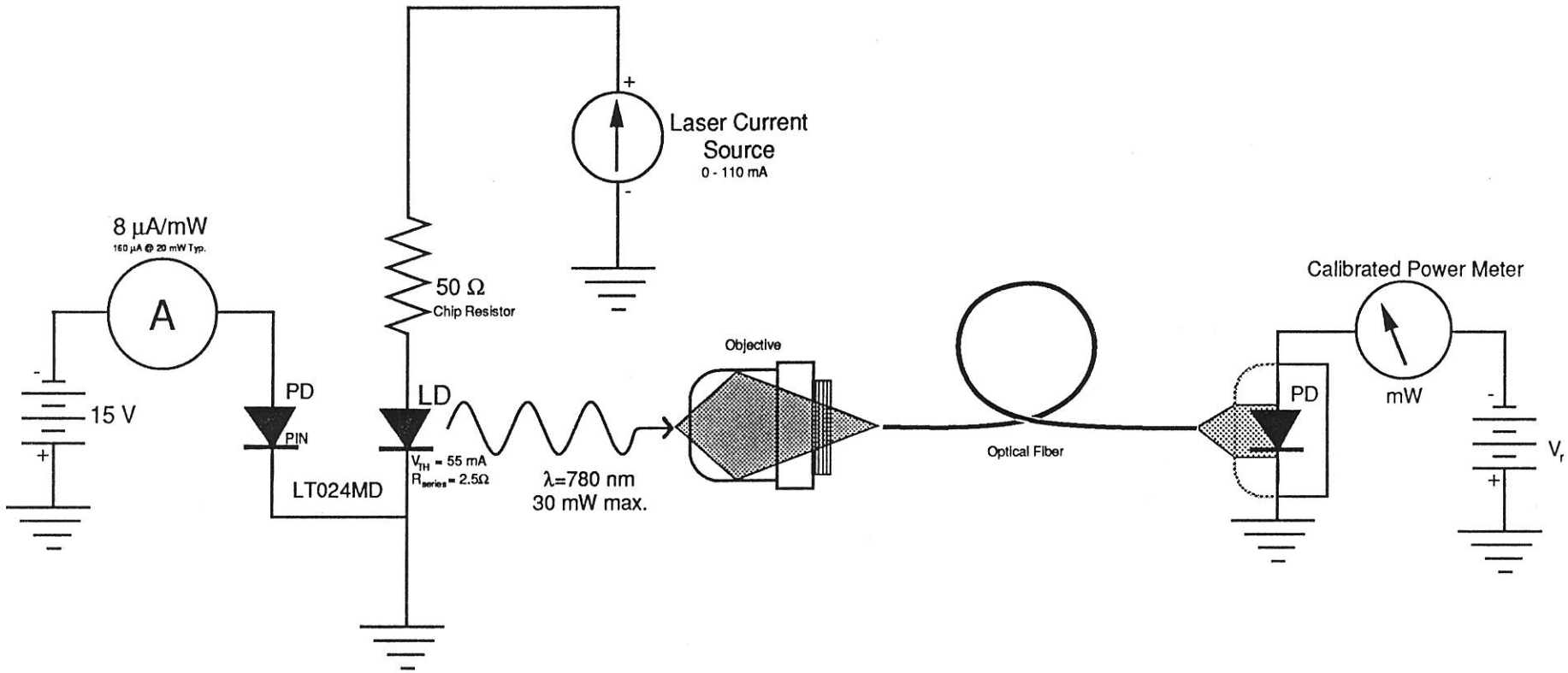


Fig. 7

A. Ketterson 3/90

# Short Optical Pulse Test Setup

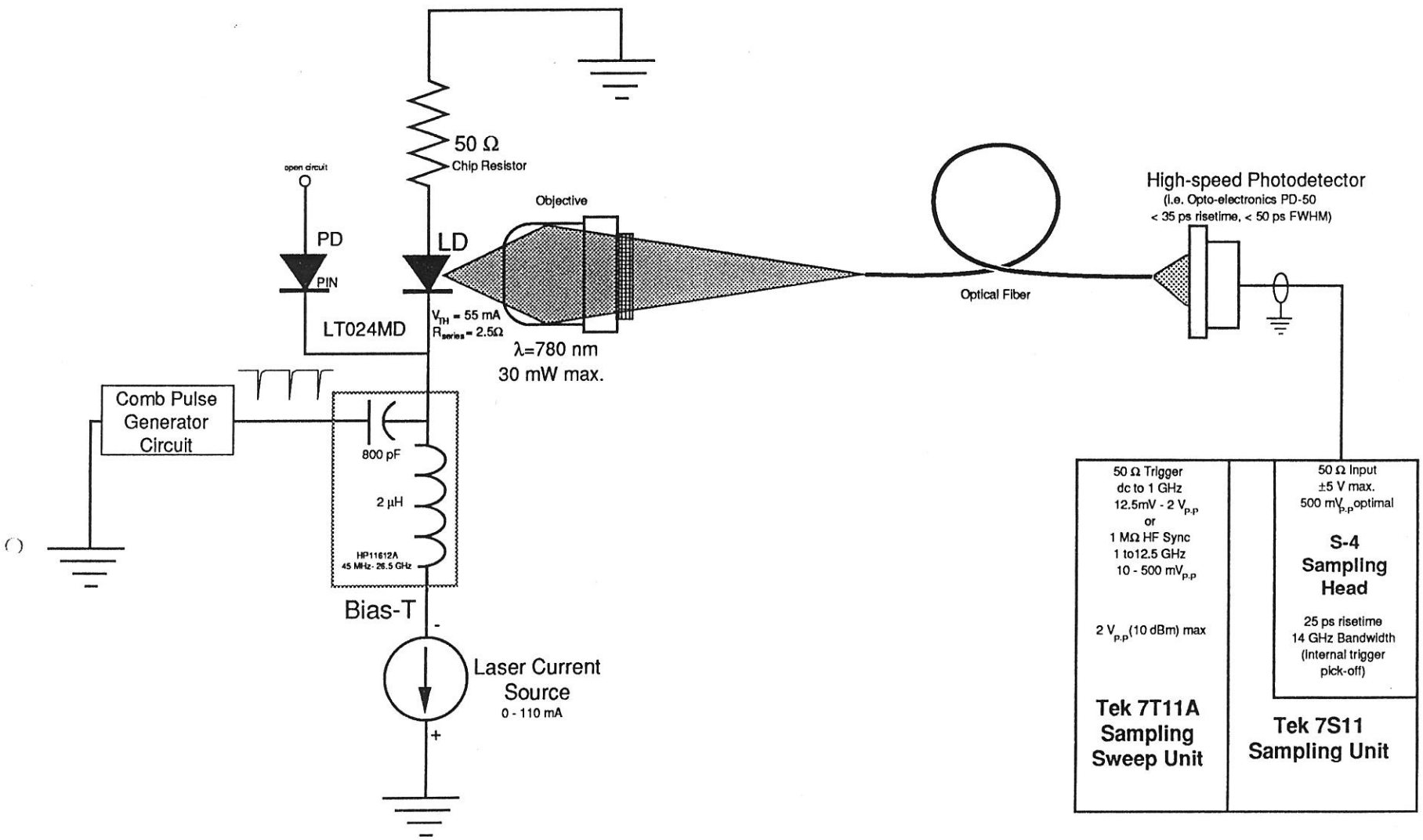


Fig. 8

A. Ketterson 3/90

# On-wafer High-Speed Optical Test Setup

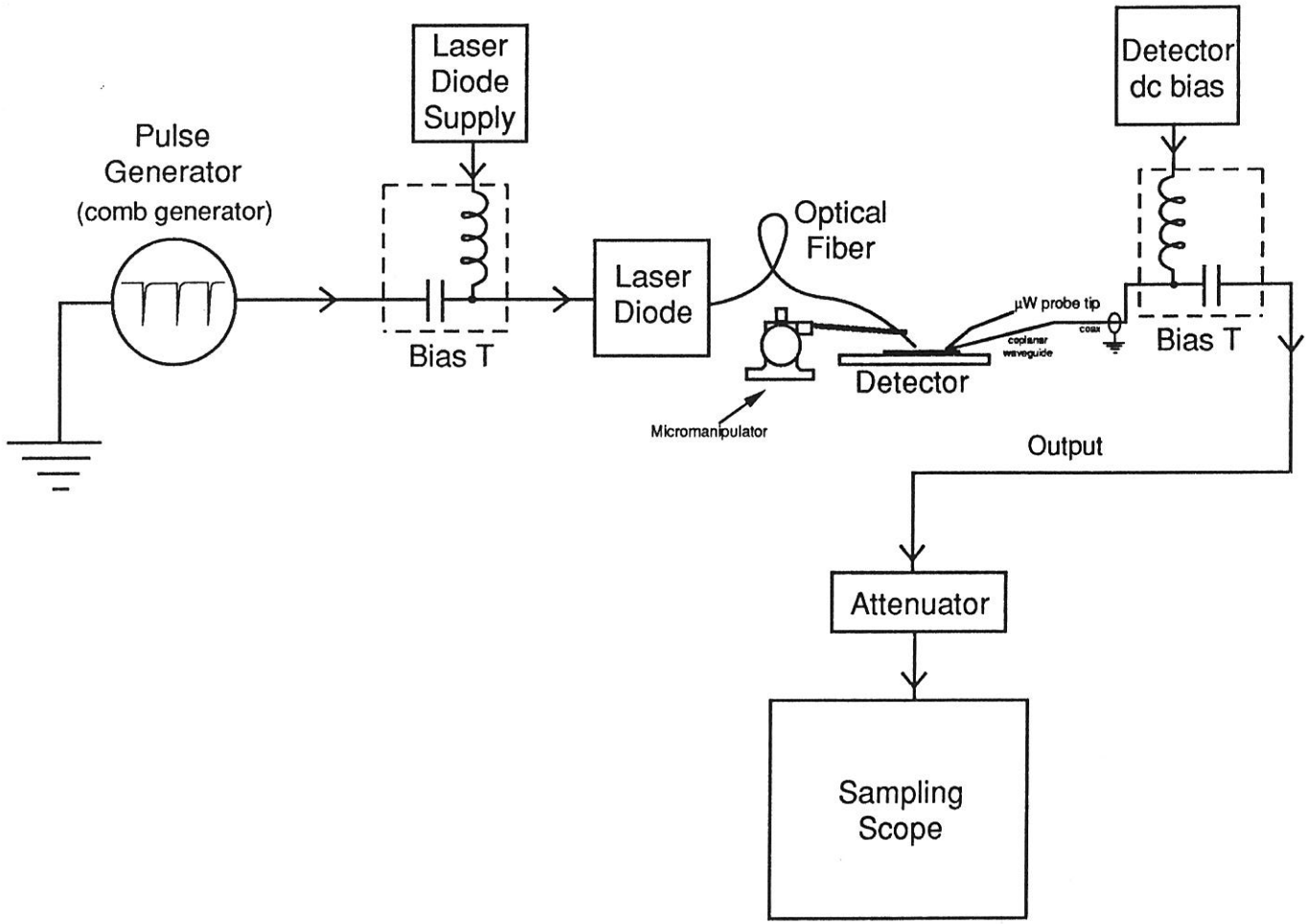


Fig. 9

A. Ketterson 3/90

# Pseudorandom Optical Pulse Generator

( after Lau & Yariv, *Optical Comm.*, p337, Dec. 1980)

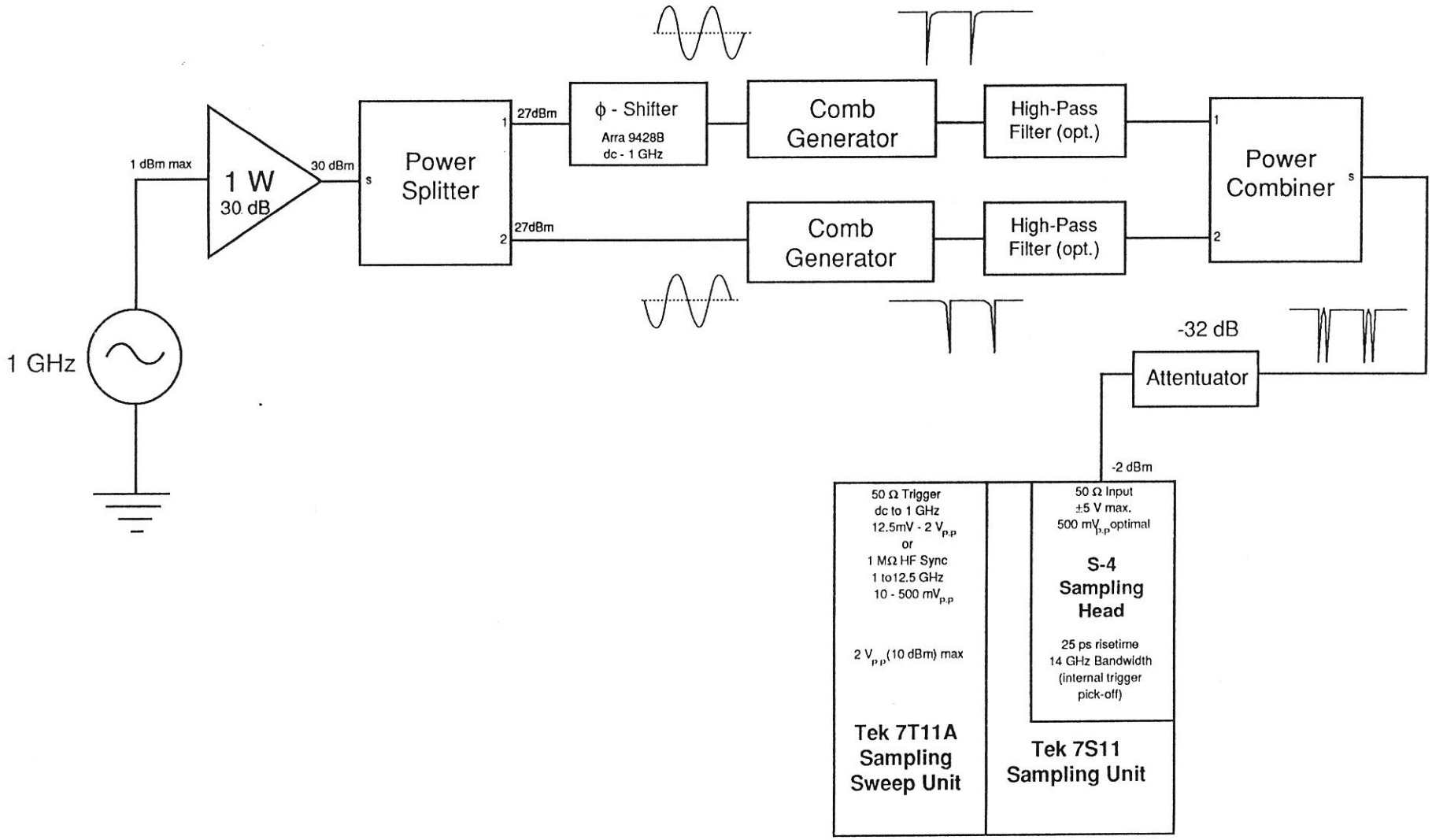


A. Ketterson 4/90

# Calibration of Monitor Photodiode
(with Optical Fiber)

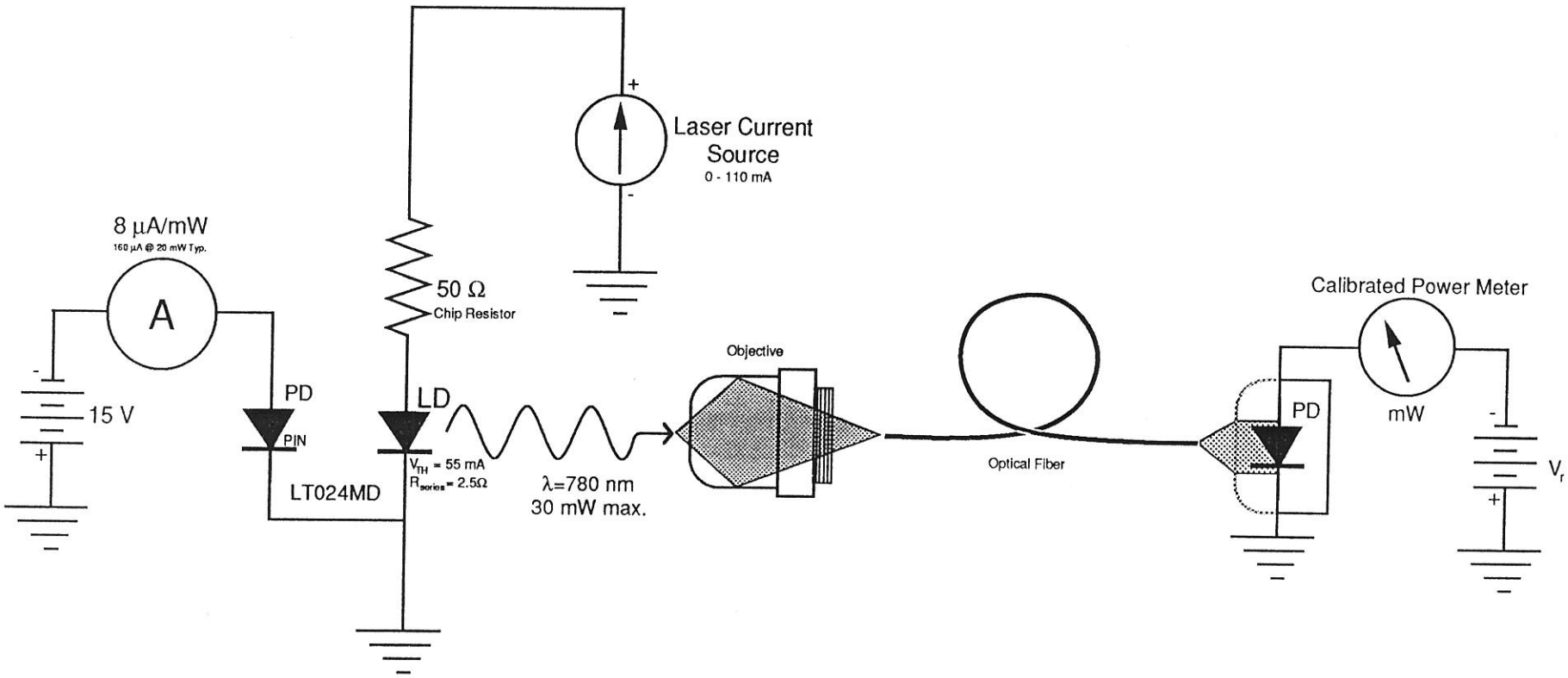


A. Ketterson 4/90

# Calibration of Monitor Photodiode
(w/o Optical Fiber)

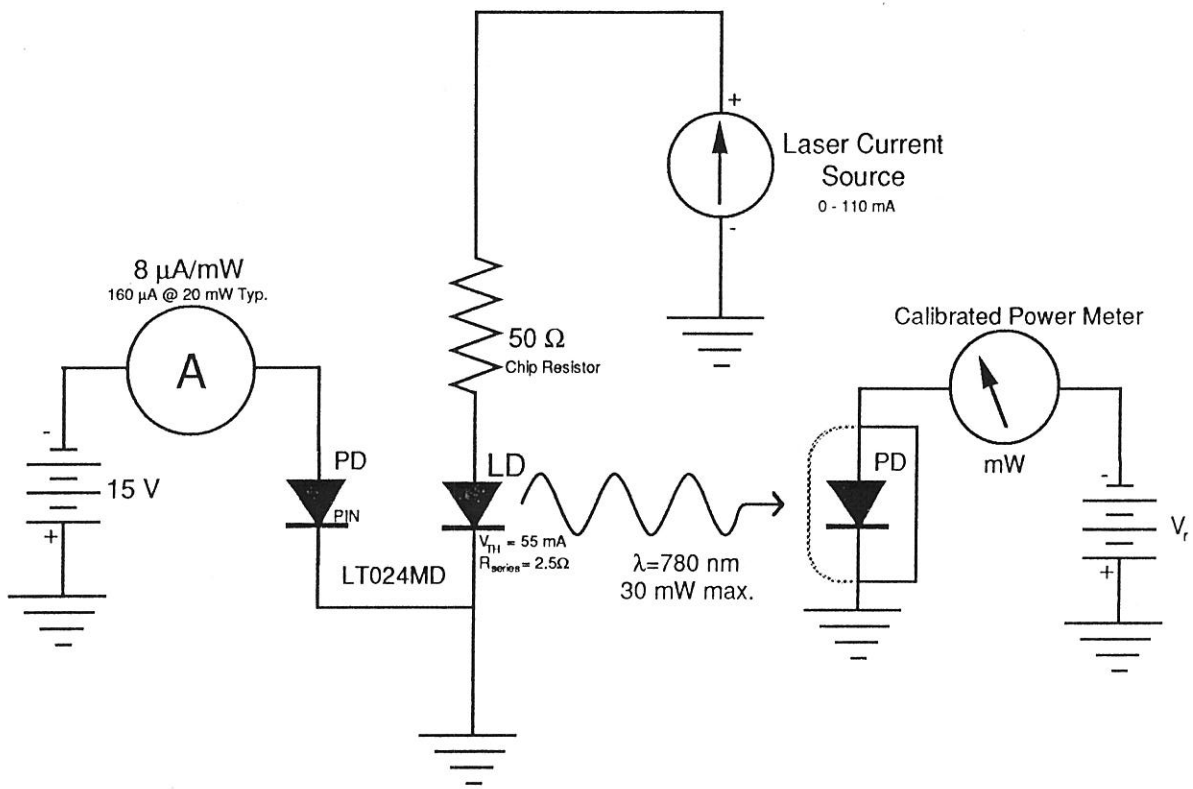


A. Ketterson 4/90

Herotek

## FACSIMILE TRANSMISSION

**TO:** CEBAF

**ATTENTION:** MIKE POELKER
**MAIL STOP 12H**
**FAX:** 804-249-5800

**CC:** AECI(TOP SHEET ONLY)
**REFERENCE:** OUR 3/17 TELECON

**SUBJECT:** COMB GENERATORS

**DATE:** March 17, 1995

**PAGE:** 1 OF 1

**FROM:** JOHN TATUM

---

FOLLOWING ARE COPIES OF OUR COMB GENERATOR DATA SHEETS FOR YOUR REVIEW.

MY BEST REGARDS,
JOHN TATUM
SALES AND MARKETING MANAGER

**ARE YOU COMING TO THE MTT SHOW IN ORLANDO MAY 16-18?**
**IF SO, PLEASE VISIT US AT BOOTH NO. 1313**

**HEROTEK, INC. • 222 N. WOLFE RD. • SUNNYVALE, CA 94086 • TEL (408) 730-1702 • FAX (408) 730-4015**

# COMB (HARMONIC) GENERATORS

## WITH INTEGRAL PREAMPLIFIER — 0.1-18 GHz

FEATURES:

- o OPTIONS FOR INPUT DRIVE OF 0 dBm OR +10 dBm
- o BROADBAND OUTPUT SPECTRUM
- o HERMETICALLY SEALED PACKAGE
- o FIELD REMOVABLE CONNECTORS FOR DROP-IN ASSEMBLY

ENVIRONMENTAL RATING:

MAX INPUT POWER . . . . . 100 mWATT
OPERATING TEMP . . . . . -55°C TO +95°C
STORAGE TEMP. . . . . -65°C TO +125°C
TEMP CYCLING . . . . . -65°C TO +125°C
SHOCK . . . . . 50G, 11 mSEC
VIBRATION . . . . . 20G, 100 TO 200 Hz

SPECIFICATIONS: (@ +25°C)

| MODEL | INPUT POWER (dBm) | INPUT FREQUENCY (MHz) | MAXIMUM INPUT VSWR | MINIMUM OUTPUT POWER PER PICKET (dBm) | | | | | OUTLINE |
|---|---|---|---|---|---|---|---|---|---|
| | | | | UP TO 4 GHz | 4-8 GHz | 8-12.4 GHz | 12.4 - 18 GHz | 18-26 GHz | |
| GCA100A | 0 | 100 | 2:1 | -12 | -20 | -30 | -40 | — | 3A |
| GCA100B | +10 | | | | | | | | |
| GCA200A | 0 | 200 | 2:1 | -7 | -15 | -25 | -35 | — | 3A |
| GCA200B | +10 | | | | | | | | |
| GCA250A | 0 | 250 | 2:1 | -2 | -10 | -20 | -30 | — | 3A |
| GCA250B | +10 | | | | | | | | |
| GCA500A | 0 | 500 | 2:1 | +3 | -5 | -15 | -20 | — | 3A |
| GCA500B | +10 | | | | | | | | 1A |
| GCA1000A | 0 | 1000 | 2:1 | +3 | 0 | -10 | -15 | — | 3A |
| GCA1000B | +10 | | | | | | | | 1A |
| GCA0526A | 0 | 500 | 2:1 | +3 | -5 | -15 | -20 | -40 | 3A |
| GCA0526B | +10 | | | | | | | | 1A |
| GCA1026A | 0 | 1000 | 2:1 | +3 | 0 | -10 | -15 | -35 | 3A |
| GCA1026B | +10 | | | | | | | | 1A |
| GCA1526A | 0 | 1500 | 2:1 | +3 | 0 | -5 | -10 | -25 | 3A |
| GCA1526B | +10 | | | | | | | | 1A |
| GCA2026A | 0 | 2000 | 2:1 | +3 | 0 | 0 | -10 | -20 | 3A |
| GCA2026B | +10 | | | | | | | | 1A |

NOTES:

(ALL UNITS DO NOT HAVE INTERNAL REGULATOR AND WILL BE PERMANENTLY DAMAGED IF MORE THAN +5.2 V OF BIAS IS USED.)

1. BIAS VOLTAGE: +5±0.2V
   CURRENT: 150 mA NOMINAL FOR "B" MODEL, 200 mA NOMINAL FOR "A" MODEL
2. OTHER INPUT FREQUENCIES FROM 30 MHz TO 2 GHz ARE AVAILABLE. CONTACT FACTORY FOR INFORMATION.

SEE BACK OF SHEET FOR OUTLINES.

Herotek
HEROTEK, INC. • 222 N. Wolfe Road • Sunnyvale, CA 94086
Telephone (408) 730-1702 • Telex 508407 • Fax (408) 730-4015



Mar-17-95 15:58 Herotek, Inc 408 7304015 P.04

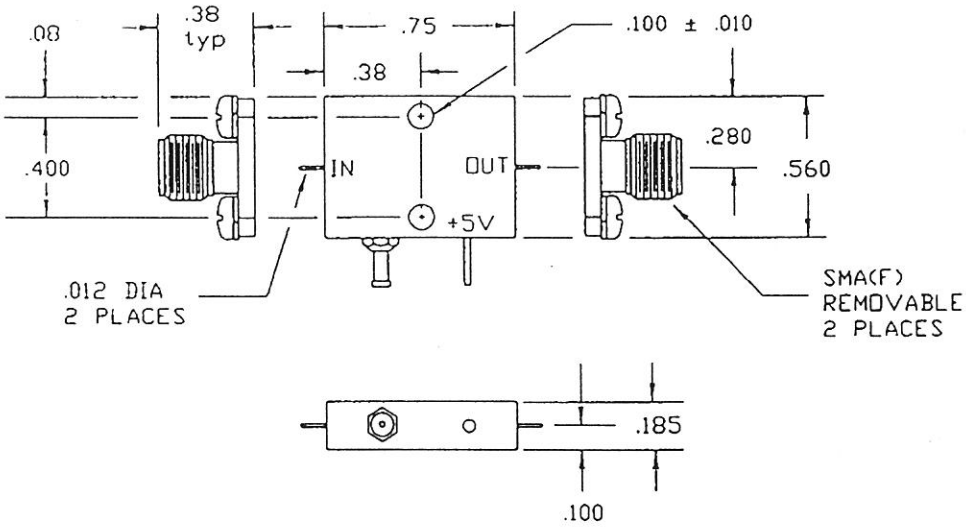


OUTLINE 1A (INCHES)

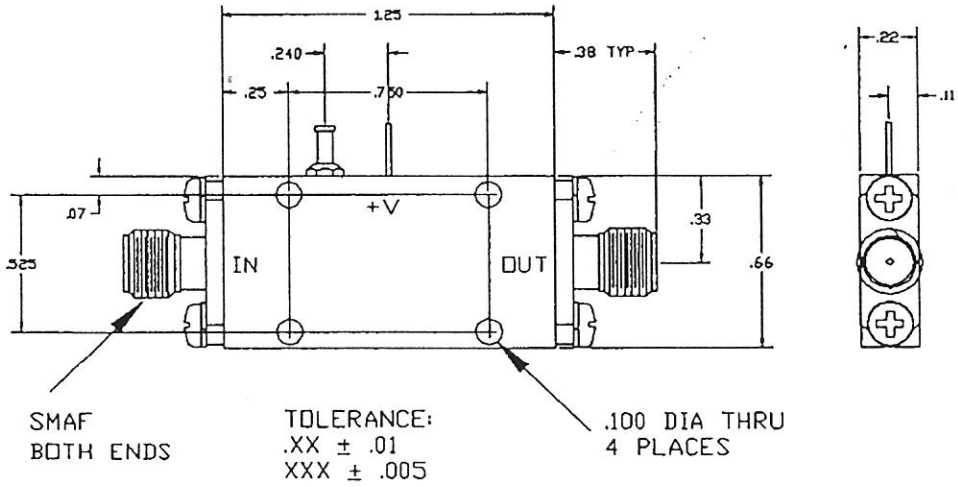


OUTLINE 3A (INCHES)

# STEP RECOVERY DIODE COMB (HARMONIC) GENERATORS, 0.1 to 26 GHz

## TYPICAL OUTPUT POWER SPECTRUM ENVELOPE

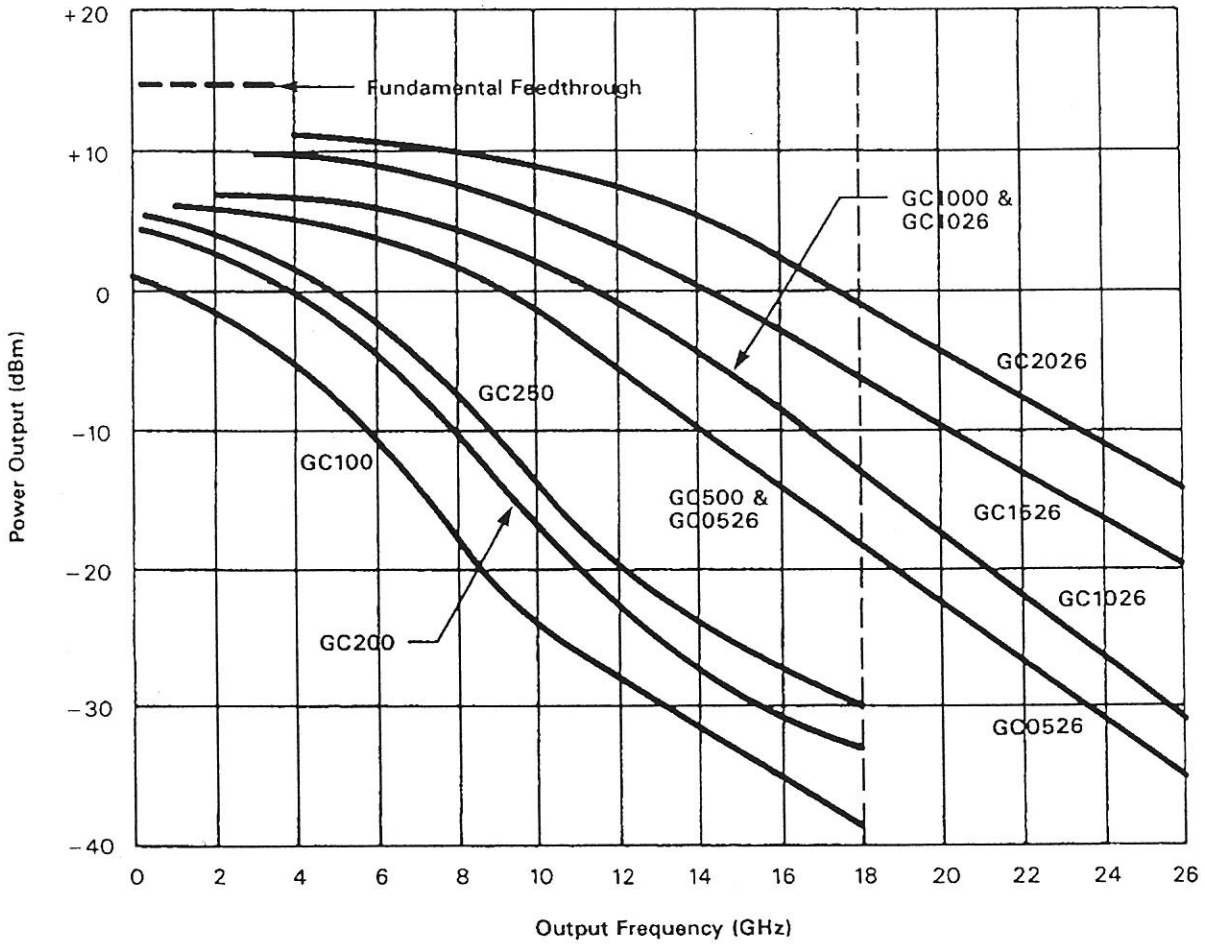


## SCHEMATIC

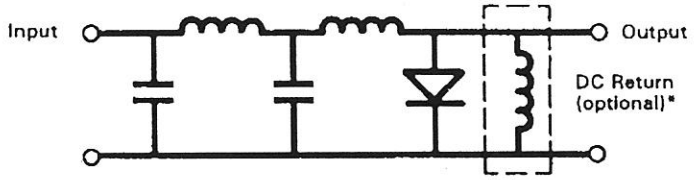


*DC return is required for proper operation. It can be provided internally or externally.

## PACKAGE STYLES

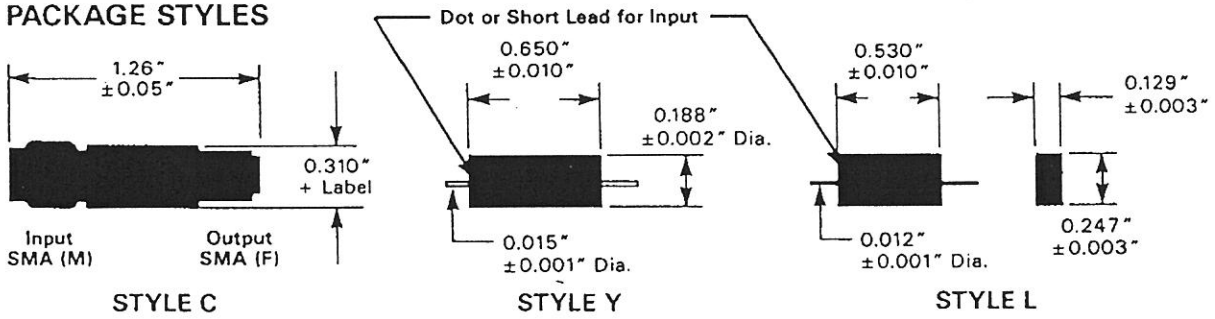



Herotek

HEROTEK, INC. • 222 N. Wolfe Road • Sunnyvale, CA 94086
Telephone (408) 730-1702 • Telex 508407 • Fax (408) 730-4015

HEWLETT PACKARD

# COAXIAL STEP RECOVERY DIODE MODULES (IMPULSE TRAIN GENERATORS)

33002 A/B
33003 A/B
33004 A/B
33005 C/D

## Features

**VARIOUS DRIVE FREQUENCIES AVAILABLE**
**100, 250, 500, 1000 MHz**

**NARROW OUTPUT PULSES**
**130 Picosecond Pulse Width With 10 Volt Amplitude**

**BROADBAND OUTPUT COMB**
**Useful Power at Each Harmonic through 18 GHz**

**INPUT MATCHED TO 50Ω**

**SELF-BIASED**
**No External Bias Required**

**RELIABLE**
**Rugged, Reliable Solid State Hybrid Integrated Design**

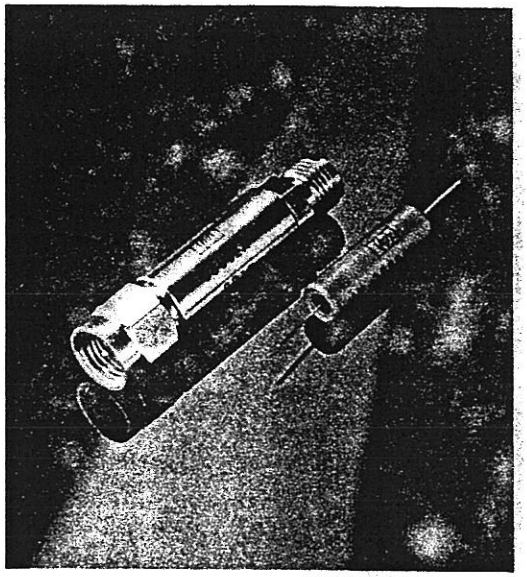

## Description

These units are integrated step recovery diode "impulse train" generating circuits matched to 50Ω at the input frequency. All circuit elements necessary to produce the impulse train are integrated into the hermetically sealed cylindrical module. All internal joints are welded or thermo-compression bonded for high reliability. Modules are also availabe mounted in a 3 mm connector housing containing a DC return which self-biases the diode.

## Applications

When driven at the appropriate input frequency, the output of these devices is a train of narrow, high amplitude pulses at a repetition rate equal to the input frequency. The resulting "comb" spectrum consists of lines at all multiples of $f_{IN}$ up to and beyond 18 GHz. The outputs are useful in many applications such as: measurement of the spectral behavior of various linear components (filters and slow wave structures); frequency and amplitude calibration of receivers, systems, and antennas; frequency marking systems; reference frequency generation for phase locked systems; sampling phase-lock systems; local oscillator drivers for coherent receiving techniques; multipliers; and pulse circuit applications.

In addition to drive frequencies of 100 MHz, 250 MHz, 500 MHz and 1000 MHz, other drive frequencies (any frequency between 50 MHz and 3000 MHz) are available on special order.

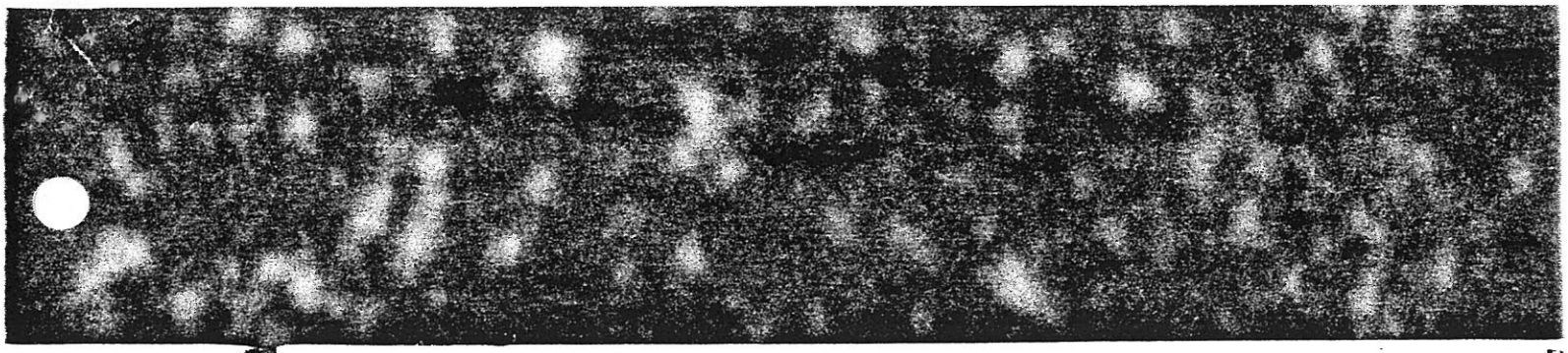

TEP
LES
ORS)

33002 A/B
33003 A/B
33004 A/B
33005 C/D

urement of the spectral
nents (filters and slow
amplitude calibration of
s; frequency marking
eration for phase locked
ystems; local oscillator
niques; multipliers; and

of 100 MHz, 250 MHz,
rive frequencies (any
3000 MHz) are avail-

# Specifications at $T_{CASE}$ = 25°C

## MAXIMUM RATINGS

Maximum power at input frequency(1) . . . . . 1.0 watts
Maximum operating temperature . . . . . 125°C

Notes: (1) Derate to 0.5W at 125°C.

## INPUT SPECIFICATIONS

| Model Number | Input Frequency |
|---|---|
| 33002A/B | 100 ± 5 MHz (useful at slightly reduced performance 100 ± 10 MHz) |
| 33003A/B | 250 ± 12.5 MHz (useful at slightly reduced performance 250 ± 25 MHz) |
| 33004A/B | 500 ± 25 MHz (useful at slightly reduced performance 500 ± 50 MHz) |
| 33005C/D | 1000 ± 50 MHz (useful at slightly reduced performance 1000 ± 100 MHz) |
| Input SWR For All Models | Less than 2:1 at center frequency |

## TYPICAL OUTPUT PULSE CHARACTERISTICS, 0.5 WATT DRIVE

| Model Number (Drive Frequency) | Pulse Height (V) Typ. | Pulse Width (ps) Typ. |
|---|---|---|
| 33002A/B (100 MHz) | 15 | 130 |
| 33003A/B (250 MHz) | 15 | 130 |
| 33004A/B (500 MHz) | 15 | 130 |
| 33005C/D (1000 MHz) | 10 | 130 |

## LINE SPECTRA, 0.5 WATT DRIVE

| Model Number | Power Output per Line (dBm) | | | | | | | |
|---|---|---|---|---|---|---|---|---|
| | $f_0$ to 4 GHz | | 4-8 GHz | | 8-12.4 GHz | | 12.4-18 GHz | |
| | Min. | Typ.† | Min. | Typ.† | Min. | Typ.† | Min. | Typ.† |
| 33002A/B (100 MHz) | -15 | -4 | -25 | -15 | -30 | -25 | | -35 |
| 33003A/B (250 MHz) | -5 | 0 | -15 | -5 | -20 | -15 | | -30 |
| 33004A/B (500 MHz) | -5 | +10 | -5 | 5 | -15 | -5 | | -15 |
| 33005C/D (1000 MHz) | -5 | +10 | 0 | 15 | -10 | 0 | -15 | -5 |

*Fundamental line excluded. †Midband, see figures 7-10.

## MECHANICAL CHARACTERISTICS

Size . . . . . See outline drawing
Weight . . . . . 10 grams
Materials . . . . . Outer case, Kovar; connectors, stainless steel
Finish B and D versions . . . . . Gold plated, 50 microinch minimum
A and C versions . . . . . Stainless steel

## TEMPERATURE EFFECTS

The comb generator is designed to operate over wide ambient temperatures (−55°C to +125°C). The SWR remains below 2:1 and typical spectral line power variation is about ±2 dB over this temperature range.

## BIAS

The circuit diagrams are shown in Figure 1. The "A" and "C" versions are complete comb generators with DC return and require no external bias. The module ("B" and "D" versions, no connectors) can be biased from either end by using a bias tee.

Figure 1a. Electrical Schematic of "A" and "C" Versions

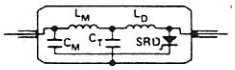

Figure 1b. Electrical Schematic of "B" and "D" Versions

## ENVIRONMENTAL CHARACTERISTICS

Temperature Storage . . . . . −55°C to +125°C
Temperature Operating . . . . . −55°C to +125°C
Temperature Cycling . . . . . MIL-STD-750, Method 1051 Test Condition A
Temperature Shock . . . . . MIL-STD-750, Method 1056 Test Condition A ("B" and "D" versions only)
Moisture Resistance . . . . . MIL-STD-750, Method 1021
Shock (nonoperating) . . . . . MIL-STD-750, Method 2016 5 blows each $X_1$, $Y_1$, $Y_2$ orientations 0.5ms, 1500 g's
Vibration Fatigue . . . . . MIL-STD-750, Method 2046

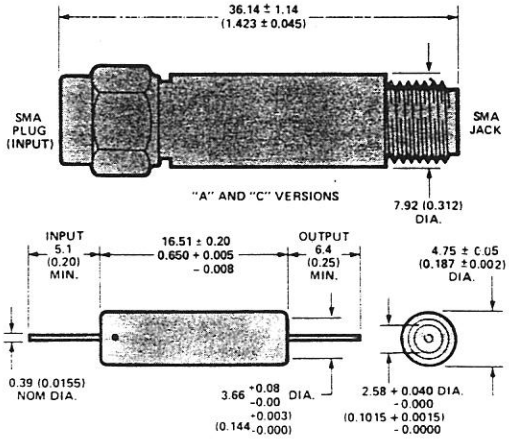


ALL DIMENSIONS ARE IN MILLIMETERS AND (INCHES).
TOLERANCES UNLESS OTHERWISE SPECIFIED
X.X ± 0.5 (0.020) X XX ± 0.13 (0.005)
●BLACK DOT INDICATES INPUT SIDE

Figure 2. Mechanical Outlines

Comb Generators

The output of these devices consists of a train of very short pulses periodic with the input frequency.

In the time domain, the output is characterized by the pulse height, pulse width and the excess feed-through of the fundamental frequency component to the output.

In the frequency domain the output consists of power at all frequencies which are integral multiples of $f_{in}$ up to and beyond 18 GHz. All specifications are for 0.5 watt drive at 25°C case temperature

## TIME DOMAIN

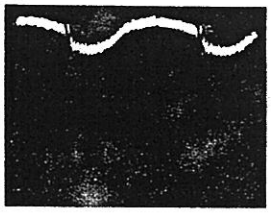

2 VOLTS/cm
2 ns/cm

**Figure 3. Impulse Waveform 33002A/B (100 MHz)**

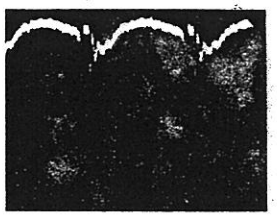

2 VOLTS/cm
1 ns/cm

**Figure 4. Impulse Waveform 33003A/B (250 MHz)**

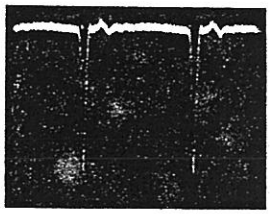

3 VOLTS/cm
500 ps/cm

**Figure 5. Impulse Waveform 33004A/B (500 MHz)**

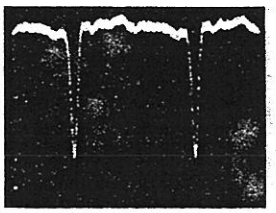

2 VOLTS/cm
200 ps/cm

**Figure 6. Impulse Waveform 33005C/D (1000 MHz)**

## FREQUENCY DOMAIN

In the frequency domain the output is characterized by a line spectrum. The spacing of the lines is equal to the input frequency. Fundamental frequency feedthrough is approximately 15 dBm with 27dBm input power.

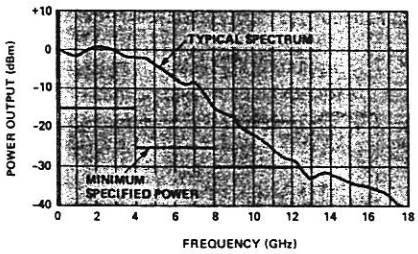


**Figure 7. Spectrum Envelope of 33002A/B (100 MHz)**

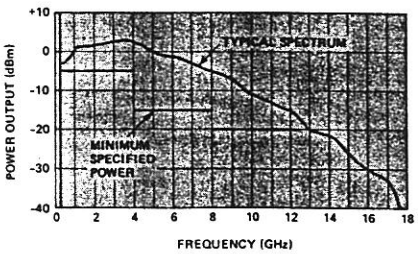


**Figure 8. Spectrum Envelope of 33003A/B (250 MHz)**

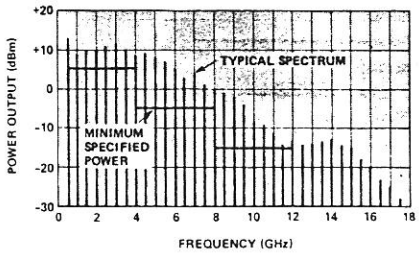


**Figure 9. Spectrum Envelope of 33004A/B (500 MHz)**

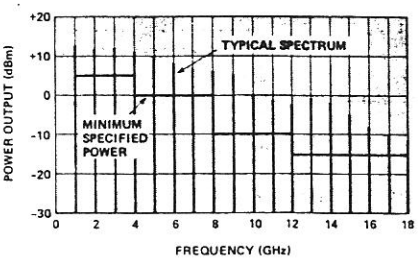


**Figure 10. Spectrum Envelope of 33005C/D (1000 MHz)**

## INPUT SWR

The input SWR is a function of the input power. The devices have all been optimized for minimum SWR at the nominal center frequency with .5 watt drive. Below .5 watts, the SWR begins increasing. The point of minimum SWR may be adjusted if external bias is applied to the diode ("B" and "D" versions only, which have no DC return).

### SWR Characteristics

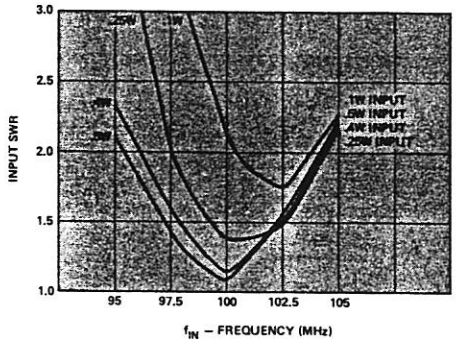


Figure 11. 33002A/B

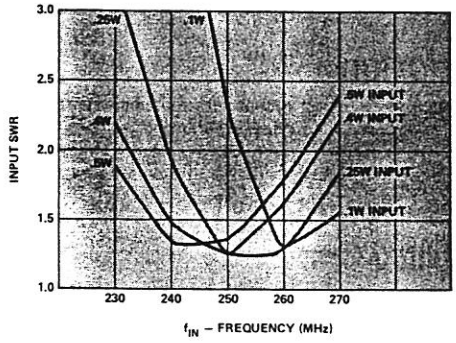


Figure 12. 33003A/B

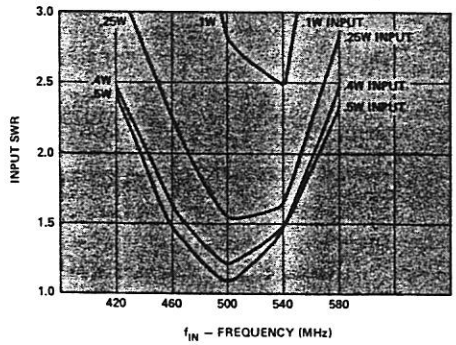


Figure 13. 33004A/B

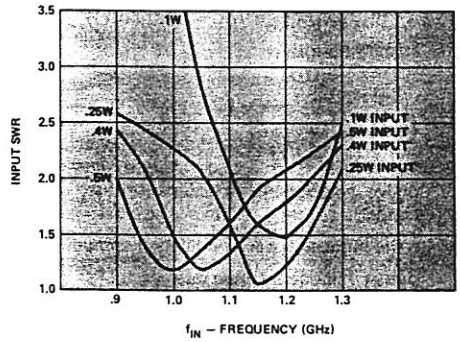


Figure 14. 33005C/D

## TEST SET-UPS

Comb generators can be measured in the time domain using a very fast sampling scope, or in the frequency domain using several sweepers (as local oscillators), mixers and an IF amplifier. Measurements made using a spectrum analyzer must be interpreted very carefully because of the large number of spurious responses when driven by the extremely wideband comb generated by these devices. Use of a tracking preselector (HP 8445B) helps eliminate these spurious responses.

Comb Generators