REVISION HISTORY				
ZONE	REV	DESCRIPTION	DATE	APPROVED

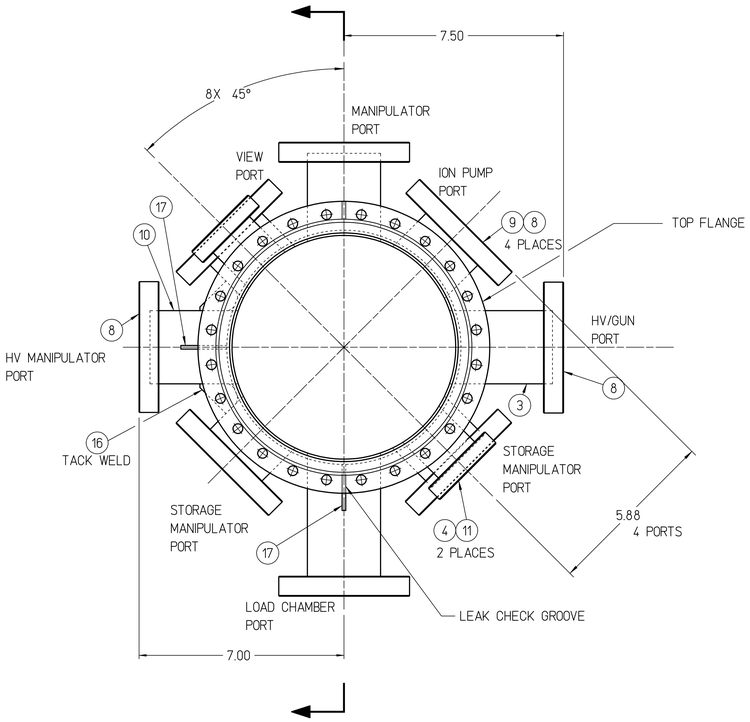

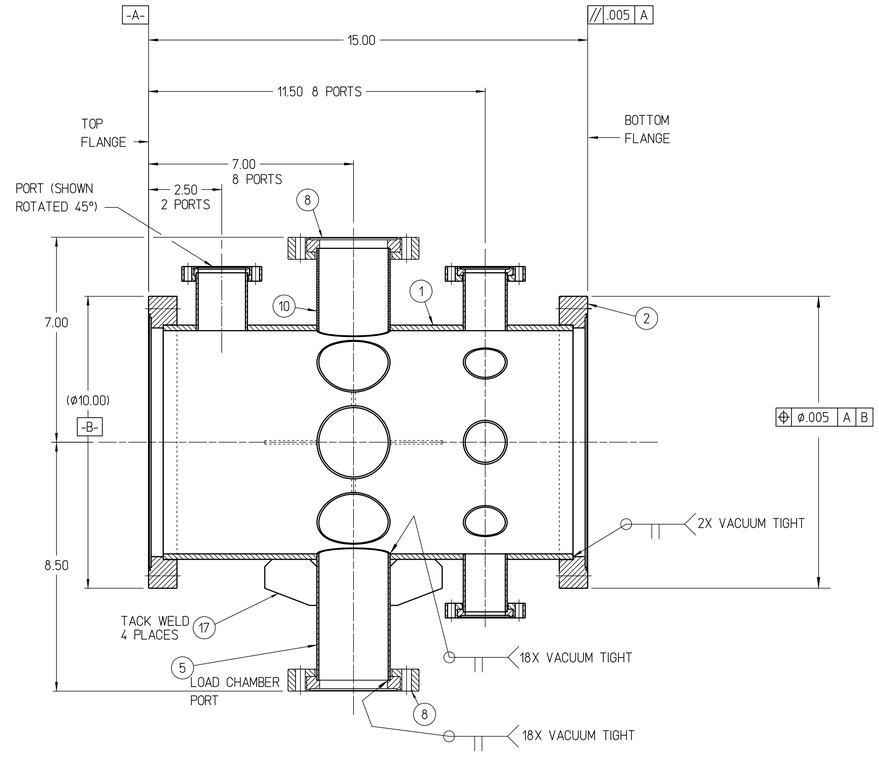

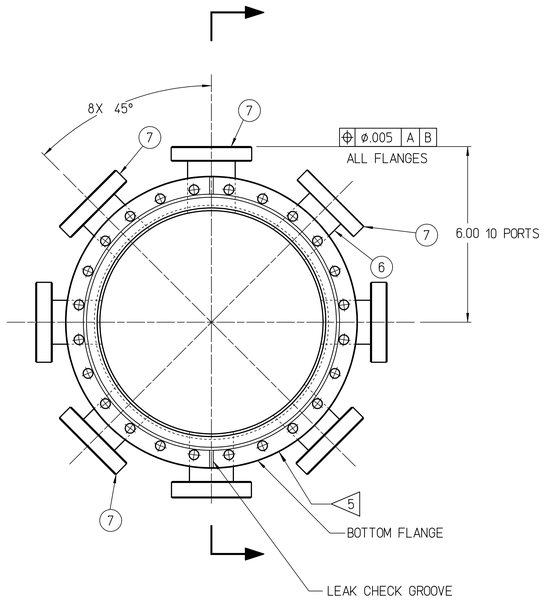

NOTES:

1. USE THE FOLLOWING JLAB SPECIFICATIONS
   FABRICATION OF ULTRA HIGH VACUUM EQUIPMENT: #22631-S-001
   CLEANING AND HANDLING OF U.H.V. COMPONENTS: #22632-S-001
   WELDING SPECIFICATION FOR U.H.V. COMPONENTS: #22633-S-001
   HELIUM LEAK TEST FOR U.H.V. COMPONENTS: #22634-S-001
   SPECIFICATION FOR MANUFACTURE OF UHV CHAMBER: #FEL0000000-S-0005
2. ALL TOLERANCES APPLY AFTER WELDING.
3. SKIM CUT 63 FINISH INSIDE DIAMETER OF 8.00 TUBE (ITEM 1) PRIOR TO WELDING ON TUBES.
4. 10.00 FLANGES (ITEM 2) SHALL BE ORIENTATED SUCH THAT THE LEAK CHECK GROOVES ARE IN LINE AND AS SHOWN. ALL OTHER FLANGES SHALL BE ORIENTATED SUCH THAT THE LEAK CHECK GROOVES ARE PARALLEL WITH THE 10.00 FLANGES.
5. PART NUMBER TO BE ENGRAVED OR ETCHED IN LOCATIONS SHOWN USING MIN. .25 HIGH CHARACTERS.
6. PROTECT FLANGE FACES DURING AND AFTER PROCESSING WITH SUITABLE PLASTIC CAPS. DAMAGE TO KNIFE EDGES IS UNACCEPTABLE.
7. ESTIMATED WEIGHT - 55 LBS
8. SUGGESTED FABRICATION SEQUENCE:
   A. WELD ITEMS 3,4,5,6,9,10,16 AND 17 TO ITEM 1.
   B. ELECTROPOLISH SUB-ASSEMBLY.
   C. BAKE SUB-ASSEMBLY FOR 3 HOURS AT 900°C IN A VACUUM FURNACE PUMPED DOWN TO LESS THAN 3 X 10 E-6 TORR.
   D. WELD FLANGES TO SUB-ASSEMBLY.

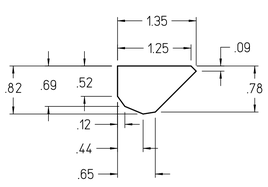

CHOCK DETAIL-1

SCALE: 1:1

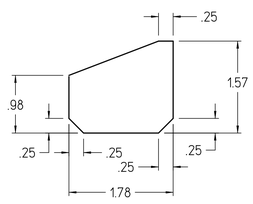

CHOCK DETAIL-2

SCALE: 1:1

QTY. REQD	ITEM NO.	PART OR IDENTIFYING NO.	NOMENCLATURE OR DESCRIPTION	MATERIAL SPECIFICATION	NOTES
4	17		CHOCK DETAIL-2	304 STAINLESS STEEL .12 THICK PLATE	
2	16		CHOCK DETAIL-1	304 STAINLESS STEEL .12 THICK PLATE	
	15				
	14				
	13				
	12				
2	11	MDC# 100042	CF FLANGE, ROTATABLE 2.75 O.D. X 1.75 I.D	STAINLESS STEEL	
2	10		TUBE, 2.50 O.D. X .065 WALL X 3.08 LG.	304 STAINLESS STEEL	
4	9		TUBE, 2.50 O.D. X .065 WALL X 1.96 LG.	304 STAINLESS STEEL	
8	8	MDC# 100021	CF FLANGE, ROTATABLE, 4.50 O.D. X 2.50 I.D	STAINLESS STEEL	
8	7	MDC# 100014	CF FLANGE, ROTATABLE 2.75 O.D. X 1.50 I.D	STAINLESS STEEL	
8	6		TUBE, 1.50 O.D. X .065 WALL X 2.11 LG.	304 STAINLESS STEEL	
1	5		TUBE, 2.50 O.D. X .065 WALL X 4.58 LG.	304 STAINLESS STEEL	
2	4		TUBE, 1.75 O.D. X .065 WALL X 2.11 LG.	304 STAINLESS STEEL	
1	3		TUBE, 2.50 O.D. X .065 WALL X 3.58 LG.	304 STAINLESS STEEL	
2	2	MDC# 110033	CF FLANGE, NONROTATABLE, 10.00 O.D. X 8.00 I.D.	STAINLESS STEEL	
1	1		TUBE, 8.00 O.D. X .25 WALL X 13.00 LG., ENDS CUT SQUARE	304 STAINLESS STEEL	

PARTS LIST

EACH SHEET OF A MULTI-SHEET DRAWING SHALL ALWAYS CARRY THE SAME REVISION LEVEL

FOR JLAB INTERNAL USE ONLY
ALL WELDS ON THIS DRAWING ARE AS DEFINED BY JLAB ES & H MANUAL, WELDING & BRAZING PROGRAM SUPPLEMENT

WELD CLASS: C

WELD SPECIFICATION: 22633-S-001

WELD ANALYSIS: N/A

DOCUMENT CONTROL STAMP

MATERIAL: SEE PARTS LIST

FINISH MACHINED SURFACES: 63 √ UNLESS OTHERWISE NOTED

DEBURR & BREAK ALL SHARP EDGES

DO NOT SCALE DRAWING

DIM & TOL PER ASME Y14.5
UNLESS OTHERWISE SPECIFIED
DIMENSIONS ARE IN INCHES
TOLERANCES ARE:
FRACTIONS ± X ± .01 DECIMAL XX ± .005 XXX ± .005 ANGLES ± .50°

THIRD ANGLE PROJECTION

TRACKING NO. N/A

APPROVALS	DATE
DRAWN D. MACHE	26JUN14
CHECKED B. MATT POELKER	7/3/14
APPROVED P. ADDERLEY	7/3/14
APPROVED B. MATT POELKER	7/3/14

Thomas Jefferson National Accelerator Facility
NEWPORT NEWS, VIRGINIA
UNITED STATES DEPARTMENT OF ENERGY

ACC
INJECTOR
CsK2Sb DEPOSITION CHAMBER
DEPOSITION CHAMBER-V2

SIZE E | DWG. NO. ACC-200-6000-0110 | REV. –

SCALE 1:2 | USED ON ASSY NO. ..... | SHEET 1 OF 1

Me10