PARTS LIST		
PART NUMBER	NUMBER REQD	DESCRIPTION
2	2	Ø .125 X .313 LG, DOWEL PIN, 18-8 SST
59	8	SCREW, SOC HD, .312-18 X 1.50 L, SST
60	1	MAGNETIC SHIELDS, DRWG #95Y-225416

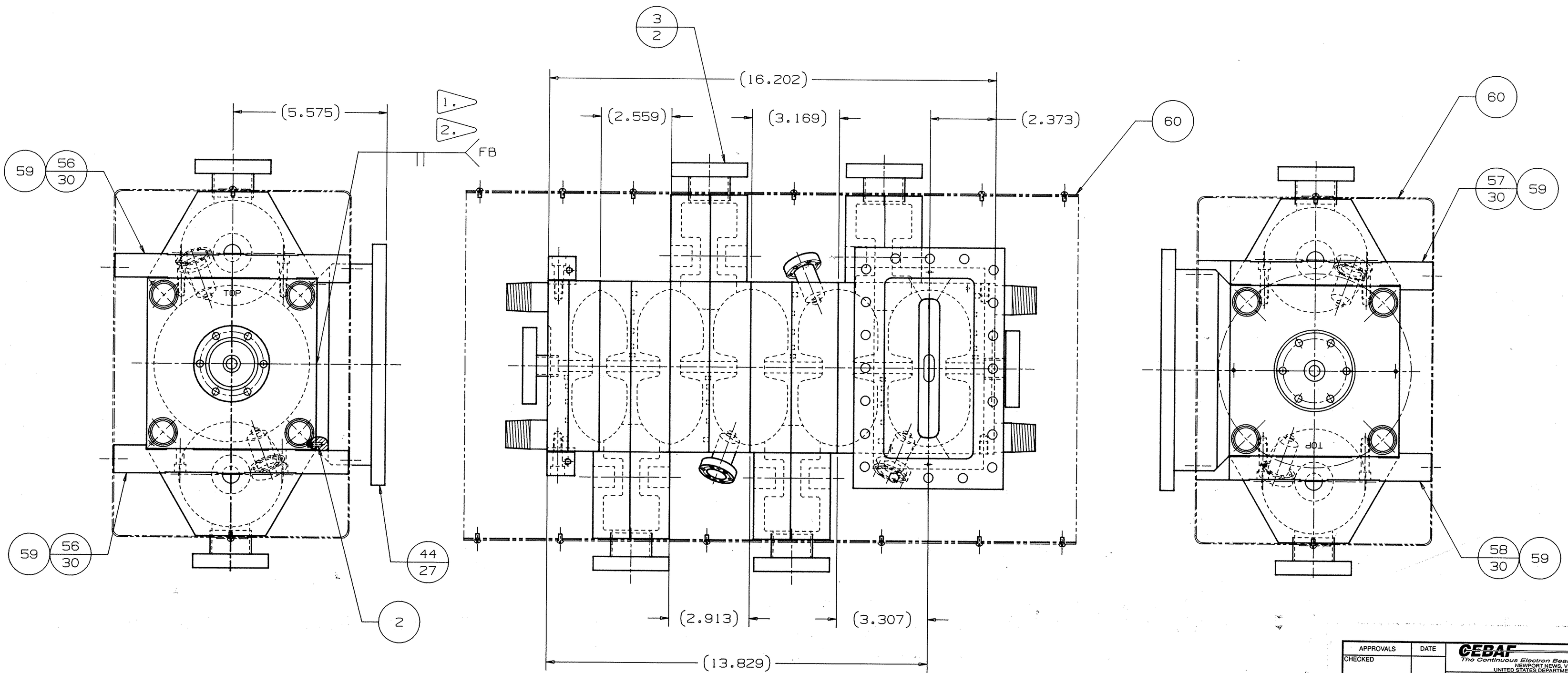

1 MATL: NOTED
1 REQD

PROCESS STEPS:

1. HYDROGEN FURNACE BRAZE USING 2 MIL FOIL (63 Ag-27 Cu-10 IN) INCUSIL AT 1380°F.
2. VACUUM LEAK CHECK AFTER BRAZING, LEAK NOT TO EXCEED $1X10^{-9}$ STD cc/sec He.

7. SURFACE TEXTURE PER ANSI B46.1-1978.
6. WELDING SYMBOLS PER ANSI/AWS A2.4-79.
5. DIMENSIONING AND TOLERANCING PER ANSI Y14.5M-1982.
4. CSK 82° X .030 DEEP ALL DRILLED HOLES.
3. CSK 82° ALL TAPPED HOLES TO MAJOR DIAMETER.
2. BREAK ALL SHARP EDGES.
1. ALL DIMENSIONS ARE IN INCHES.

GENERAL NOTES: (UNLESS OTHERWISE NOTED)

APPROVALS	DATE
CHECKED	
APPROVED	
APPROVED	
APPROVED [signature]	20 May 91

CEBAF
The Continuous Electron Beam Accelerator Facility
NEWPORT NEWS, VIRGINIA
UNITED STATES DEPARTMENT OF ENERGY

INJECTOR RF SYSTEM
CAPTURE SECTION
1497 MC ACCELERATOR

DWG. NO. FØØØ3DØ1
USED ON ASSY NO.
SHEET 1 OF 30

REVISION LETTER	CLASS REVIEW	REVISIONS	DATE	CHANGED BY	CHECKED BY	APPROVED BY
	PLR	ORIGINAL ISSUE	—	—	—	—

Los Alamos
Los Alamos National Laboratory
Los Alamos, New Mexico 87545

CLASSIFICATION OF DRAWING: UNC
PART: UNC TITLE BLOCK: UNC

TITLE
1497 MHZ ACCELERATOR
CEBAF

ASSEMBLY, BRAZED

	SIGNATURE	DATE	GROUP
ORIGINATED	L. Young	81	AT-1
DRAWN	SE/FC	2/88	AT-1
CHECKED	PL Roybal	8/10/88	AT-1
PROJ. ENGR.			
APPROVED	L. Young	8/15/88	AT-1
RELEASED	[signature]	8/12/88	AT-1

TOLERANCE-(UNLESS OTHERWISE NOTED)
X=± ____ 0.XX =± .02 ANGULAR=± ____
0.X=± ____ 0.XXX=± .005 FINISH = ____

SCALE	TOTAL SHEETS	DRAWING NO.	SHEET SIZE	NO.
1/2	30	95Y-225408	D	1