Modifying the spherical electron gun (R30) to reproduce the tee electrode gun (R28) beam focal length

- Overview (Carlos)
- Electrode optics re-design strategy (Max, Gabriel)
- Beam model ensuring gun designed optics matches injector acceptance (Alicia)

Carlos Hernandez-Garcia
Max Bruker
Alicia Hofler
Gabriel Palacios-Serrano

BTeam meeting, February 13th, 2024

Comparing the two electron guns

Gun design	R28	R30
Status	Operational (140 kV)	Stored in LERF cleanroom
Electrode	Tee	Spherical
Pierce focusing angle (deg)	25	25
Max operational voltage (kV)	180	200
Beam focal length (cm)	~60	~6

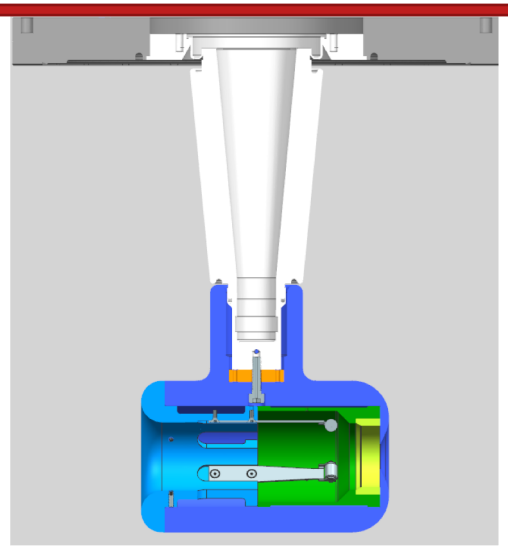

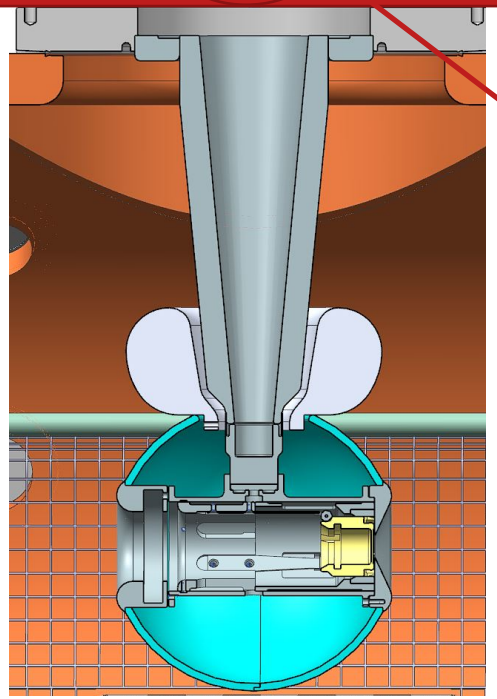

- Installed in CEBAF SAD'23
- Produced 200 keV beam w/o field emission
- Beam envelope incompatible with injector acceptance
- Achieved spec vacuum conditions
- Replaced by R28 at end of SAD'23

Strategy

- ❑Aim for the smallest possible hardware change: Pierce focusing cathode front end
- ❑Benchmark our 3D CST simulation software with 2D POISSON + GPT
- ❑Benchmark R28 CST+GPT vs. actual beam phase space
- ❑Optimize R30 gun Pierce focusing angle to reproduce as best as possible R28 gun focal length (CST+GPT)
- ❑Simulate geometry tolerance bands (CST) to ensure worst case is within injector acceptance (GPT)

Parameter	Unit	Nominal value	Fabrication uncertainty	Simulation band	Comments
Hole inner radius	mm	6.4135	+/- 0.3?	+/- 0.3	to edge of actual metal, as measured with caliper
Pierce angle	°	16	?	+/- 2	
Cone/sphere junction angle	°	30	?	30 -- 62	was 62°; smooth transition = 26.971°
Cathode recess	mm	0.188	0.05	0.1	from Keith's drawing; error may be larger for old pucks
Cathode tilt	°	0	+/- 0.5	1	
Laser spot size (RMS)	mm	0.5	0.1	0.2	

Table by M. Bruker

Objective: Fix beam envelope focal length by re-designing the R30 cathode front to achieve ~ similar focal length as with R28 gun

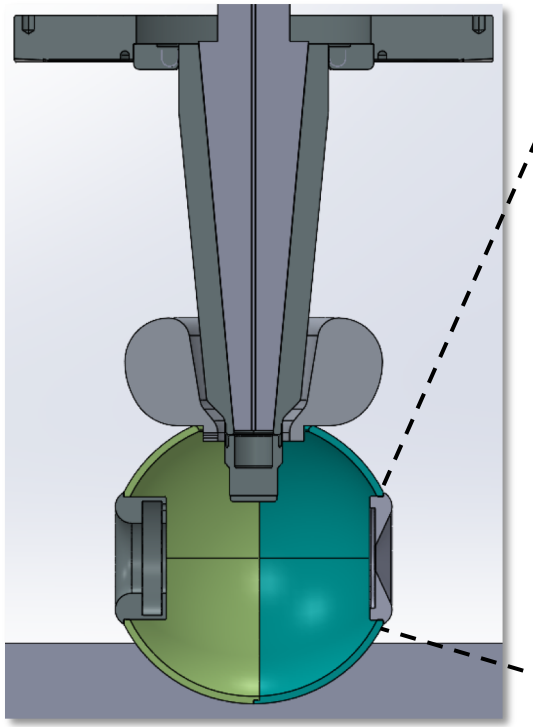

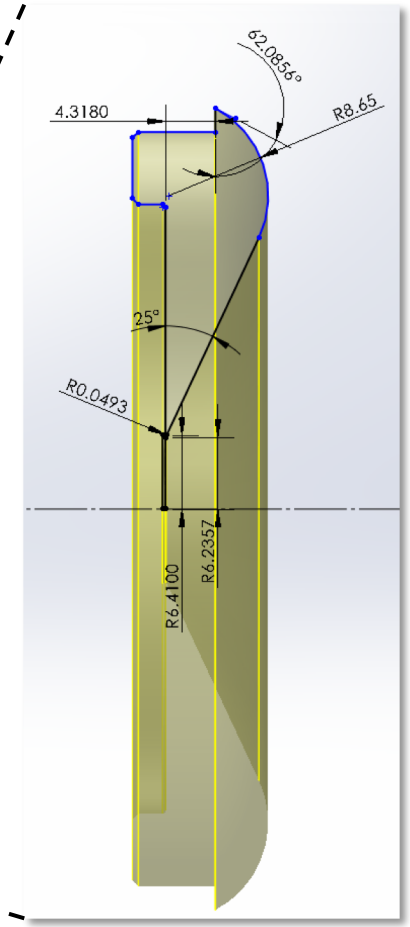

Swap 25 deg for 16 deg

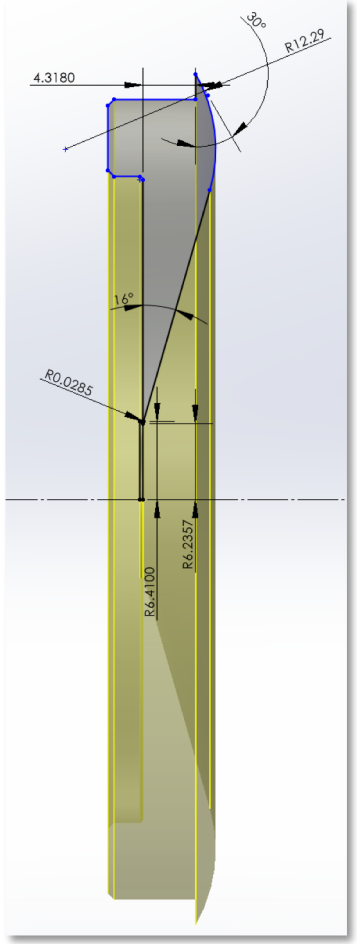

Existing 25 deg Pierce angle cathode

Optimal 16 deg Pierce angle cathode

Gun swap plan overview

1	Task	January	February	March	April	May	June	July	August
2	Electrostatic/beam sims benchmarking								
3	Cathode optics design								
4	Cathode ME design								
5	Cathode fabrication								
6	Cathode prep and R30-4 gun assembly								
7	Swap R28-2 gun for R30-4 gun								
8	R30-4 gun install, bake, and HV processing								
9	Beam initial checks + contingency (unlikely!)								
10	Contingency								

Backup

R30-4 gun electrostatic potential and gradient map at 200 kV

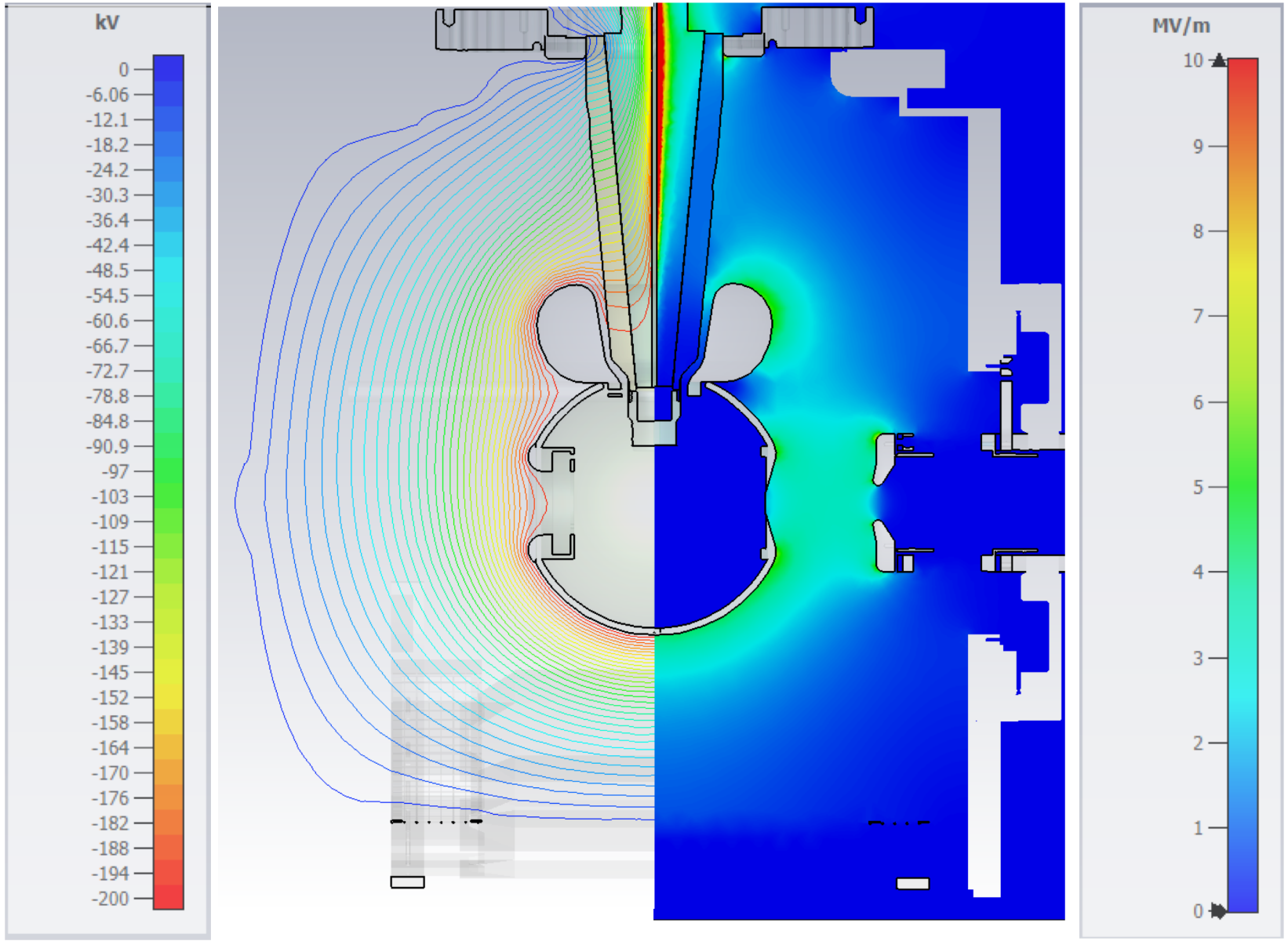

Models by Gabriel Palacios

Jefferson Lab

Establishing confidence in the R30-4 gun design

Max Bruker, Gabriel Palacios-Serrano
Center for Injectors and Sources

February 13, 2024

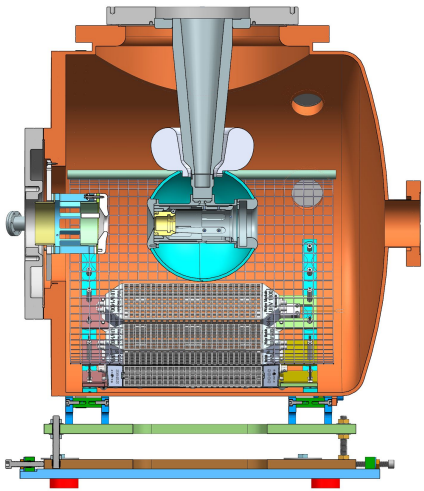

Jefferson Lab

U.S. DEPARTMENT OF ENERGY | Office of Science

JSA

Comparing R28-2 and R30-3 at 200 kV

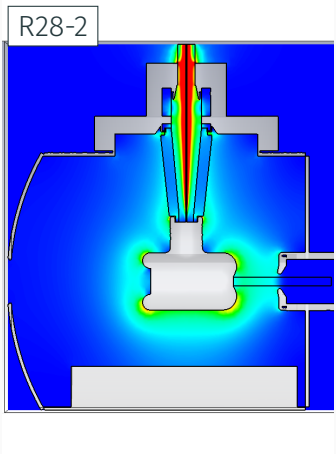

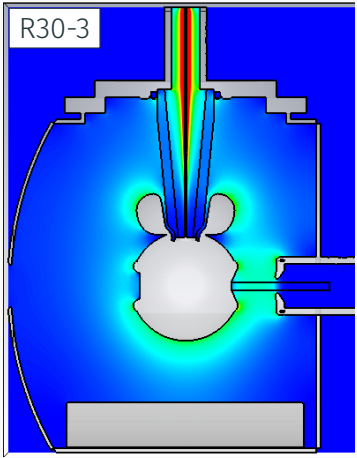

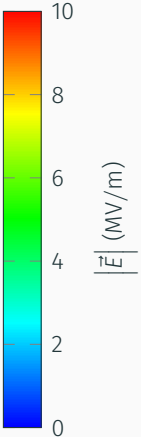

Jefferson Lab

Objective: mitigate risk by understanding tolerances & sensitivities

- R30-3 was mostly good, but beam parameters not well-matched to injector
- We are making a small change, small risk of undesired side effects
- Need to understand discrepancies between simulation and reality to gain confidence in predictions
- In principle, everything can be simulated...
  - Use software that works
  - Use it correctly
  - Model the actual problem

Poisson vs. CST into GPT

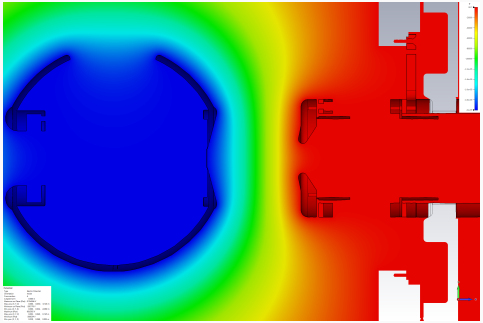

- sanity check: uncover potential errors related to how we build the models and propagate the data

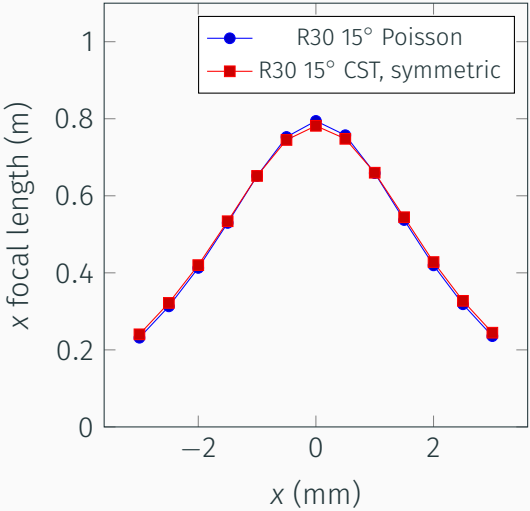

Jefferson Lab

Identifying model deficiencies

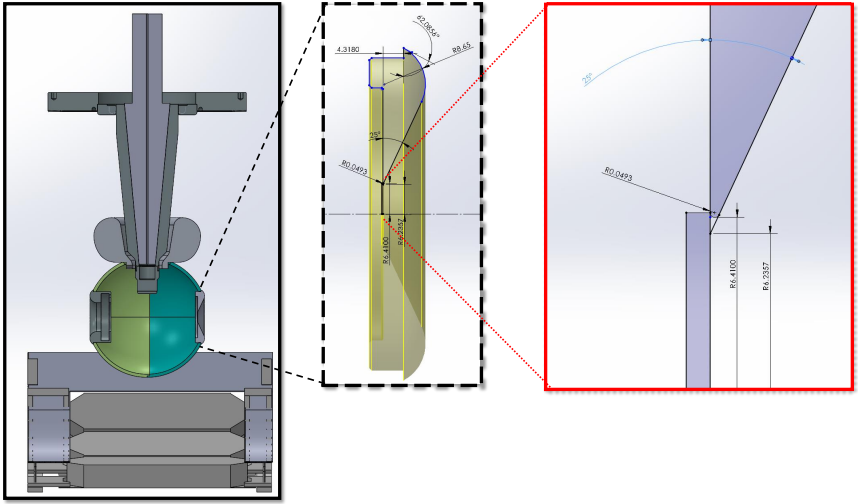

Jefferson Lab

R28 simulation vs. reality

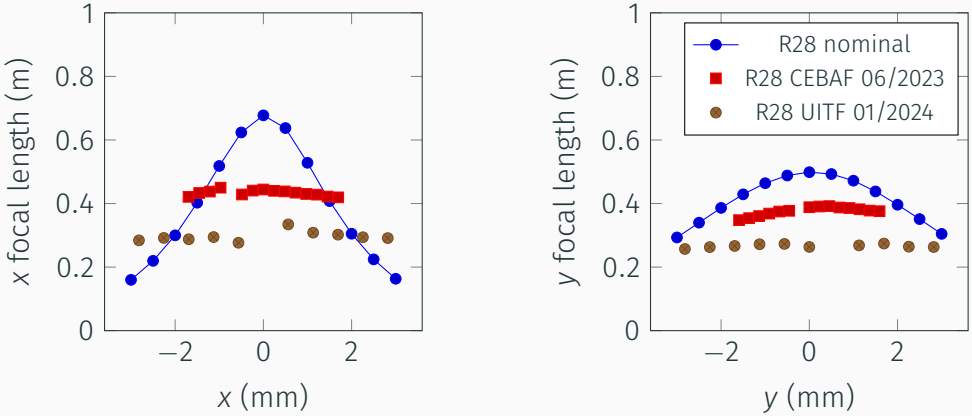

- Can be explained by farther-than-nominal cathode recess (−0.2 mm)

R30-3 vs. R28

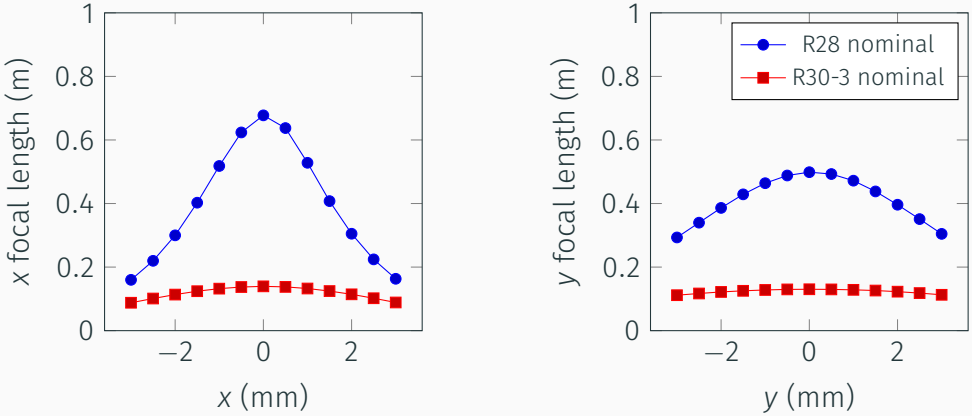

- Strong focusing is a feature of the nominal geometry

R30-4: nominal design to match R28

- Design could be driven by injector needs
- Many possible solutions, no clear optimum
- Baseline: reproduce R28
  - Hole $r = 6.41\,\mathrm{mm}$ like R28 (R30-3: ≈ 5.6)
  - Pierce angle 16° (R30-3: 25)
  - Junction angle 30° (R30-3: 62)

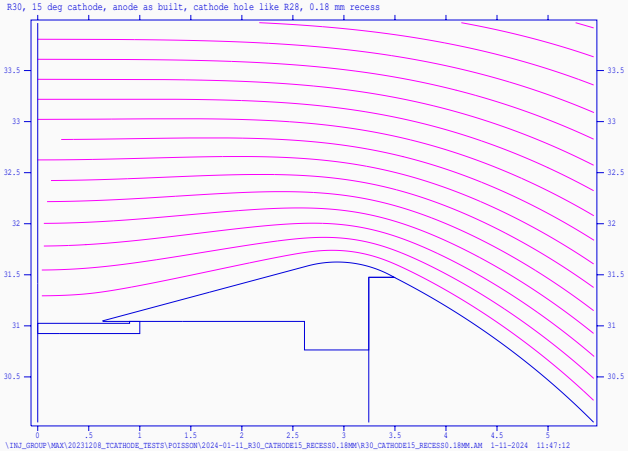

Jefferson Lab

R30-4 error study: hole radius

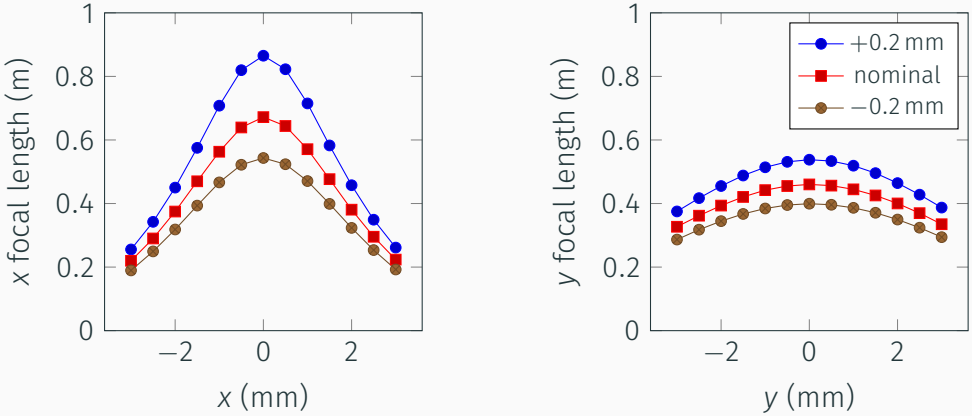

- Strong dependency: need to control fabrication tolerance

R30-4 error study: cathode recess

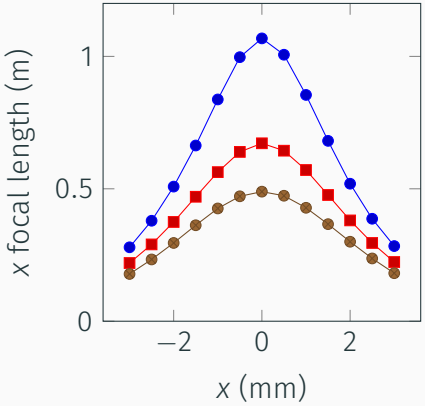

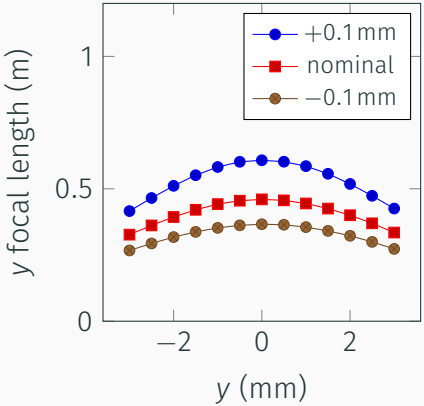

- Cannot change tolerance of existing pucks; need to accept it

Conclusions

- Gun optics highly dependent on minor details of geometry
- But uncertainty is predictable
- For design:
  - Identify optimum/nominal case
  - Simulate tolerance bands, ensure worst case is within acceptance
- For model verification / injector simulations:
  - Measure actual phase space (depends on puck & spot position)
  - Determine model parameters that reproduce data

Gun/injector interface: particle distribution at $z = 0.19$ m (example)

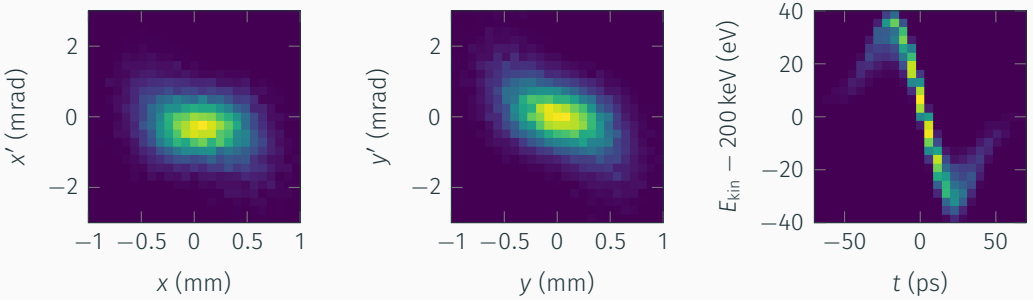

- TOF and orbit differ between guns
- Normalize all distributions to avoid changes in orbit / RF phases

Gun Comparisons

R28-2 vs. R30-4 (proposed replacement)

A. Hofler

2024/02/13

Simulation information

- Gun HV: 200 kV
- Spot Size on cathode: 0.54 mm (sigma)
- Pulse Length: 45 ps FWHM

- Distribution-based simulations
  - 10k macroparticles
  - Start at z=0.19 m from cathode
  - R28-2 results vetted against field-map-based simulations

- Beamline simulation results
  - Selected solutions from Phase 2 optimizations for
    - R28-2 no-gap field map
    - ***<u>Ideal CW</u>*** FXs
    - 200 kV
    - 170 μA @ 499 MHz
  - Settings used as-is (no tweaks)

- R28-2 nominal
  - Field map extent in z: 18 cm
  - Recessed cathode (0.18 mm)
  - Distributions
    - 0.001 and 0.340 pC
    - Generated by Max
    - Mean quantities removed
      - E.g., gun kick removed
    - In simulation shift distribution to mean t from original 170 uA no gap field map simulation for z=0.19 m
- R30-4 proposed replacement
  - 16° Pierce angle
  - 30° junction angle

R28-2 vs R30-4: beam size

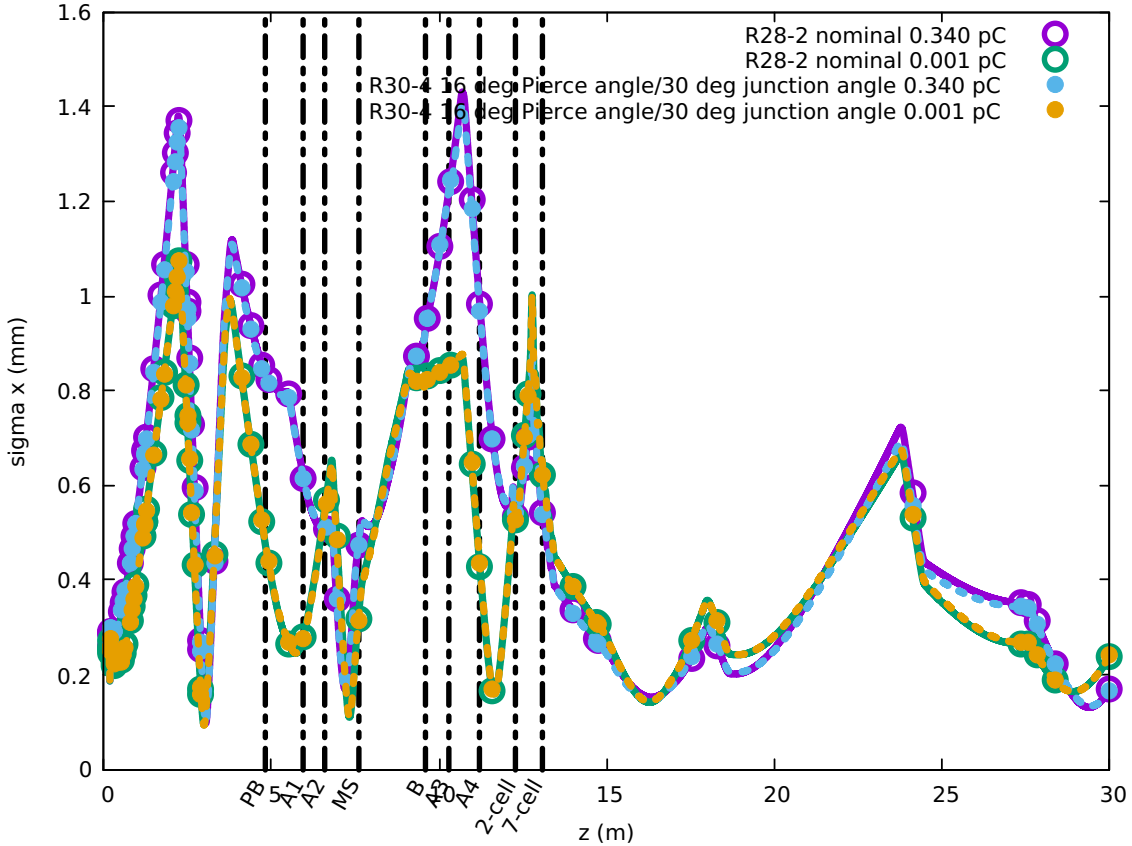

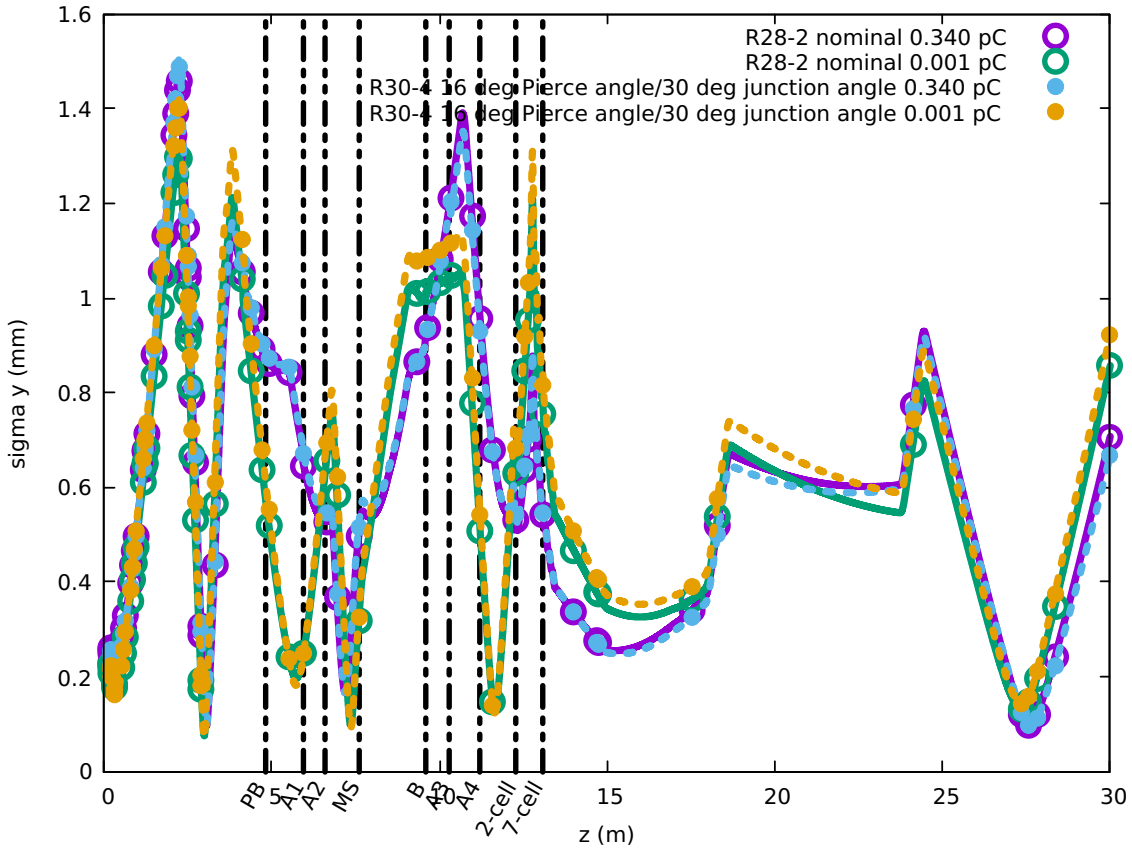

Jefferson Lab

R28-2 vs R30-4: transmission and bunchlength

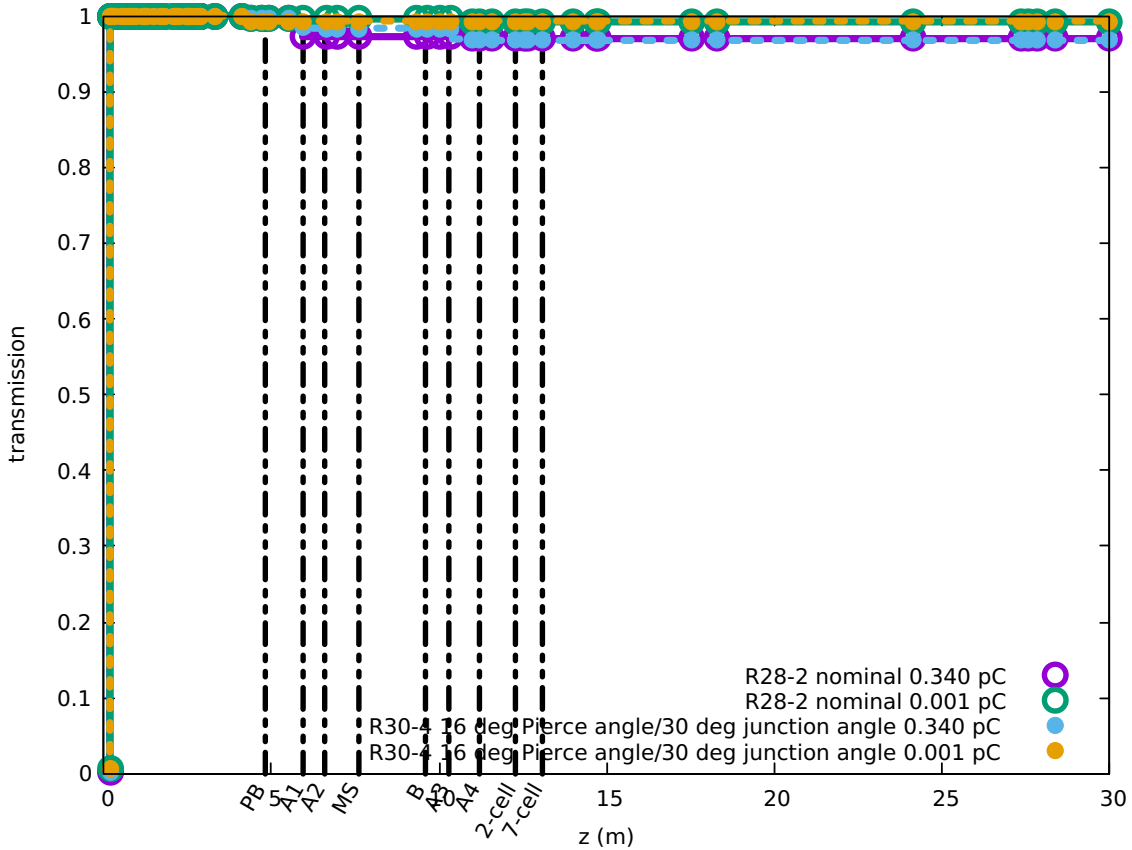

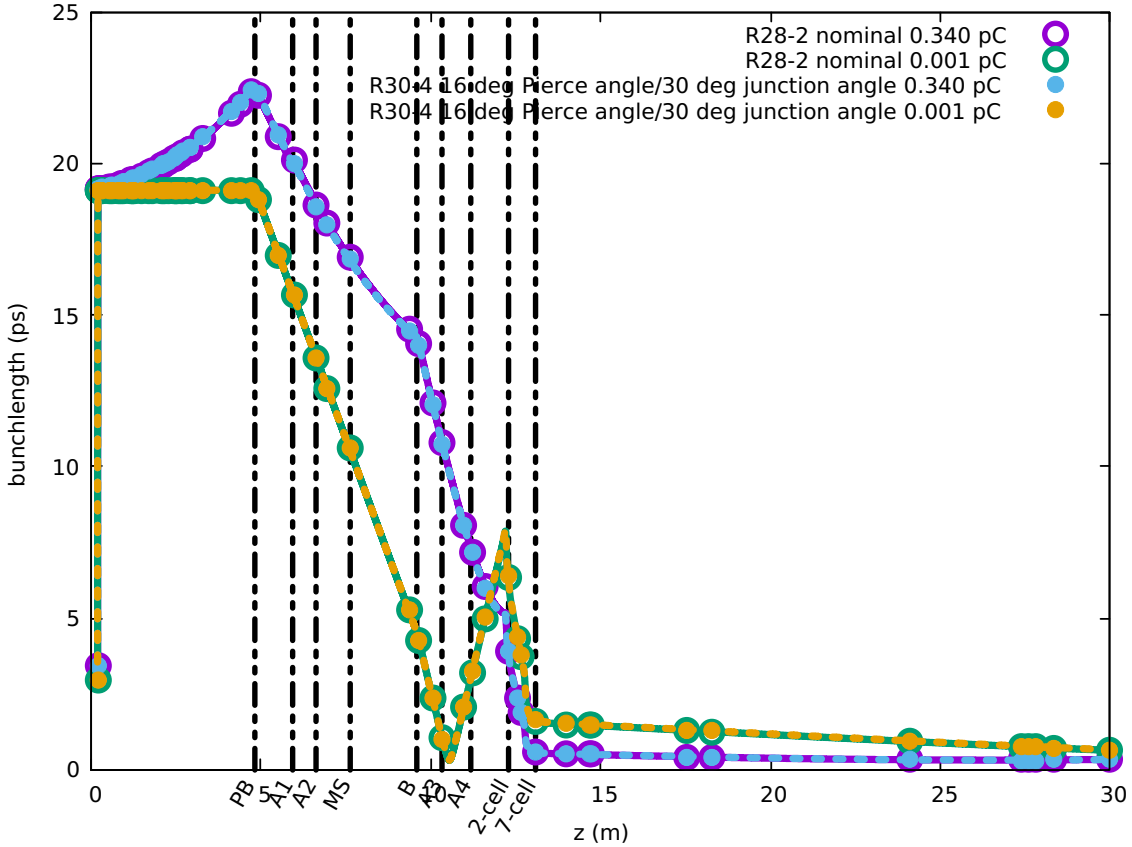

Jefferson Lab

R28-2 vs R30-4: normalized emittance

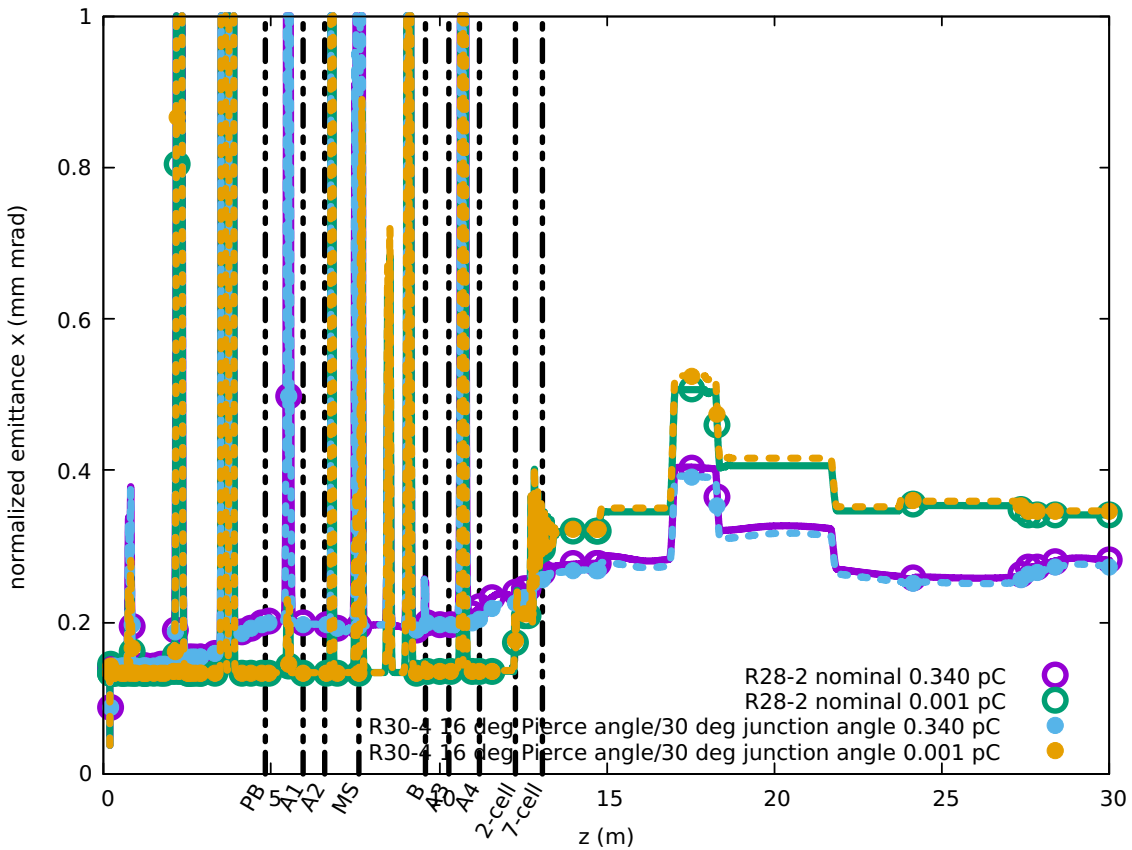

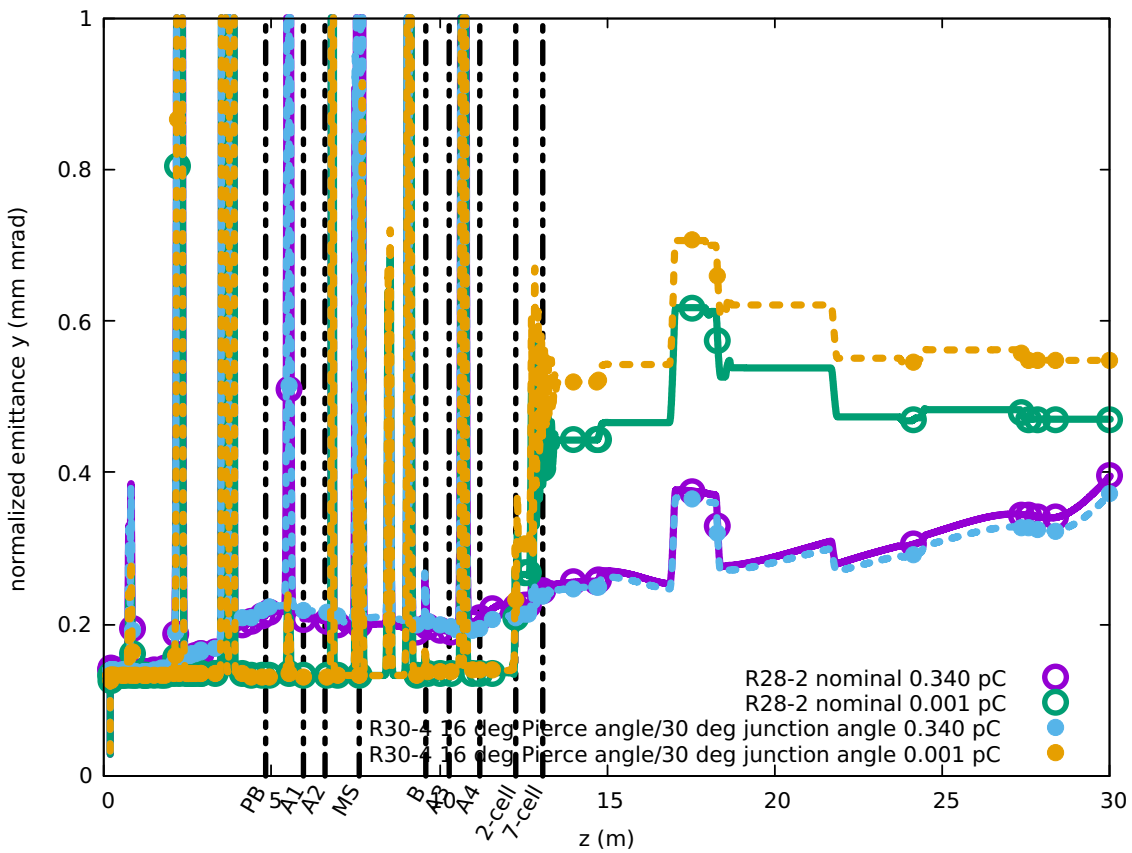

Jefferson Lab

Conclusions

- R30 geometry viable
  - With small design changes can reproduce R28-2 results
    - 16° Pierce angle and 30° junction angle

R28-2 vs R30-4: beam size (through the Booster)

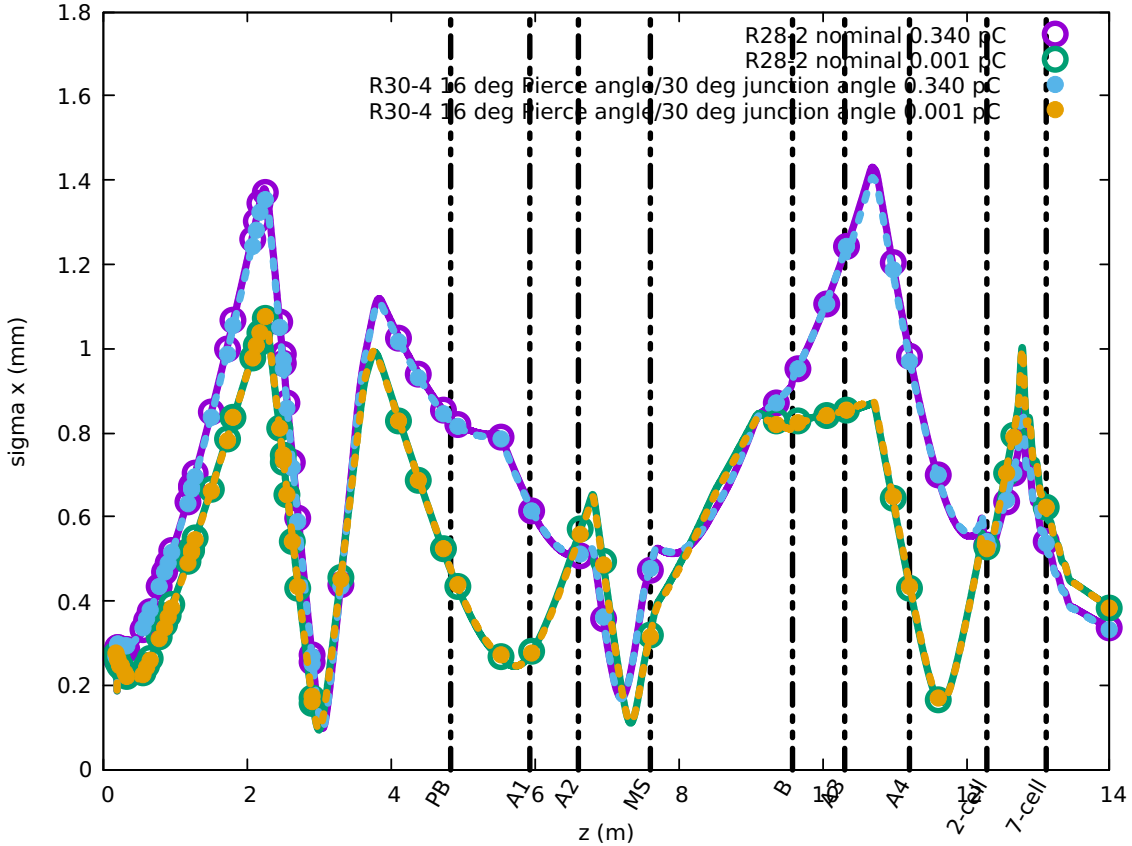

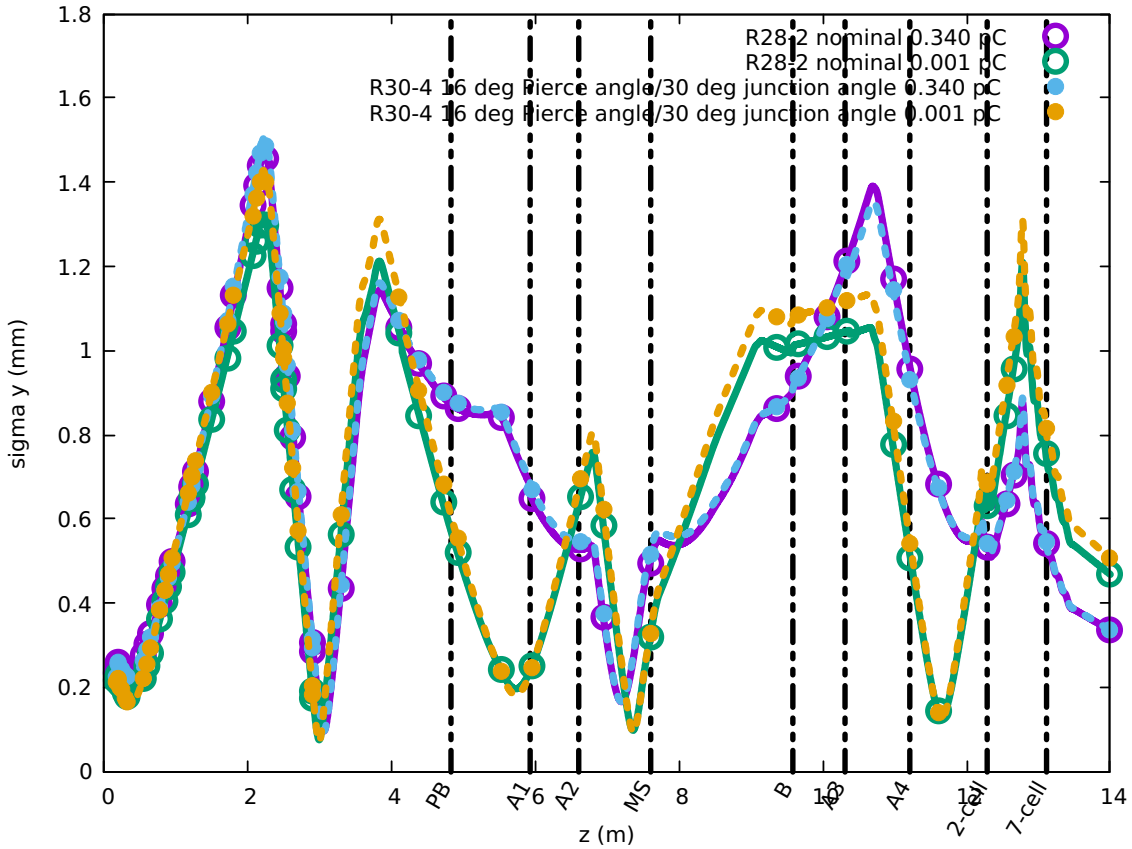

Jefferson Lab

R28-2 vs. R30-4: E_k and σ_{Ek}

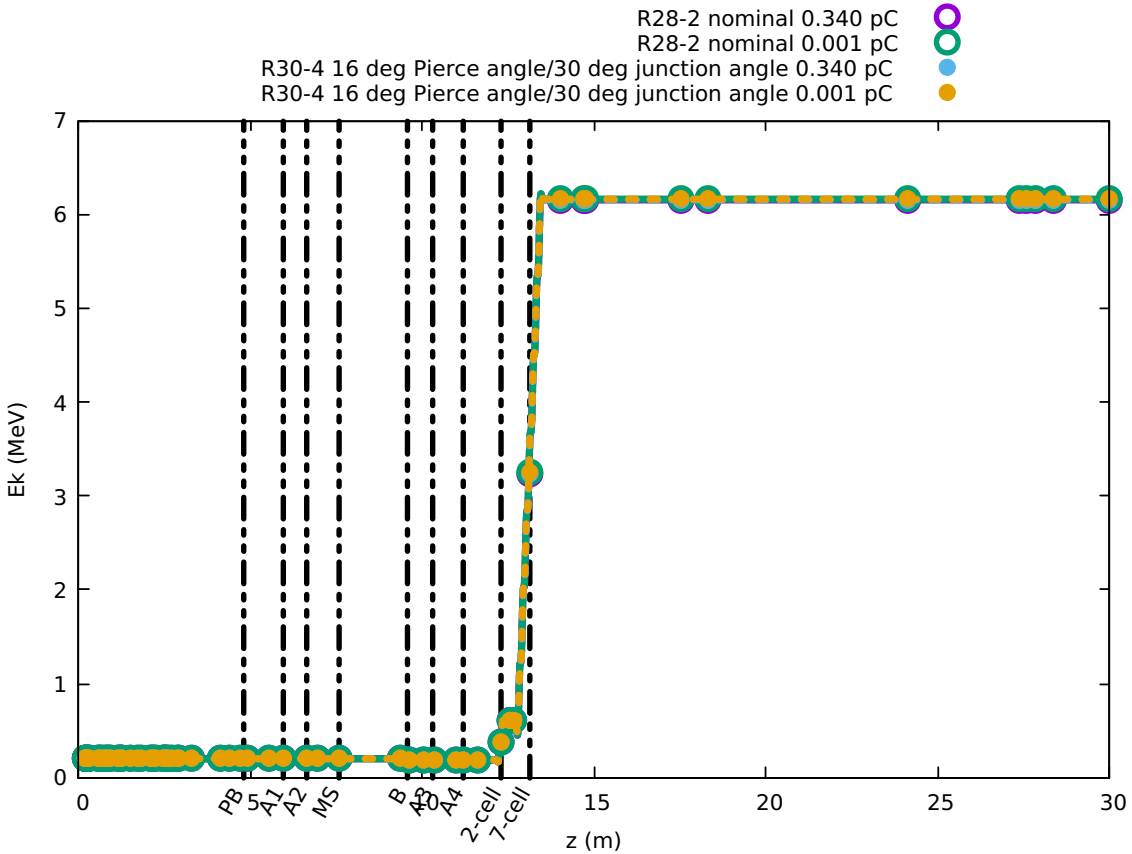

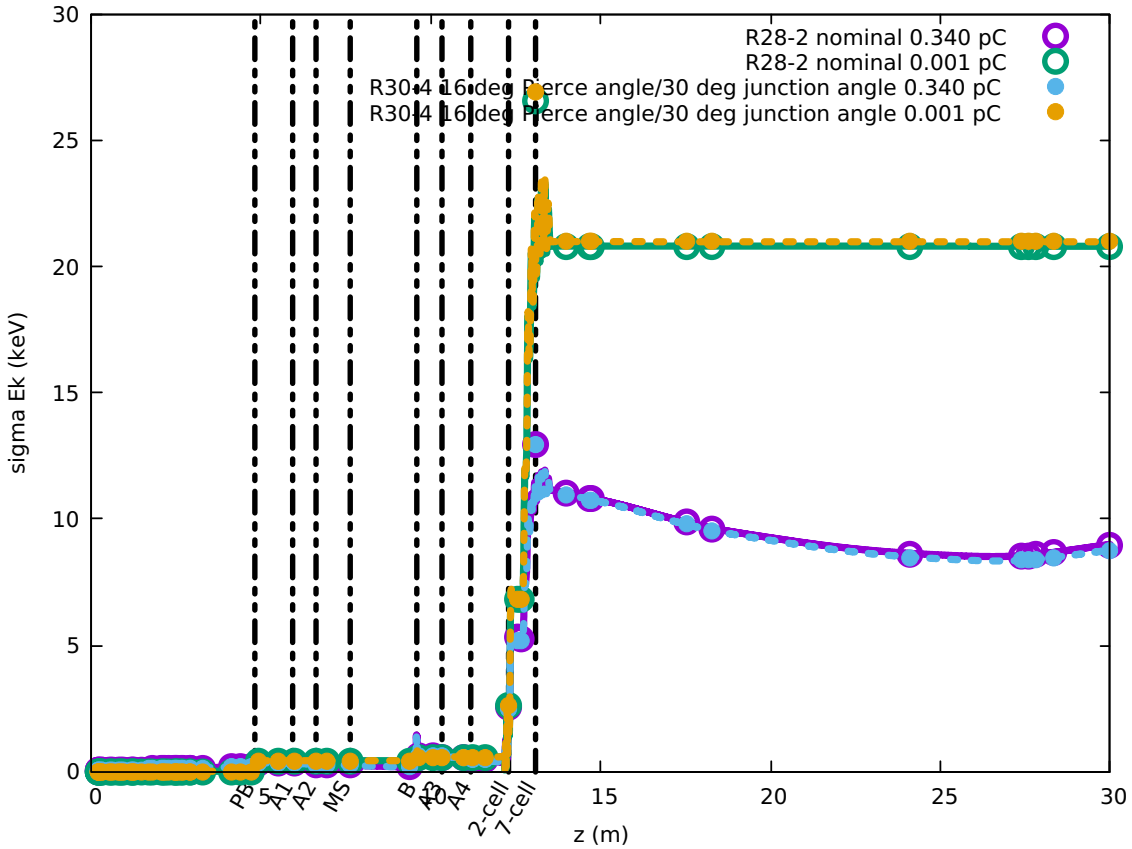

Jefferson Lab