REVISION HISTORY			
ZONE	REV	DESCRIPTION	DATE/REVISER

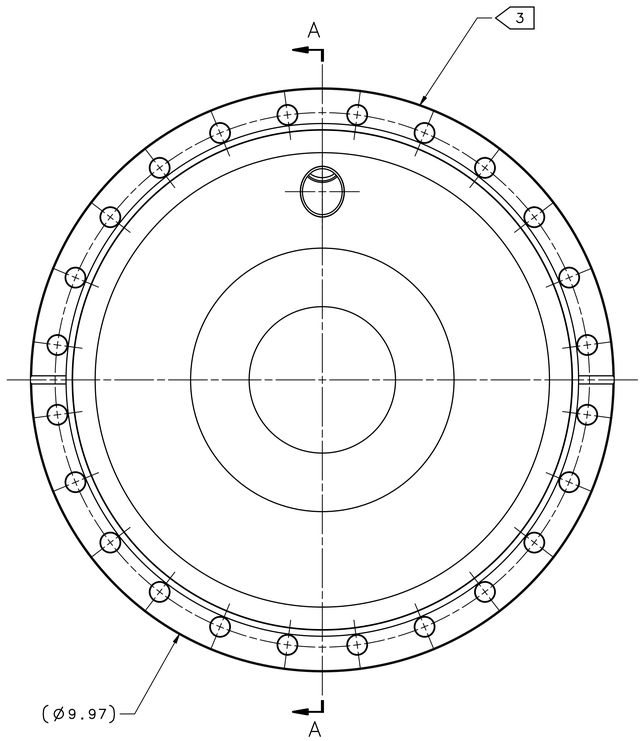

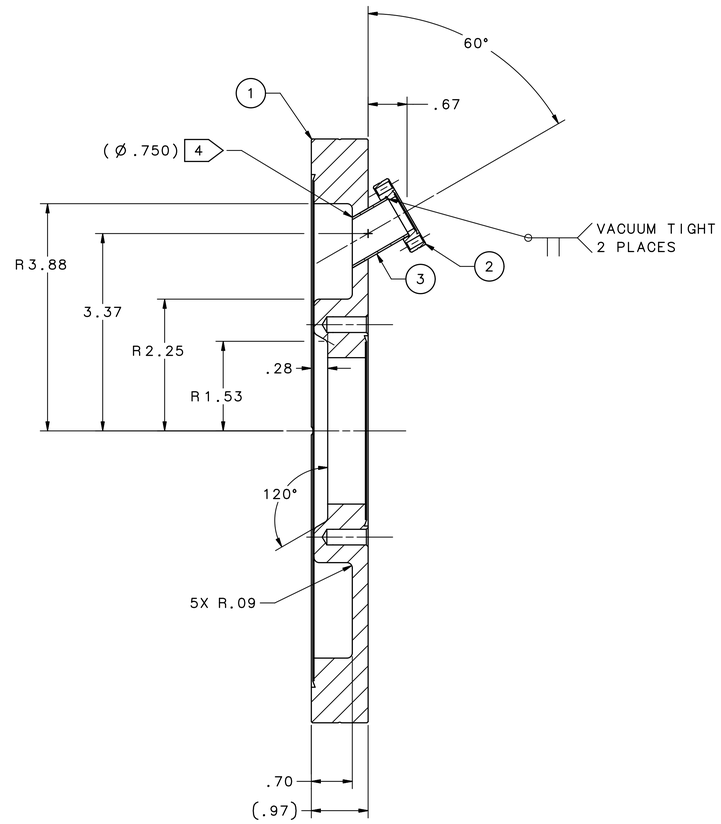

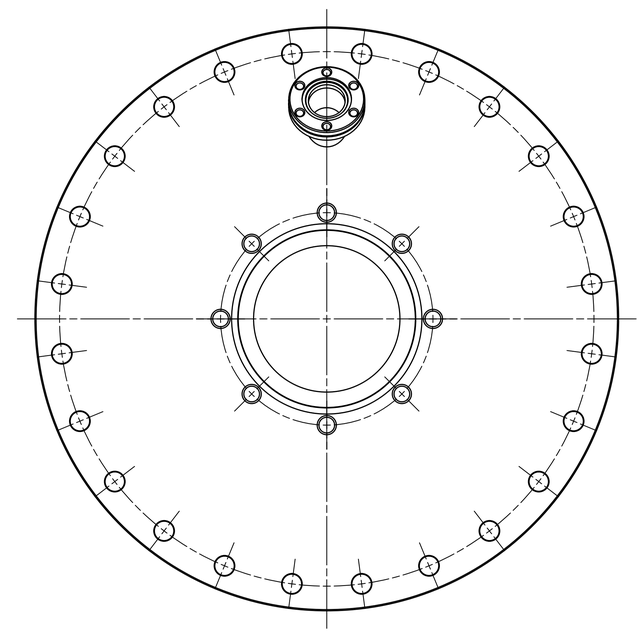

SECTION A-A

NOTES:

1. USE THE FOLLOWING JLAB SPECIFICATIONS

   FABRICATION OF ULTRA HIGH VACUUM EQUIPMENT: #22631-S-001
   CLEANING AND HANDLING OF U.H.V. COMPONENTS: #22632-S-001
   WELDING SPECIFICATION FOR U.H.V. COMPONENTS: #22633-S-001
   HELIUM LEAK TEST FOR U.H.V. COMPONENTS: #22634-S-001
   JLAB QA SPECIFICATION #91790-200
   STAINLESS STEEL FLANGES FOR UHV APPLICATIONS #23661-S-001

2. ALL TOLERANCES APPLY AFTER WELDING.

3. PART NUMBER TO BE ENGRAVED OR ETCHED IN LOCATION SHOWN USING MINIMUM .25 HIGH CHARACTERS.

4. HOLE SHALL BE MATCH BORED TO SUIT TUBING.

5. PROTECT FLANGE FACES DURING AND AFTER PROCESSING WITH SUITABLE PLASTIC CAPS. DAMAGE TO KNIFE EDGES IS UNACCEPTABLE.

QTY REQD	ITEM NO.	PART OR IDENTIFYING NO.	NOMENCLATURE OR DESCRIPTION	MATERIAL SPECIFICATION	NOTES
1	3	-	TUBE, .75 OD X .035 WALL	STAINLESS STEEL 304	-
1	2	LESKER F0133X075NT OR EQUIVALENT	FLANGE, 1.33 OD NON-ROTATABLE X .75 NOM ID TAPPED	STAINLESS STEEL 304	-
1	1	MDC 150039 OR EQUIVALENT	ZERO LENGTH REDUCER 10 X 4.5, CF FLANGE	STAINLESS STEEL 304	-

PARTS LIST

EACH SHEET OF MULTI-SHEET DRAWINGS SHALL ALWAYS HAVE THE SAME REVISION LEVEL.

DIM & TOL PER ASME Y14.5 2009. UNLESS OTHERWISE SPECIFIED DIMENSIONS ARE IN INCHES. TOLERANCES ARE:
FRACTIONS ± 1/8 — DECIMAL .X ±.1, .XX ±.02, .XXX ±.005 — ANGLES ± .50°

THIRD ANGLE PROJECTION

MATERIAL: SEE PARTS LIST

FINISH MACHINED SURFACES 63 UNLESS OTHERWISE NOTED
DEBURR & BREAK ALL SHARP EDGES

DO NOT SCALE DRAWING

DRAWN J.HOERGER — DATE 25FEB20

United States Department of Energy — Jefferson Lab, Thomas Jefferson National Accelerator Facility — Newport News Virginia

CEBAF INJECTOR
200 KeV GUN
LOAD LOCK GUN
HVC END FLANGE ASSEMBLY

SIZE E — DWG. NO. JL0091130-0101 — REV. —
SCALE 1:1 — USED ON ASSY NO. JL0091130-0100 — SHEET 1 OF 1

Approved: 3/3/2020; E-Sign ID : 413417; signed by: Ap. 1: D. Machie; Ap. 2: J. Grames; C.: S. Gregory; D: T. Fuell