Poelker, MOLLER collaboration mtg., January 23, 2015

Experiment	Energy (GeV)	Pol (%)	I (μA)	Target	A_{pv} (ppb)	Maximum Charge Asym (ppb)	Maximum Position Diff (nm)	Maximum Angle Diff (nrad)	Maximum Size Diff (δσ/σ)
HAPPEx-I (Achieved)	3.3	38.8	40	^{1}H (15 cm)	15,050	200	12	12	
G0-Forward (Achieved)	3.0	73.7	40	^{1}H (20 cm)	3,000-40,000	300±300	7±4	3±1	
HAPPEx-II (Achieved)	3.0	87.1	55	^{1}H (20 cm)	1400	400	1	0.2	
HAPPEx-III (Achieved)	3.484	89.4	100	^{1}H (25 cm)	16900	200±100	3±3	0.5±0.1	10^{-3}
PREx-I (Achieved)	1.056	89.2	100	^{208}Pb (0.5 mm)	657±60	100±130	2±3	1	10^{-4}
QWeak-I Run 2 (Achieved)	1.155	89.0	180	^{1}H (35 cm)	281±46	8±15	1±1	0.1±0.02	?
PREx-II	1.0	90	70	^{208}Pb (0.5mm)	500±15	100±10	1±1	0.3±0.1	10^{-4}
Møller	11.0	90	85	^{1}H (150 cm)	35.6±0.74	10±10	0.5±0.5	0.05±0.05	10^{-4}

Always Tweaking the Design

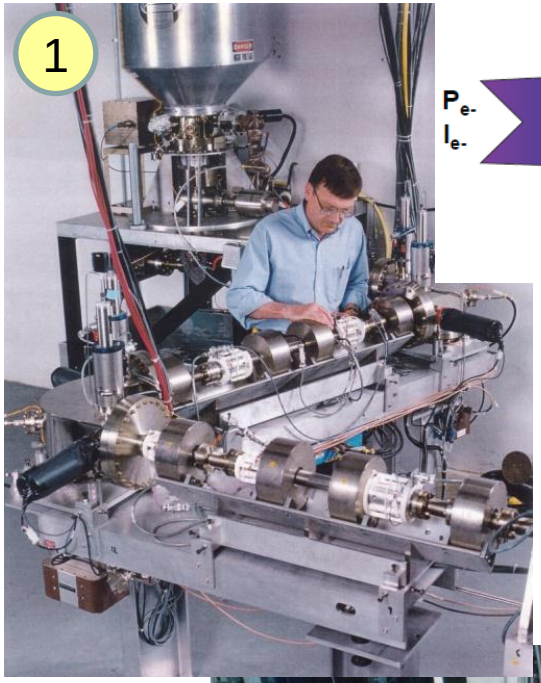

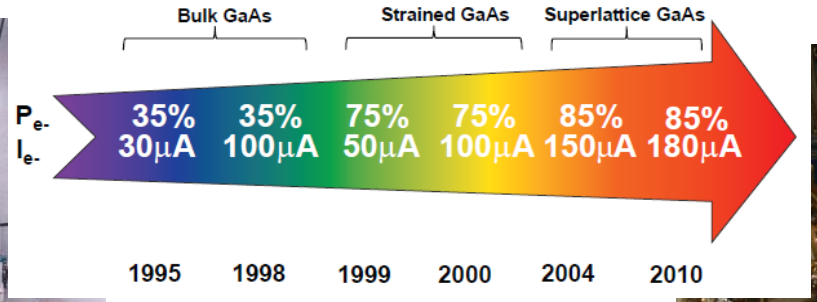

Endless quest for perfection

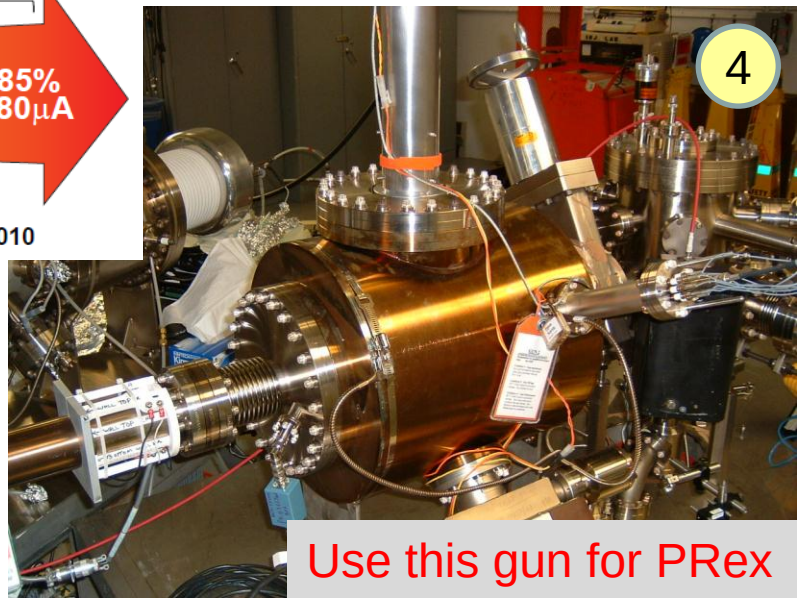

Use this gun for PRex

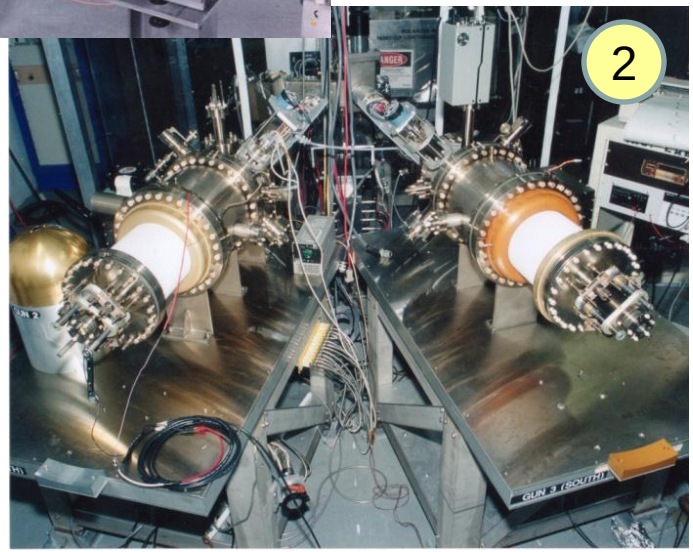

130 kV Inverted Gun

Higher Voltage = Better Transmission = Better Beam Quality
(and maybe longer lifetime)

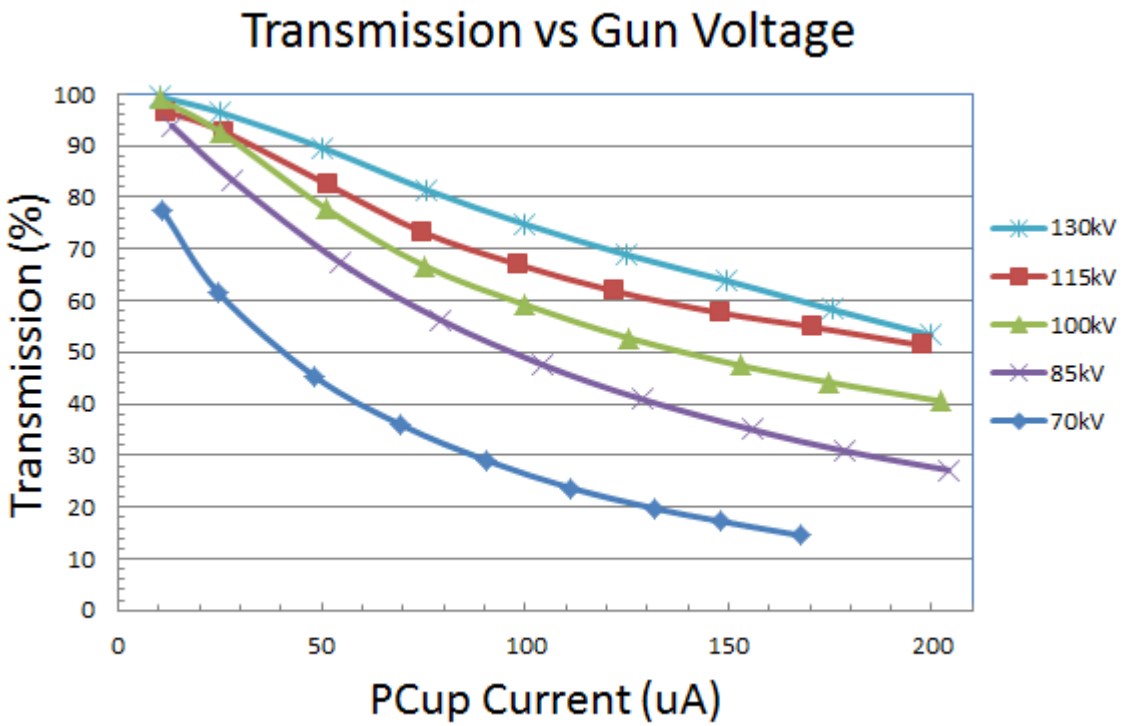

Prebuncher operating at modest power takes care of the rest

The MOLLER Injector: 200kV gun + New ¼ CM with SRF capture section

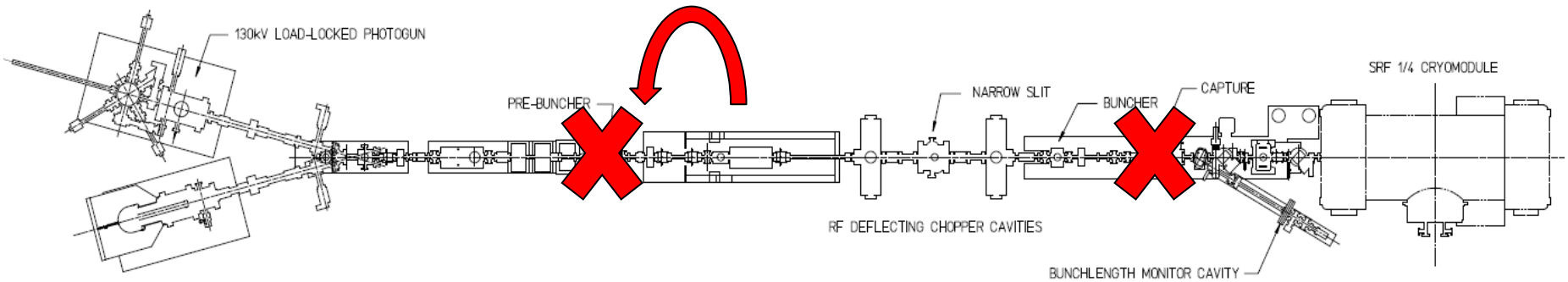

- Replace 130kV gun with 200kV gun
- Replace ¼ CM with an improved ¼ CM having an SRF capture section
- No prebuncher
- Improve the two-Wien spin flipper layout
- More attention paid to beamline vacuum

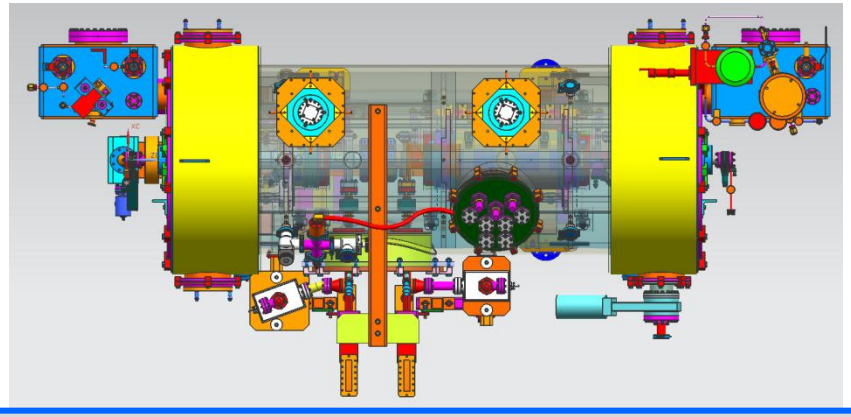

Our new “1/4 cryomodule”:
2 cell capture section + 7 cell cavity, should provide 10 MeV beam and introduce no x/y coupling, allow better matching, more adiabatic damping

4π Electron Spin Manipulation

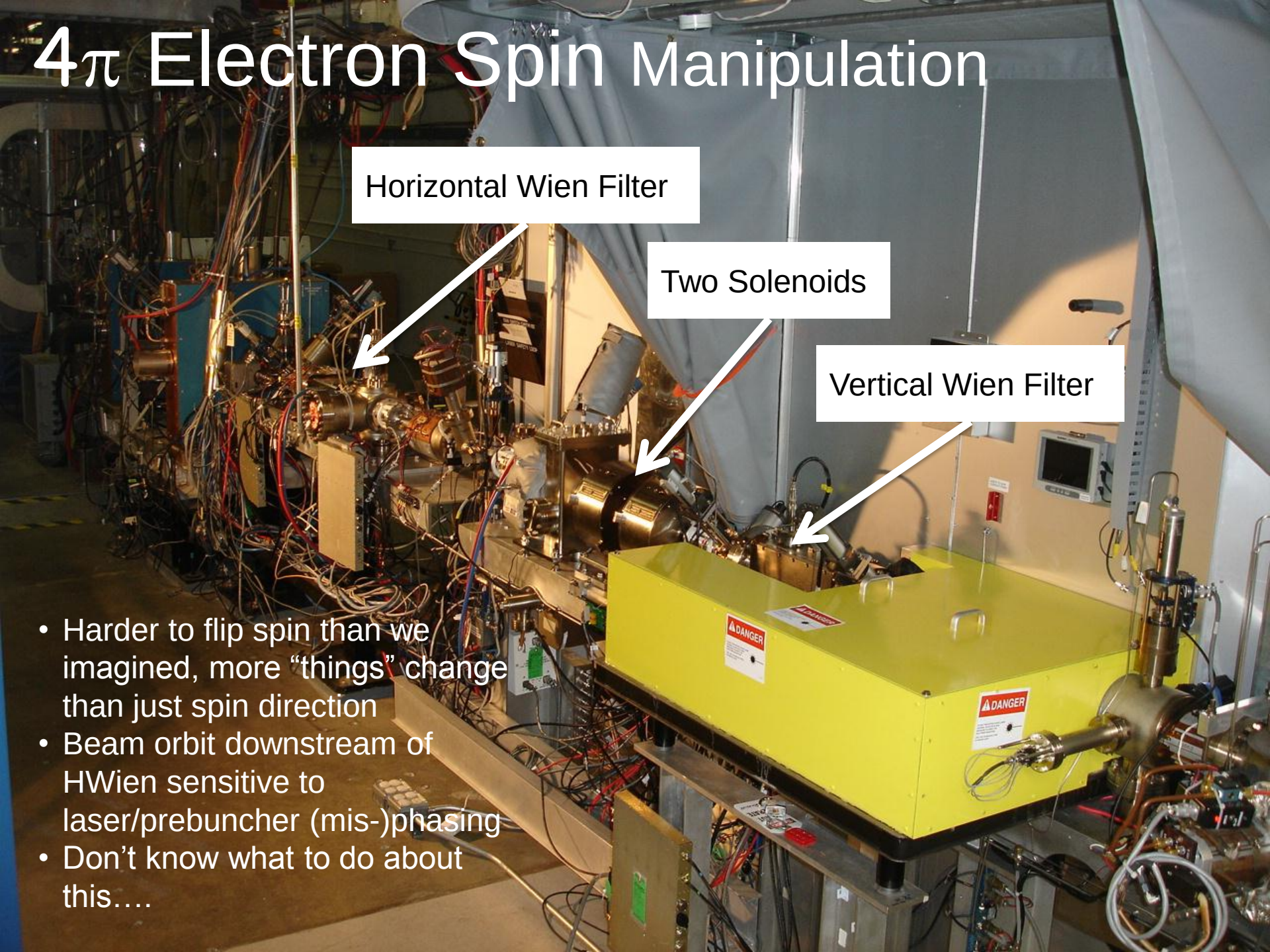

- Harder to flip spin than we imagined, more “things” change than just spin direction
- Beam orbit downstream of HWien sensitive to laser/prebuncher (mis-)phasing
- Don’t know what to do about this….

Electron Spin Reversal for PV

From Gun
LEFT
RIGHT

"Spin Reversal"
Vertical Wien = 90 deg
Two Solenoids = ±90 deg

"Longitudinal Polarization"
Horizontal Wien = {-90…+90}

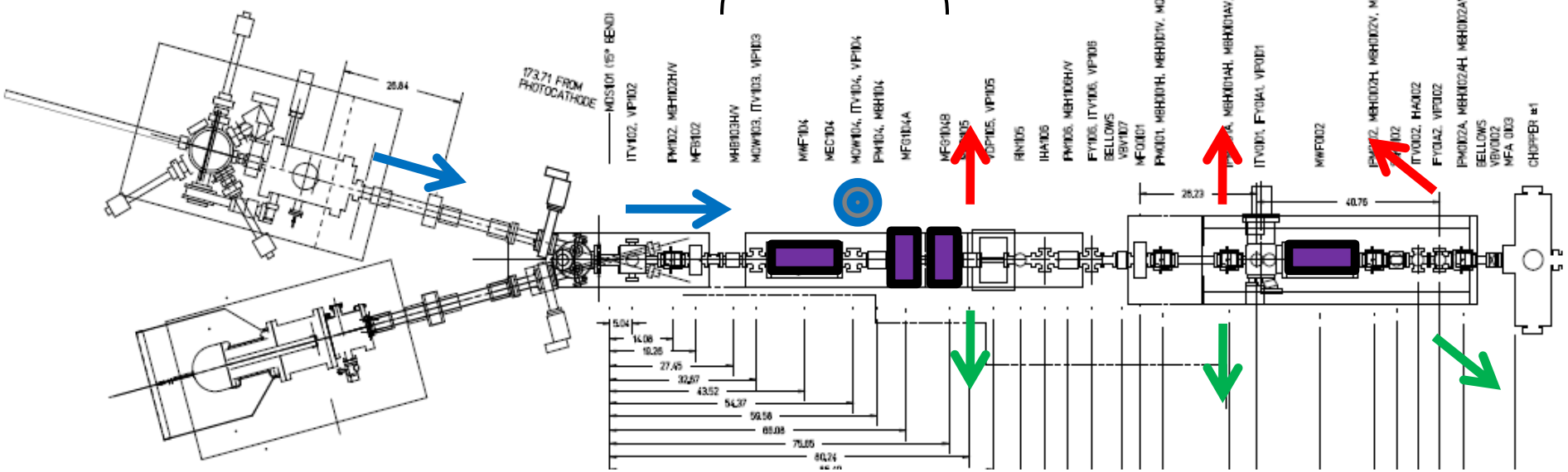

Pondering a new beamline, but will it behave differently?
Reluctant to move prebuncher for Prex. Would rather wait until we upgrade injector, and simply remove it.

Two Wien Improvements

- Do a better job characterizing optics, and compensate asymmetric focusing using quads, to achieve “perfect” spin flip
- Mis-matched E and B fields create mini-chicane, with e-beam displaced from zero potential, which introduces a time delay…

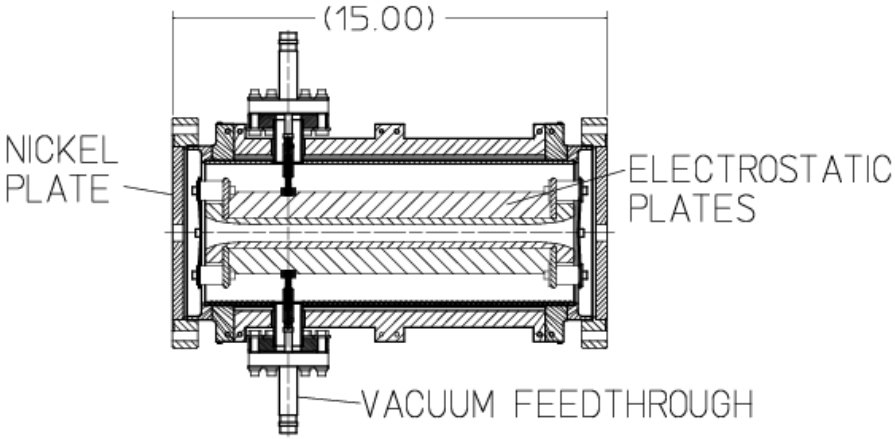

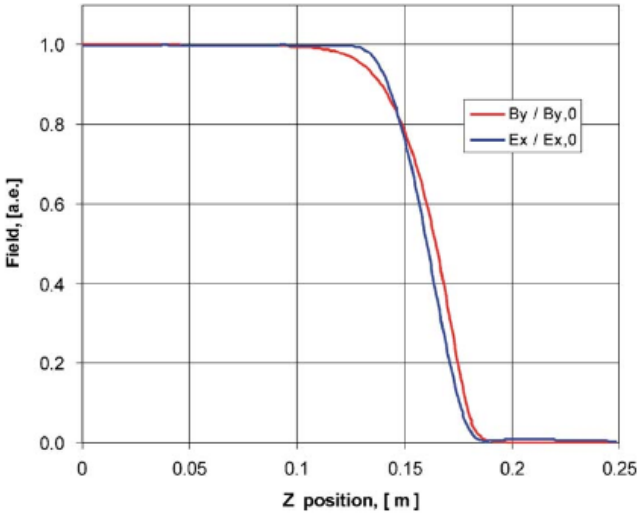

Fig. 4. Computed *E*- and *B*-field variations on the *z*-axis.

All of the same knobs exist today….

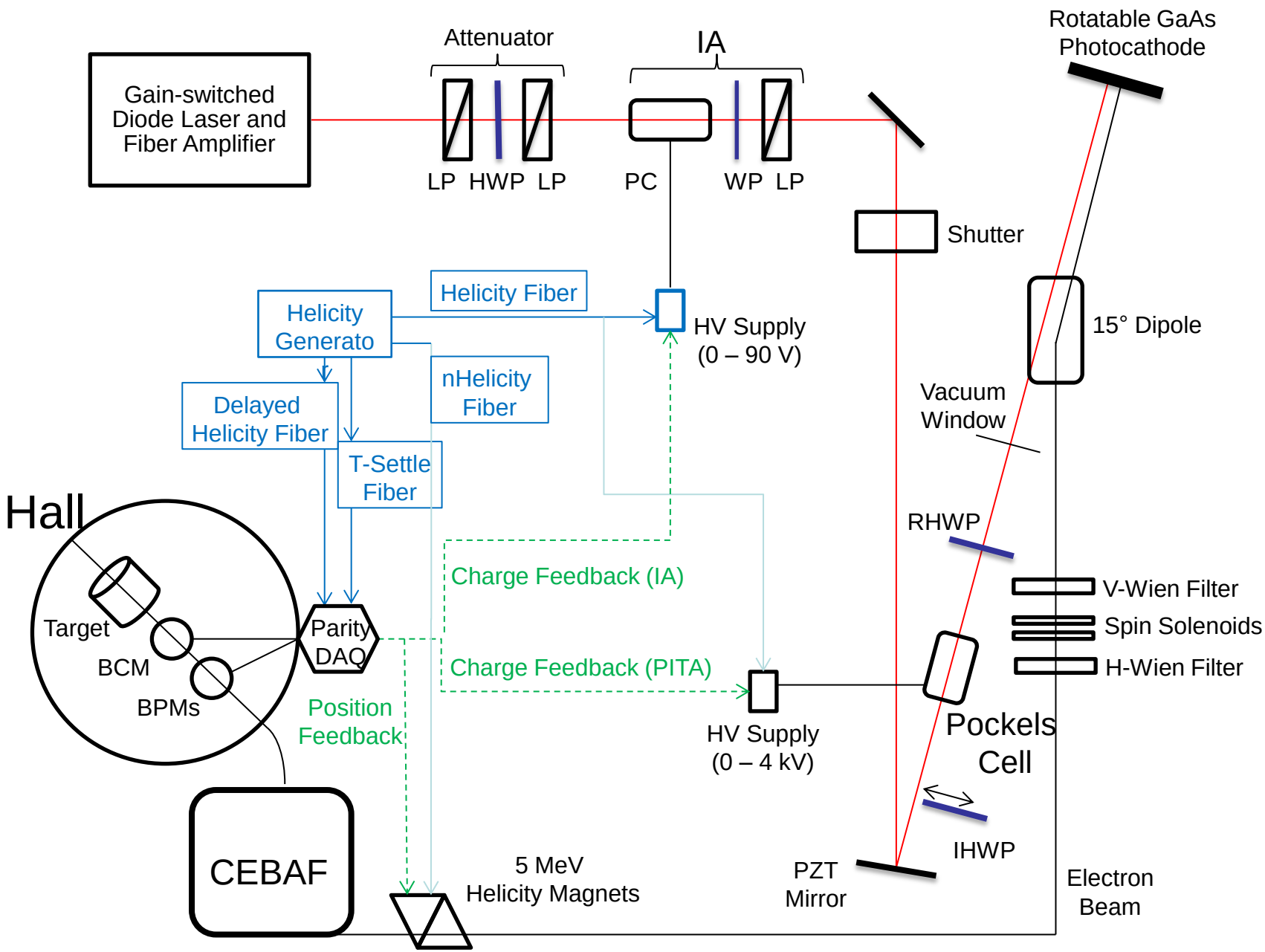

Stewart Platform: complete RC of PC alignment

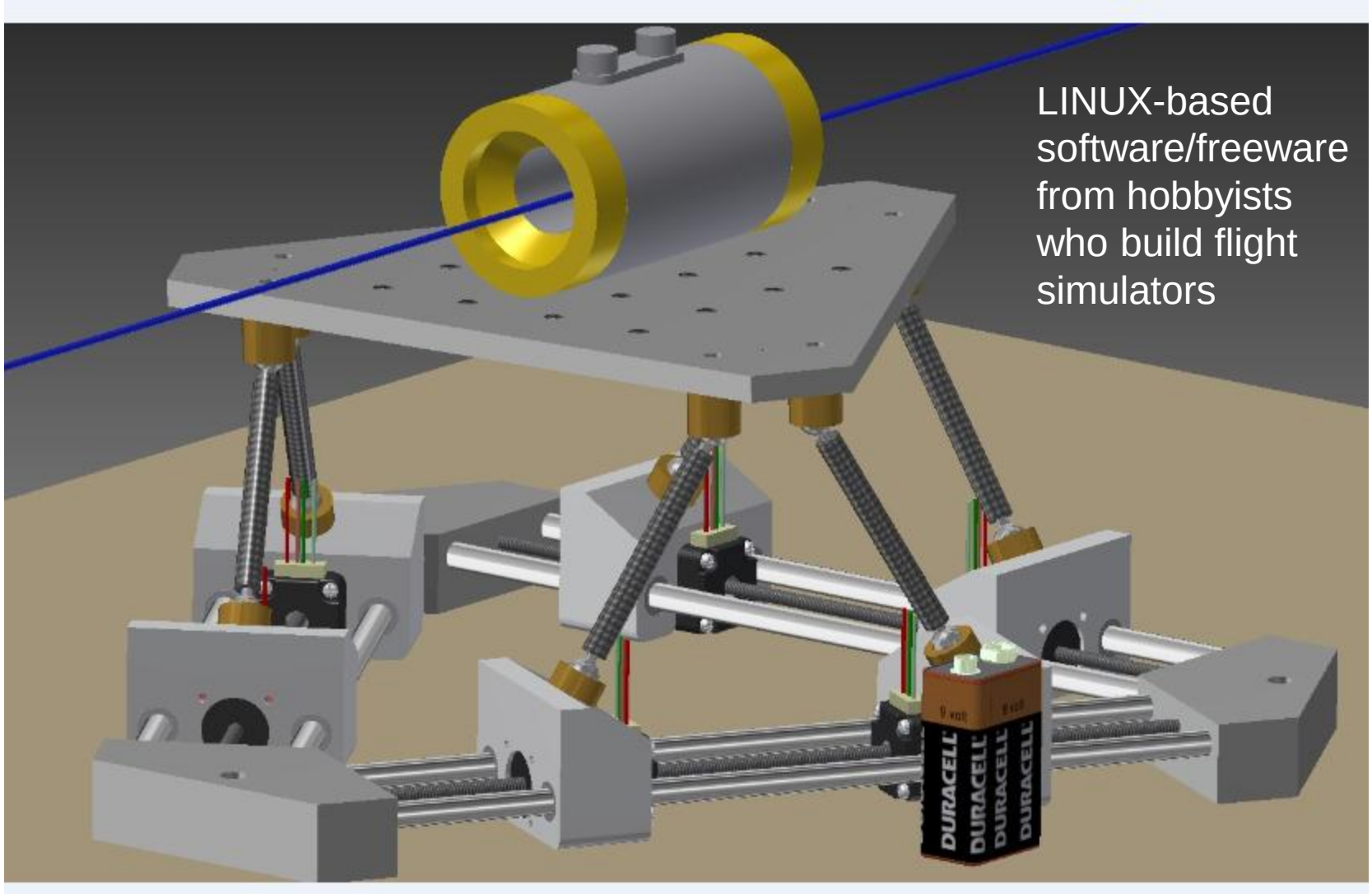

X, Y, pitch, roll and yaw

Initial attempts and problems encountered

Two commercial high-speed / high-voltage transistor (~$8000)

This approach needed big capacitors…. lots of current

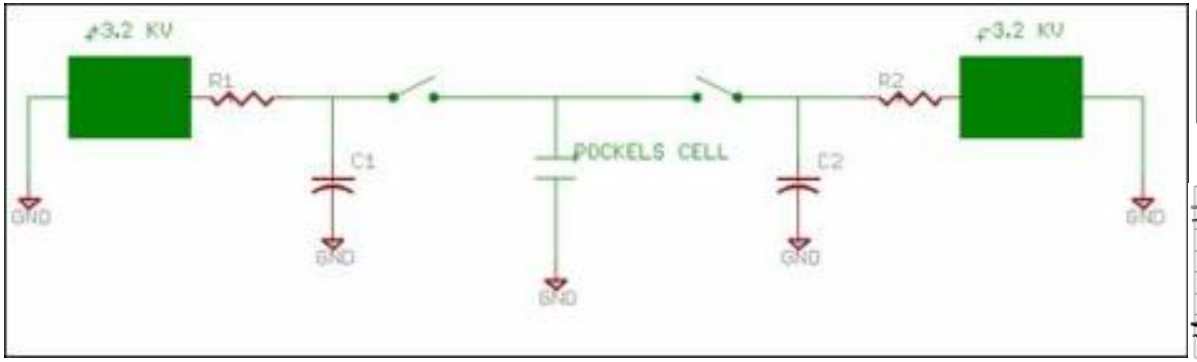

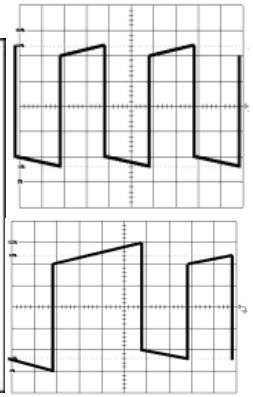

Exaggeration of voltage droop on cell and subsequent re-charge after a helicity flip. Droop causes a serious problem when helicity flip rate was changed from a toggle to a pseudo-random pattern: pockels cell "memory"

high-voltage switch (~$10,000) All-in-one commercial bipolar

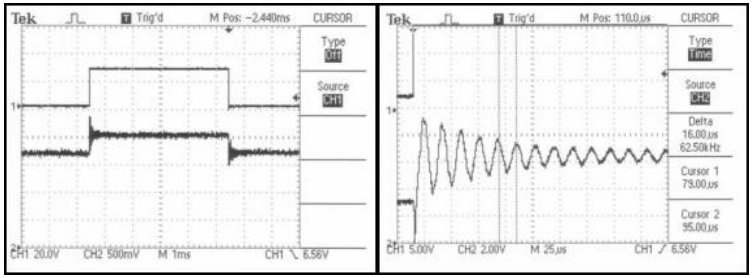

Charge droop was greatly improved, but high speed ringing of the cell was a problem for the settling time. In addition, the large high-speed switching currents created a noise induced helicity pickup on sensitive helicity DAQ components.

Work of John Hansknecht

Solution: Opto-diode

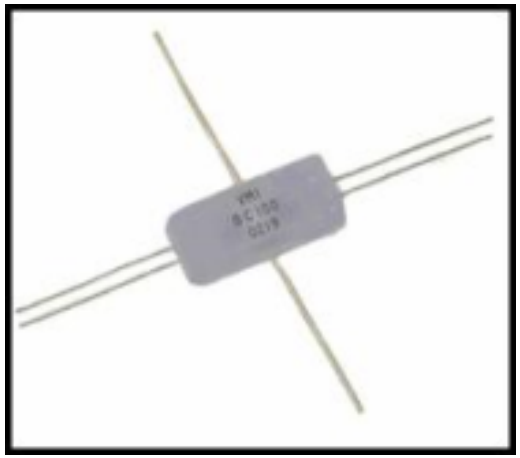

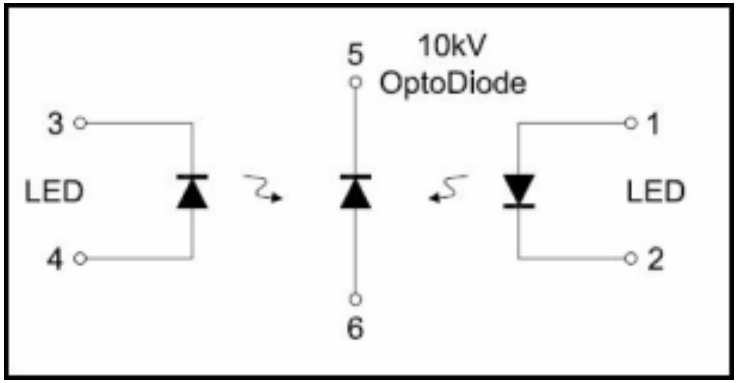

Encapsulated Opto-diode $67 each

- **I = CΔV/ Charge time**
- +/- quarter wave voltage = 5120V
- Cell capacitance = 6pf
- Desired charge time = 100us
- **Calculated current is only 307uA !!**

Work of John Hansknecht

New Opto Diode Pockels Cell Switch

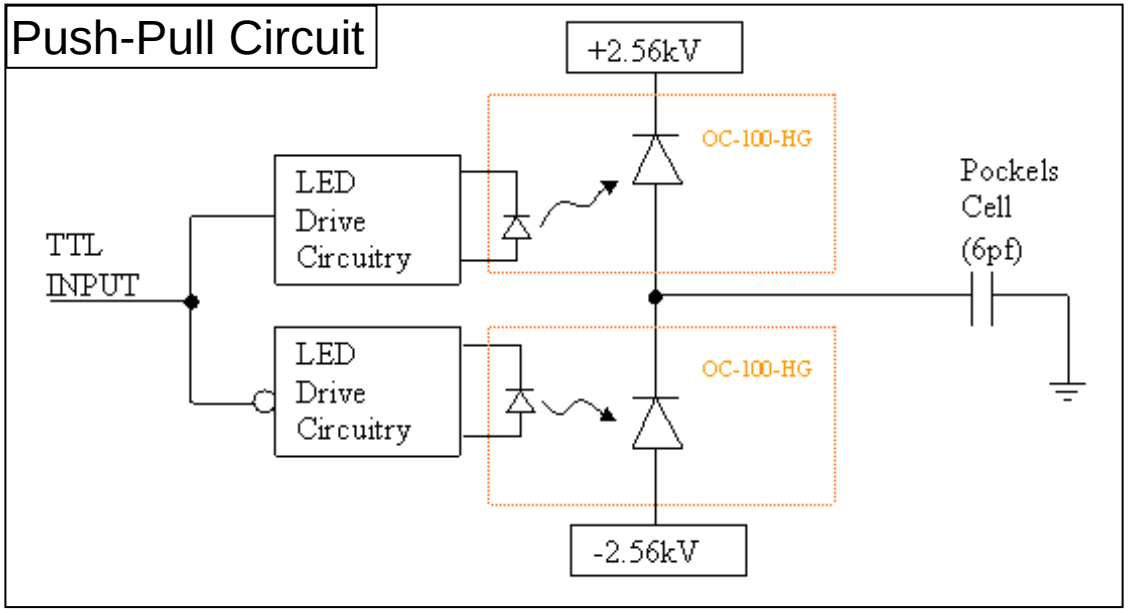

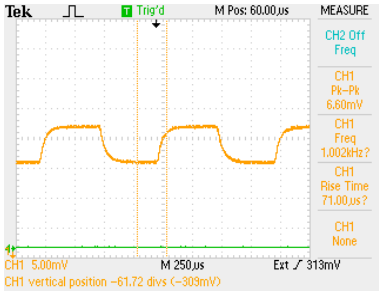

Pockels cell λ/2 flipping at 1kHz. Perfect symmetry and no voltage droop over time.

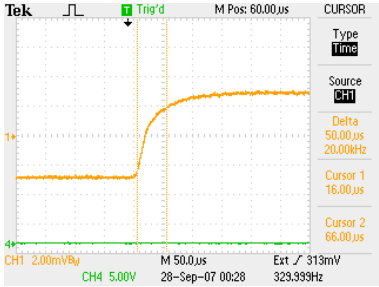

Pockels cell λ/2 transition optical result. ~70us with no ringing.

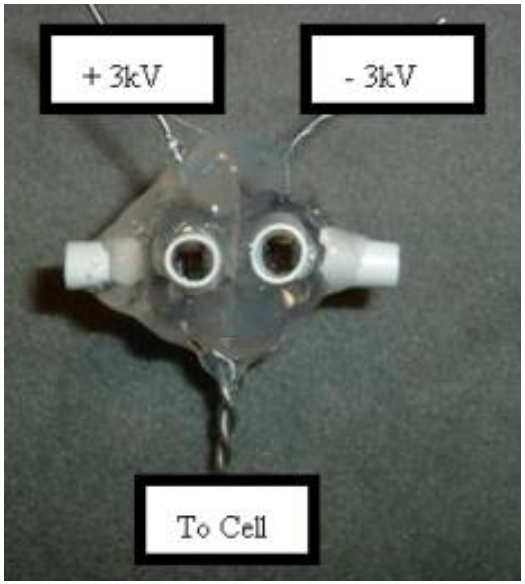

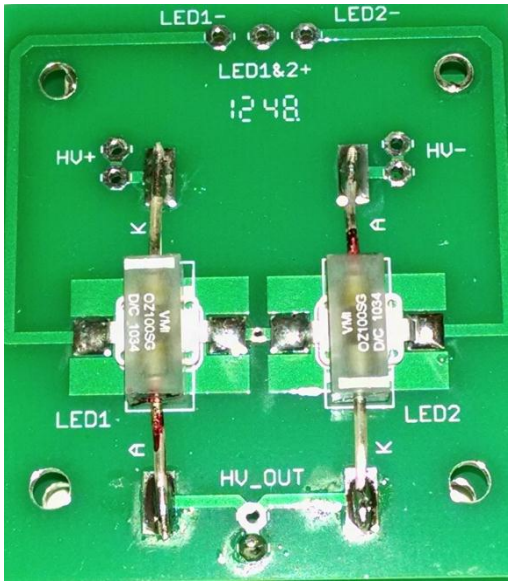

Reversal at 2kHz is possible, but with increased dead time.

Rise time of ~60-70usec appears limited by KD*P.

RTP is option (no piezo effect), but polarization quality suffers

Work of John Hansknecht

Mott Polarimeter at CEBAF

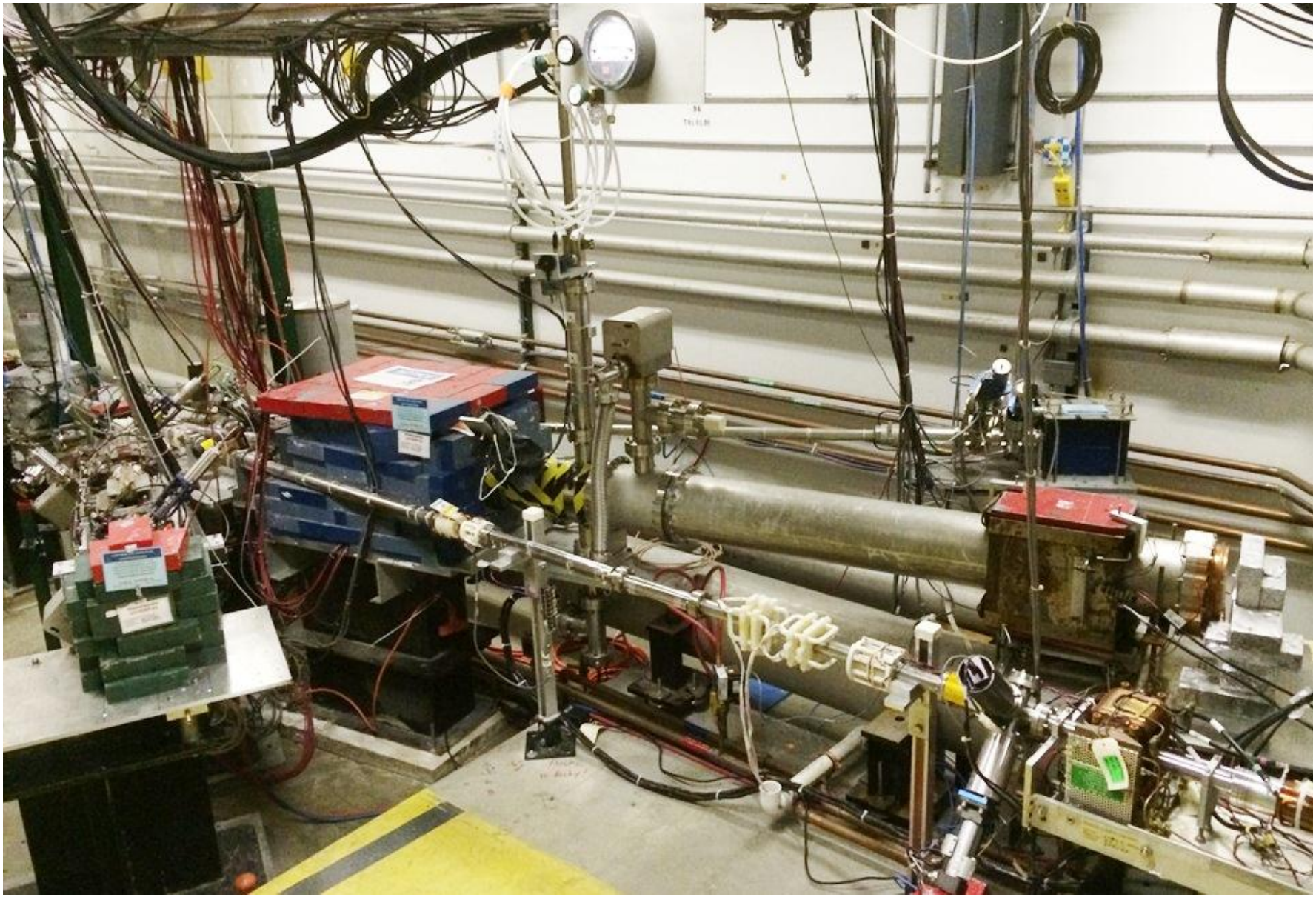

Tests of Mott accuracy in 2015

- M. Steigerwald reported MeV Mott Polarimeter at SPIN 2000, with total accuracy 1.1% dominated by theory (~0.8%)

- Still that accurate? Can we test theory ??? => motivates a new "campaign" to study 5 MeV Mott

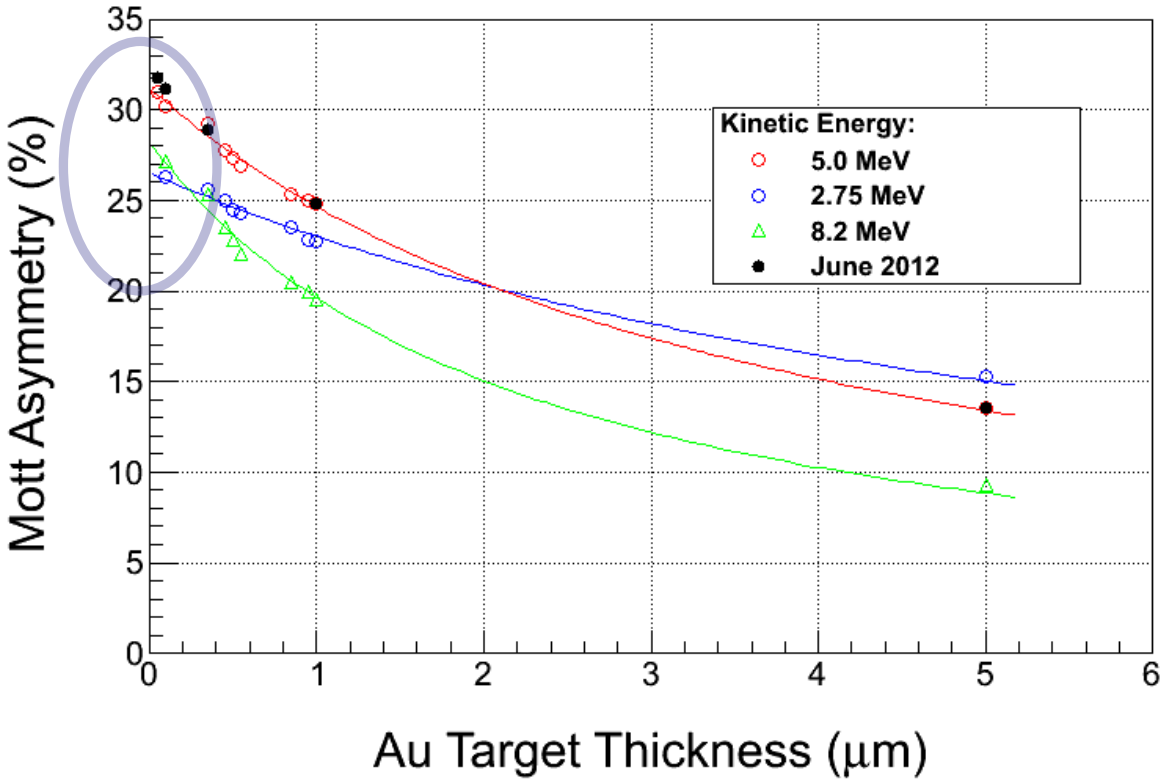

Accurate Mott Polarimetry

List of improvements and tasks:

- Reduce background using time of flight analysis, laser at 31 MHz
- Reduce background using Be dump plate
- Upgrade DAQ to operate at higher data rates, higher beam currents (i.e., measure polarization at your current)
- Exhaustive studies of systematic errors
- GEANT modeling and assistance from theorists to help pin down the Sherman function at zero foil thickness
- Different Zs, different energies
- Two run periods planned: Jan 2015 and Summer 2015

Gay, Grames, Horowitz, Mamun, McHugh, Opper, Poelker, Roca-Maza, Sinclair, Stutzman, Suleiman

Role of Beam Dump Background

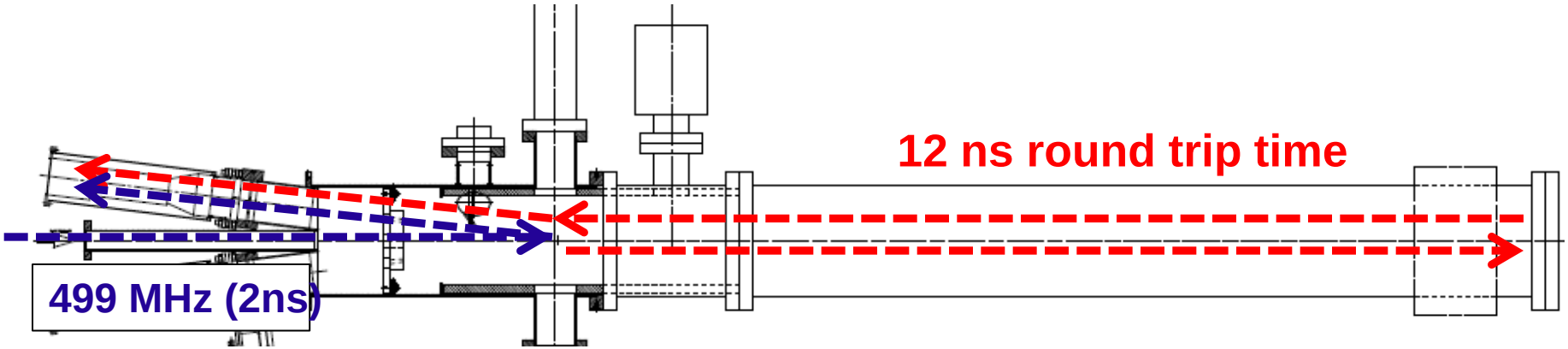

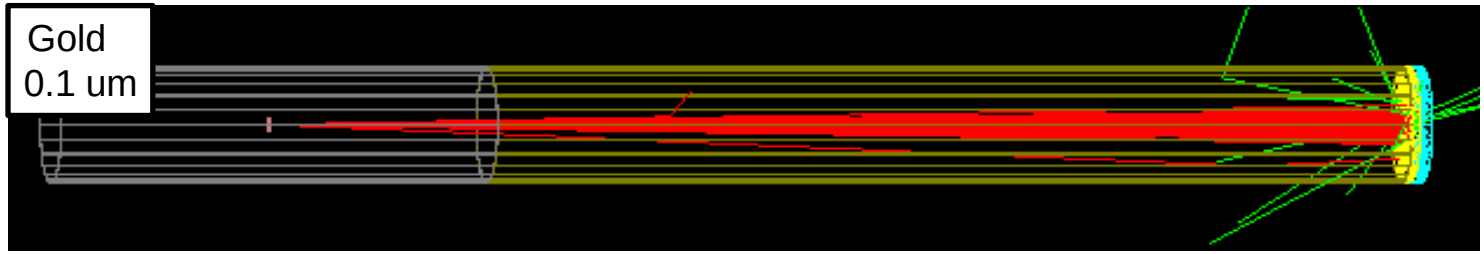

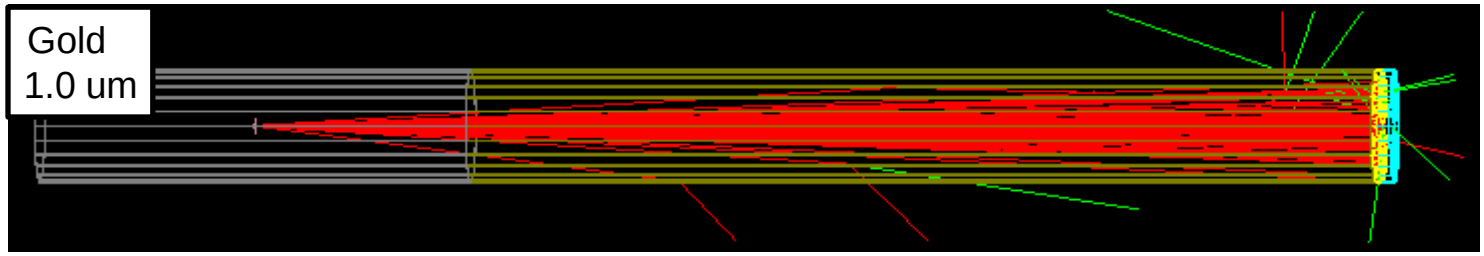

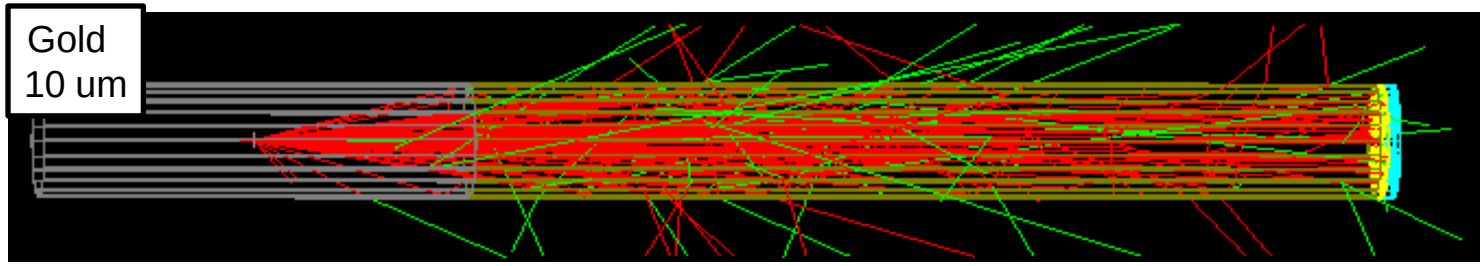

M. McHugh
Joe Grames
Riad Suleiman

Time Of Flight Separation

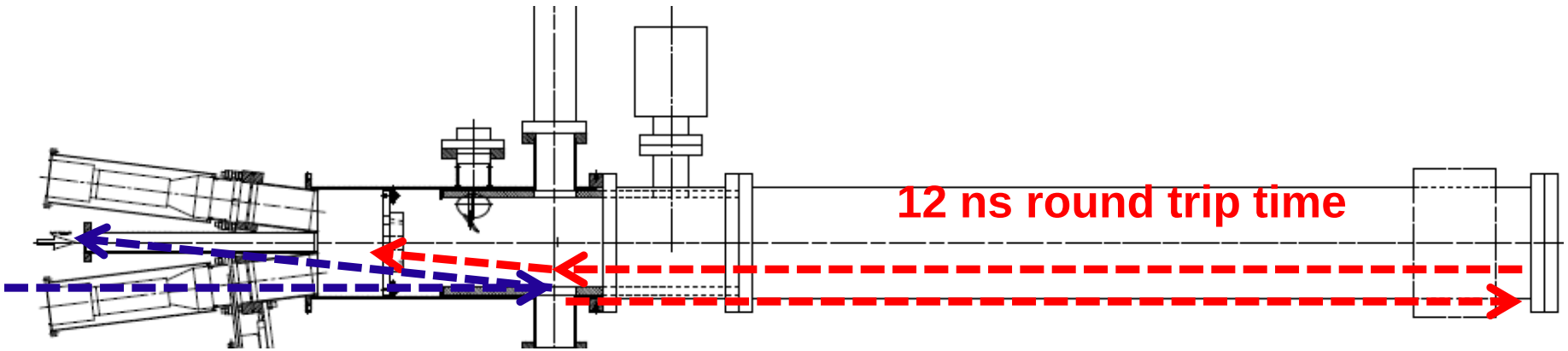

f_{beam} = 31.1875 MHz ⇔ 16 ns repetition rate > 12 ns “clearing time”

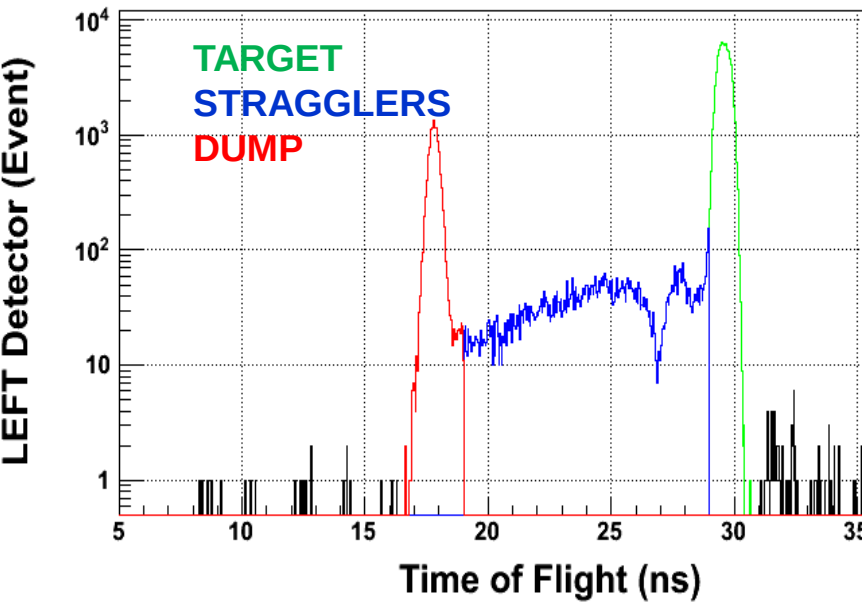

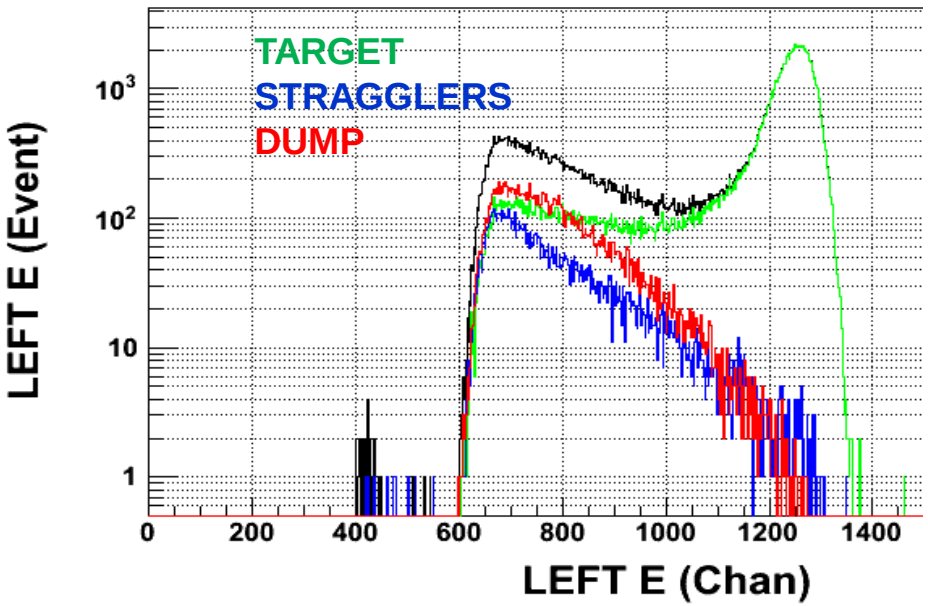

Be Dump Design

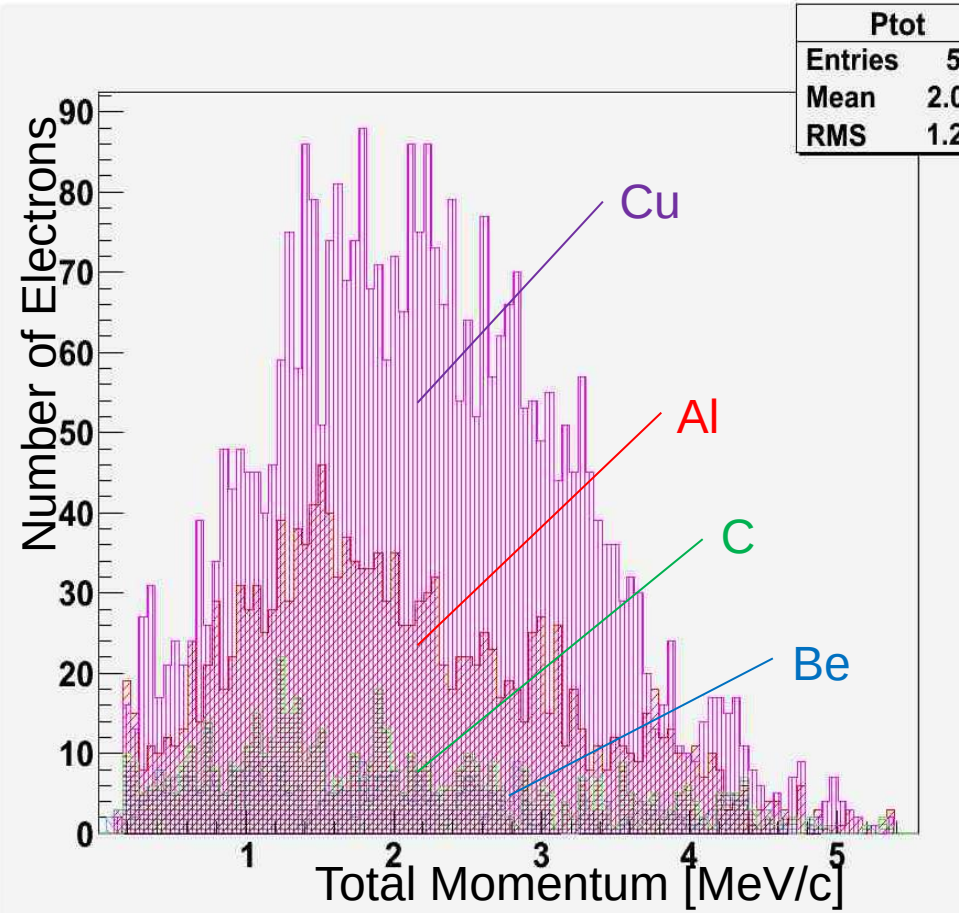

Kalrez™ high temp (240C) o-ring

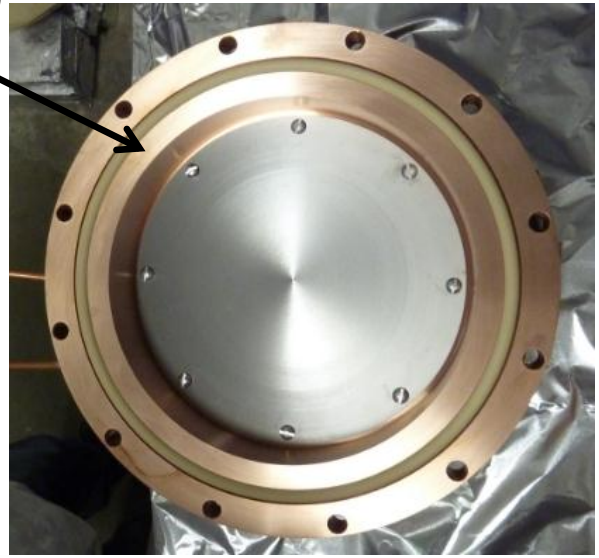

Dump should work fine to 1 kW (200uA @ 5MeV) so limitation will be deadtime.

M. McHugh, Joe Grames, Riad Suleiman

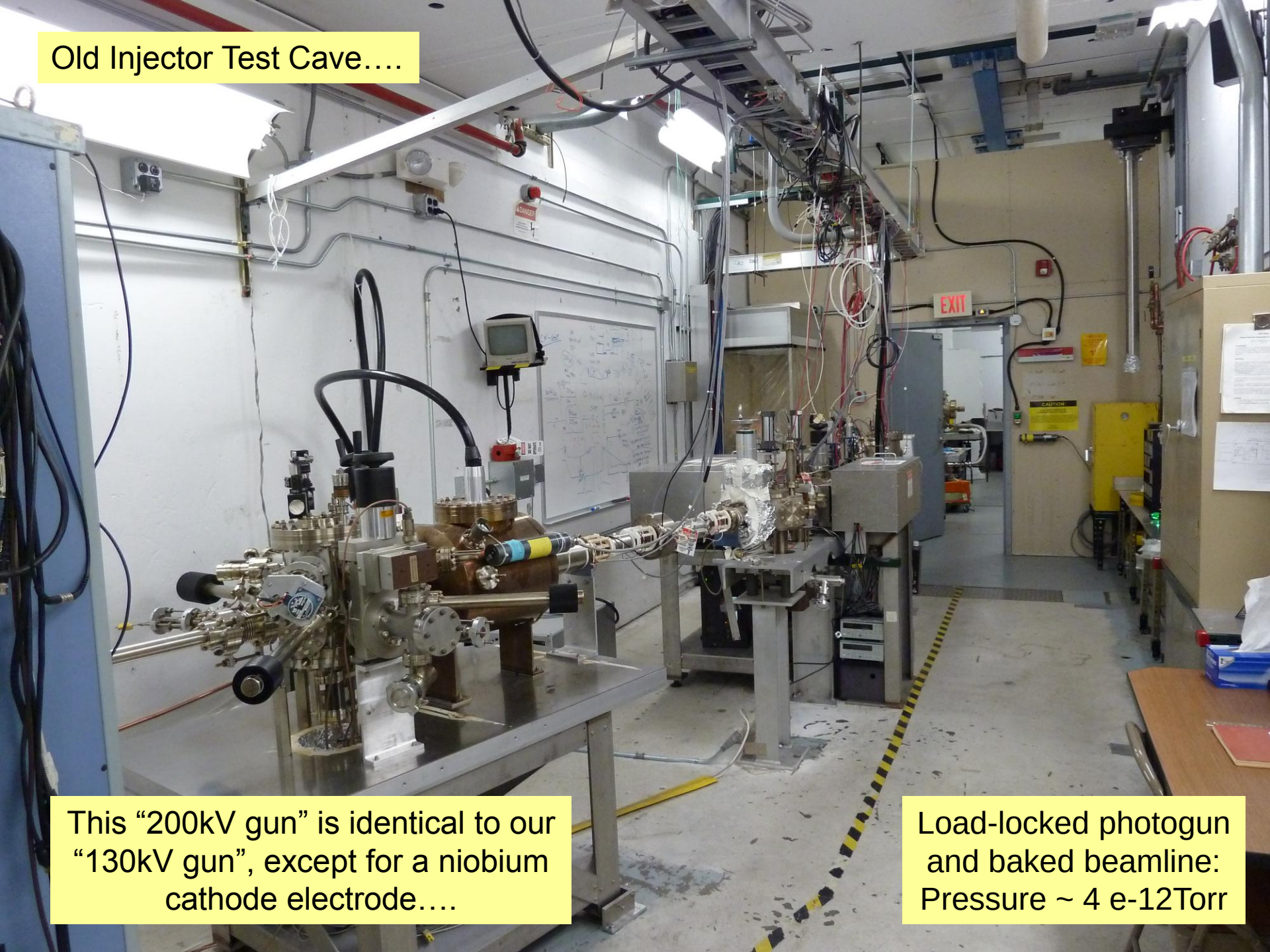
Old Injector Test Cave….
EXIT
This “200kV gun” is identical to our “130kV gun”, except for a niobium cathode electrode….
Load-locked photogun and baked beamline: Pressure ~ 4 e-12Torr

New Injector Test Cave

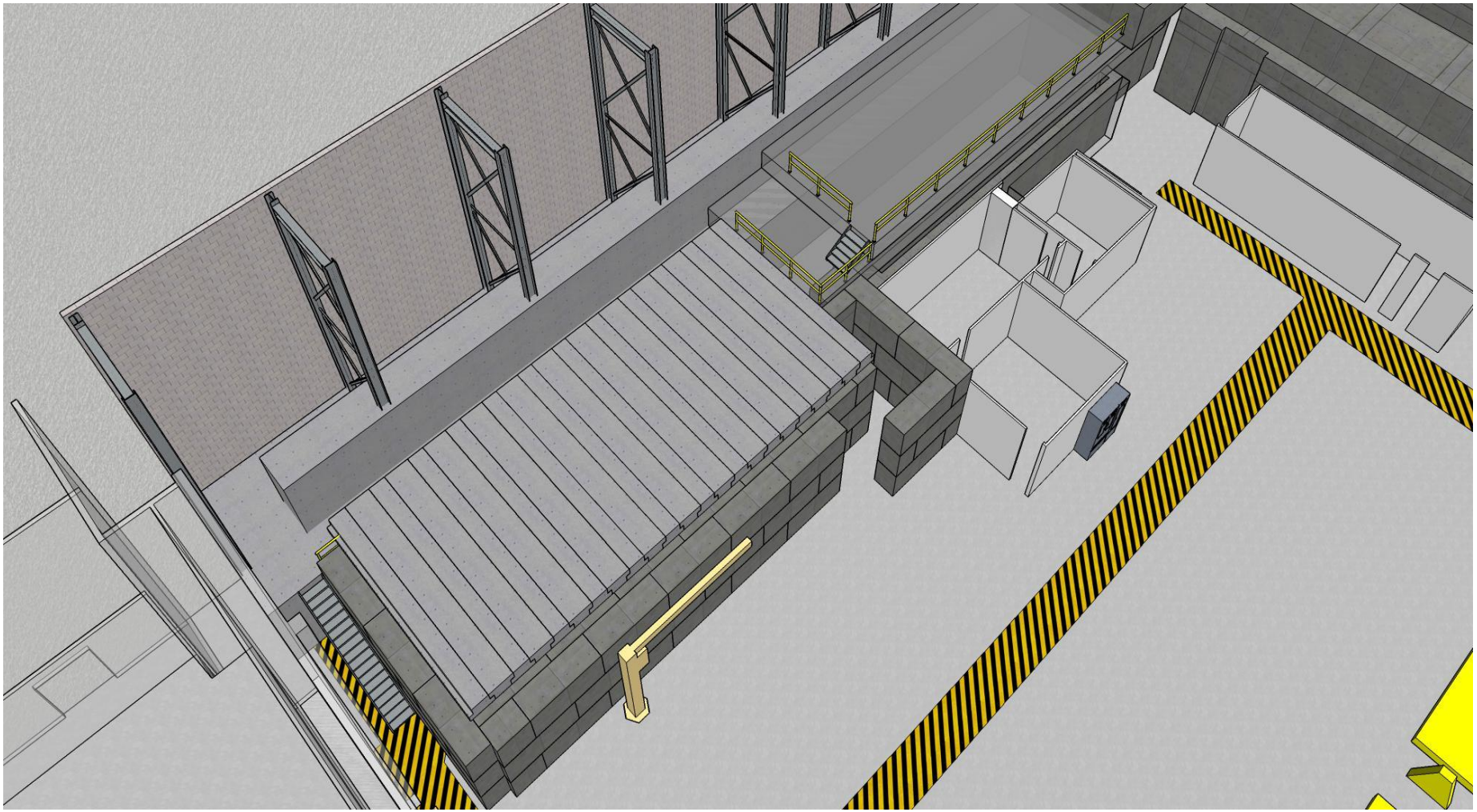

Might be a good place to develop PV-related upgrades

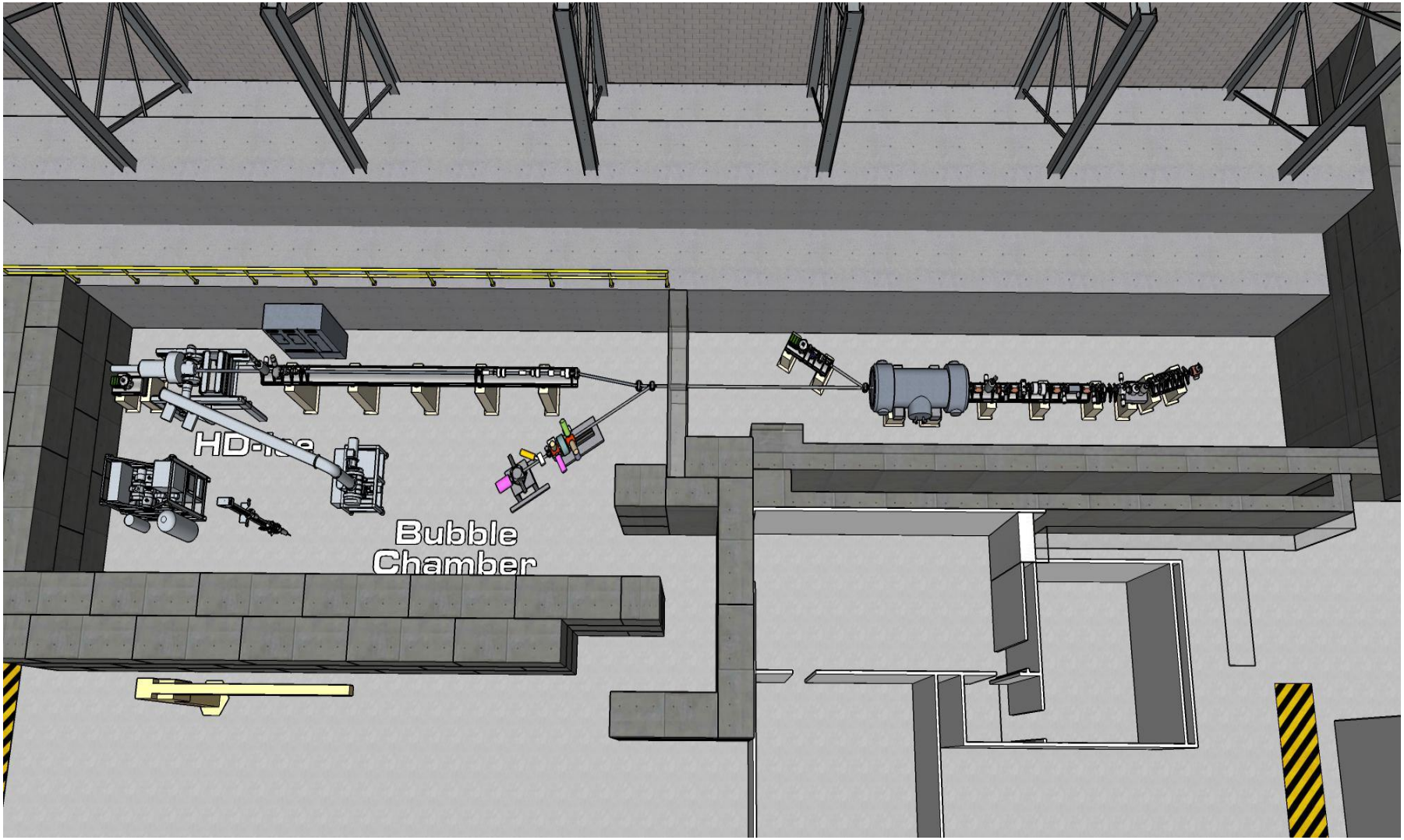

350kV Inverted Gun

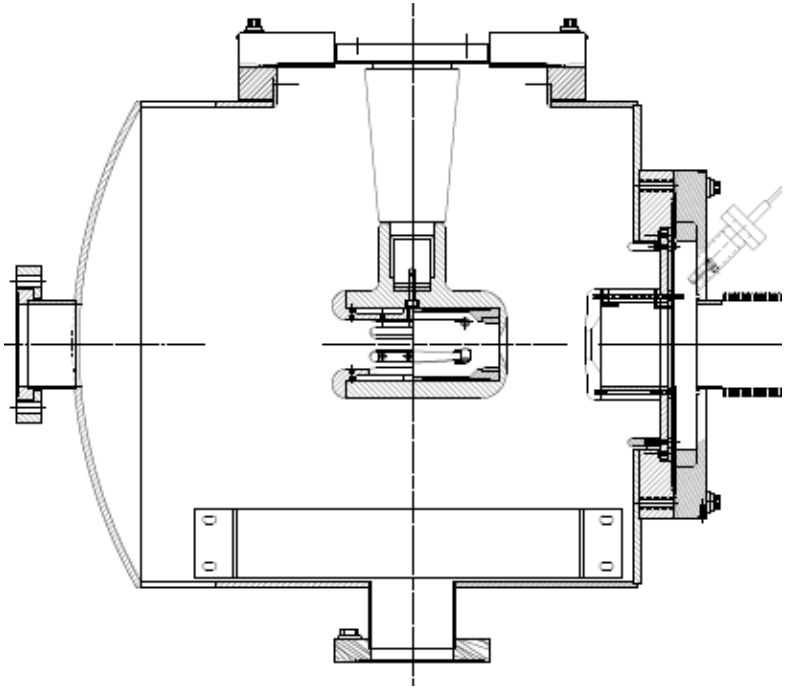

200kV Inverted Gun

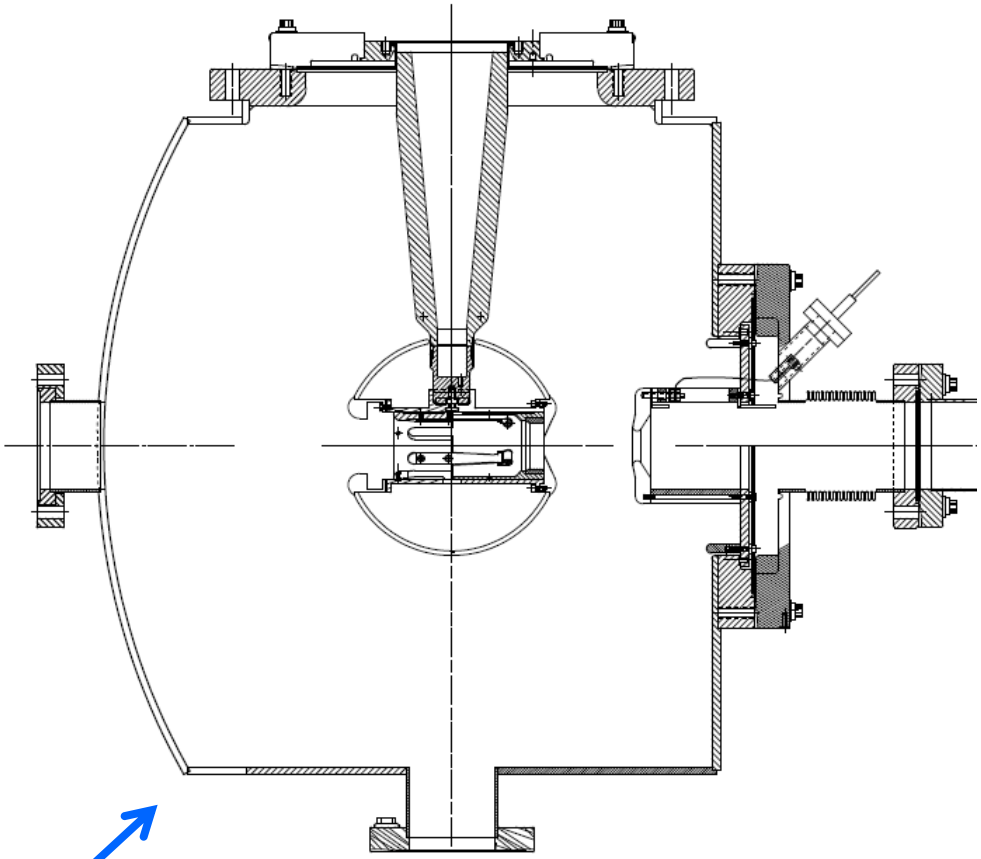

- Longer insulator
- Spherical electrode
- Thin NEG sheet to move ground plane further away

What's in a name? We will likely use our "350kV gun" for injector upgrade, plenty of voltage headroom means less likely to fail at 200kV…..

PRex To–Do List

Must

- Install Stewart Platform for remote optimization of PC using e- beam
- Prepare for beam matching to maximize damping
- Test of Mott polarimeter absolute precision and systematics

Should

- Optimize 2-Wien spin flipper optics, characterize limitations
- Improve diagnostics to measure/compare “dc” vs. HC beam quality
- Complete the upgrade of the helicity magnets controls

Like

- Augment helicity steering dipoles with helicity size quads
- Model E-field to maximize PC uniformity, buy a properly engineered pockel cell, one with the correct cell-diameter-to-laser-beam-diameter aspect ratio, with thoughtfully engineered electrodes to provide the most uniform electric field across laser beam profile

MOLLER to do list

- Upgrade the injector, 200kV gun, new ¼ cryomodule
- 2 kHz Pockels cell switch, stable voltage and minimum transition time between helicity states
- Improve 2-Wien Spin Flipper optics, one that can accommodate feedback to keep transverse polarization minimized….
- Consider liquid crystal modulator array to control polarization over laser profile?
- Helicity correlated beam size monitor?

Parity Beam Kick Off Meeting

partial notes from Kent and some of my edits, from our Dec 17 meeting at JLab

- Propose to meet every couple of months, to benefit PRex and MOLLER
  - Arne, Matt, Joe, Yves, Jay, Reza, Alicia, KK, Kent, Paul, Dave Armstrong, others welcome
- We discussed the change in Moller proposal to lower beam current and higher polarization: now 60uA / 90%
- Issues raised regarding running at high energy
  - Depolarization at higher passes?
  - Energy-stability -> precession to the Hall? How large an effect might this be?
  - synchrotron radiation – added noise and beam width/clipping might be spin-state dependent?
  - Feedback to minimize transverse polarization
- Issues regarding injector
  - 2kHz flip rates not yet demonstrated
  - 4-hall operation and/or multiple A/B/C 5th pass requires 249.5 MHz bunch rep rate, and 2x charge density. Approaches Qweak levels at injector
  - New injector expected by 2019: 200 keV Gun, new 1/4 Cryo, new Wiens and different configuration, expect the prebuncher to be superfluous
  - More complete tests to learn limitations of present 2-wien system will be performed soon
  - Matching and optics: "phase trombone" is setup in Hall A line for 12 GeV (might also be possible for PREX)
  - Polarization and Polarimetry issues: Spin dance? Feedback on Horizontal Wien? Complete remote control of pockel cell alignment