REVISION HISTORY				
ZONE	REV	DESCRIPTION	DATE	APPROVED

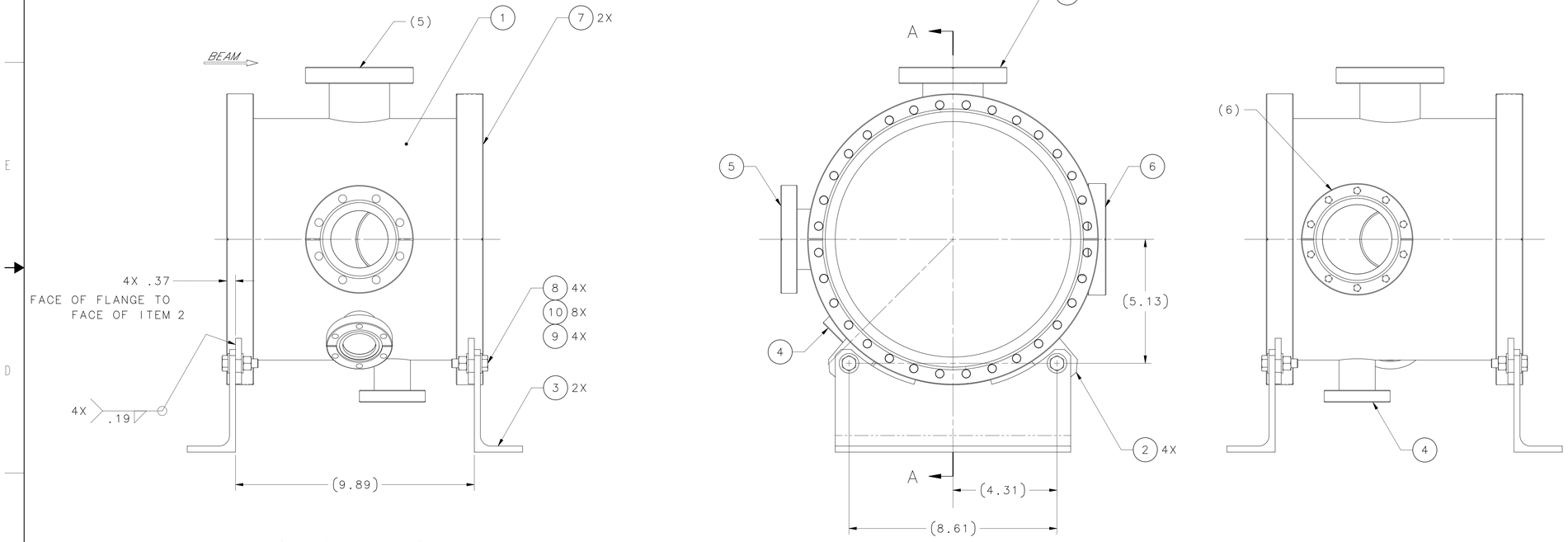

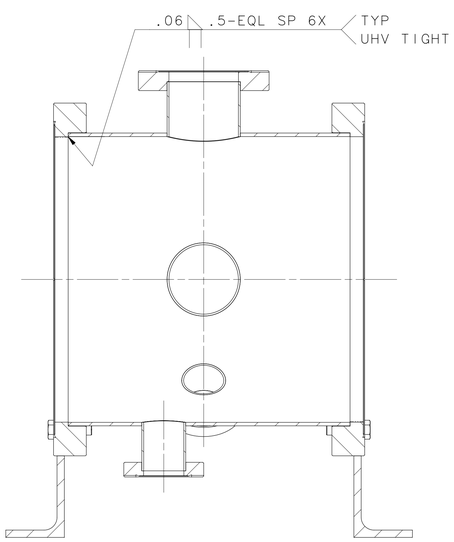

SECTION A-A

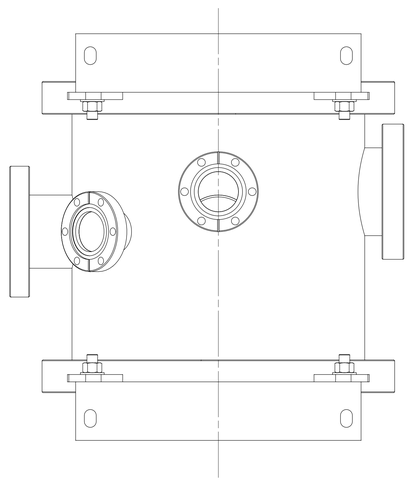

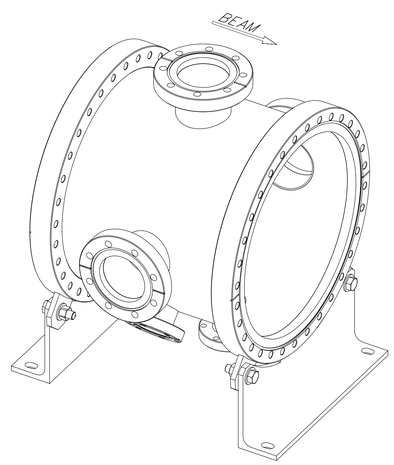

ISOMETRIC VIEW

NOTES:

1. USE THE FOLLOWING CEBAF SPECIFICATIONS:
   #22631-S-001 FABRICATION OF UHV EQUIPMENT.
   #22632-S-001 CLEANING AND HANDLING OF UHV COMPONENTS.
   #22633-S-001 WELDING SPECIFICATION FOR UHV COMPONENTS.
   #22634-S-001 HELIUM LEAK TEST PROCEDURE FOR UHV COMPONENTS.

2. PROTECT ALL FLANGE FACES DURING AND AFTER PROCESSING WITH SUITABLE PLASTIC CAPS. DAMAGE TO KNIFE EDGE IS UNACCEPTABLE.

QTY REQD	ITEM NO.	PART OR IDENTIFYING NO.	NOMENCLATURE OR DESCRIPTION	MATERIAL SPECIFICATION	NOTES
8	10	-	WASHER, 3/8 NOM 13/32 ID X 13/16 OD	STAINLESS STEEL TYPE 18-8	-
4	9	-	HEX NUT 3/8-16 UNC	SILICON BRONZE	-
4	8	-	HEX CAP SCREW 3/8-16 UNC X 1-1/4 LG	STAINLESS STEEL TYPE 18-8	-
2	7	-	CF FLANGE 12 OD X 10 ID, NR	STAINLESS STEEL TYPE 304	-
1	6	-	CF FLANGE 4-5/8 OD X 3 ID, NR, TAPPED	STAINLESS STEEL TYPE 304	-
2	5	-	CF FLANGE 4-1/2 OD X 2-1/2 ID, NR	STAINLESS STEEL TYPE 304	-
2	4	-	CF FLANGE 2-3/4 OD X 1-1/2 ID, NR	STAINLESS STEEL TYPE 304	-
2	3	VAC5550124-1023	CHOPPER CHAMBER MOUNT ANGLE	-	-
4	2	VAC5550124-1022	CHOPPER CHAMBER TAB	STAINLESS STEEL TYPE 304	-
1	1	VAC5550124-1019	MAIN TUBE WELDMENT	STAINLESS STEEL TYPE 304	-

PARTS LIST

EACH SHEET OF MULTI-SHEET DRAWINGS SHALL ALWAYS HAVE THE SAME REVISION LEVEL.

DIM & TOL PER ASME Y14.5, UNLESS OTHERWISE SPECIFIED DIMENSIONS ARE IN INCHES. TOLERANCES ARE:
FRACTIONS ± N/A; DECIMAL .X ± .1, .XX ± .01, .XXX ± .005; ANGLES ± .50°

THIRD ANGLE PROJECTION

MATERIAL: SEE PARTS LIST

FINISH MACHINED SURFACES 125 UNLESS OTHERWISE NOTED
DEBURR & BREAK ALL SHARP EDGES

DO NOT SCALE DRAWING

DRAWN: J.TSCHIRHART
DATE: 25APR2016

United States Department of Energy
Jefferson Lab — Thomas Jefferson National Accelerator Facility
Newport News Virginia

VAC
TUBES & CHAMBERS
OCHAMBER ASSEMBLIES
OUTER SHELL ASSEMBLY

SIZE: E
DWG. NO.: VAC5550124-1015
REV.: —
SCALE: 1:2
USED ON ASSY NO.: VAC5550123-1069
SHEET 1 OF 1