Goal : evolve the optics and physical layout between from cryo-unit to beam dump

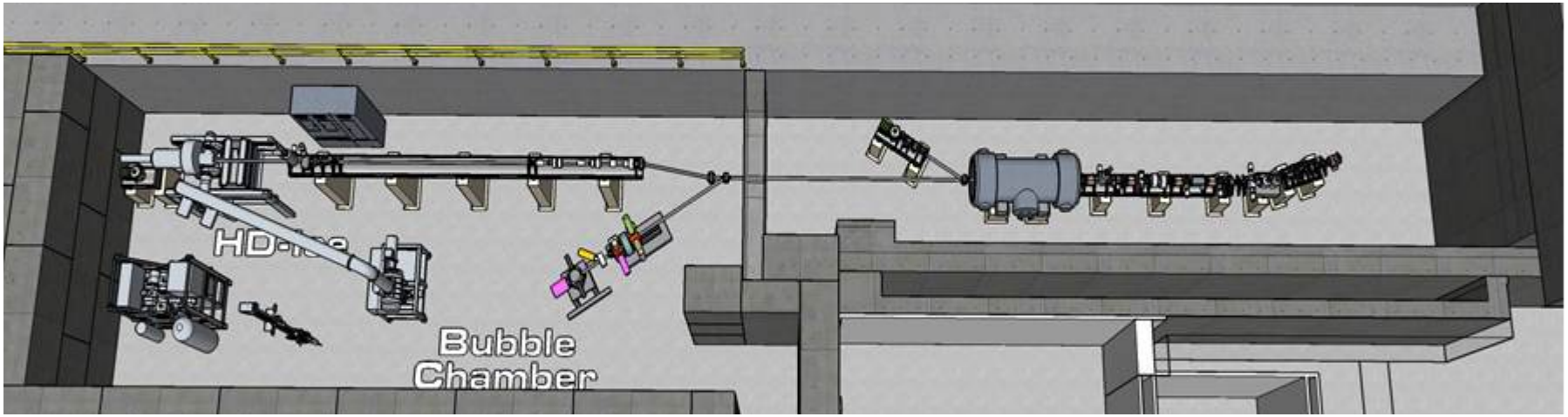

Important considerations:

- Initial beam condition
- Dispersion (if chicane is used)
- Including HDIce segment
- First iteration of optics and beam sizes
- ME integration (walls, hardware, etc)

Initial beam values : correct input assures optics will be matched to incoming beam

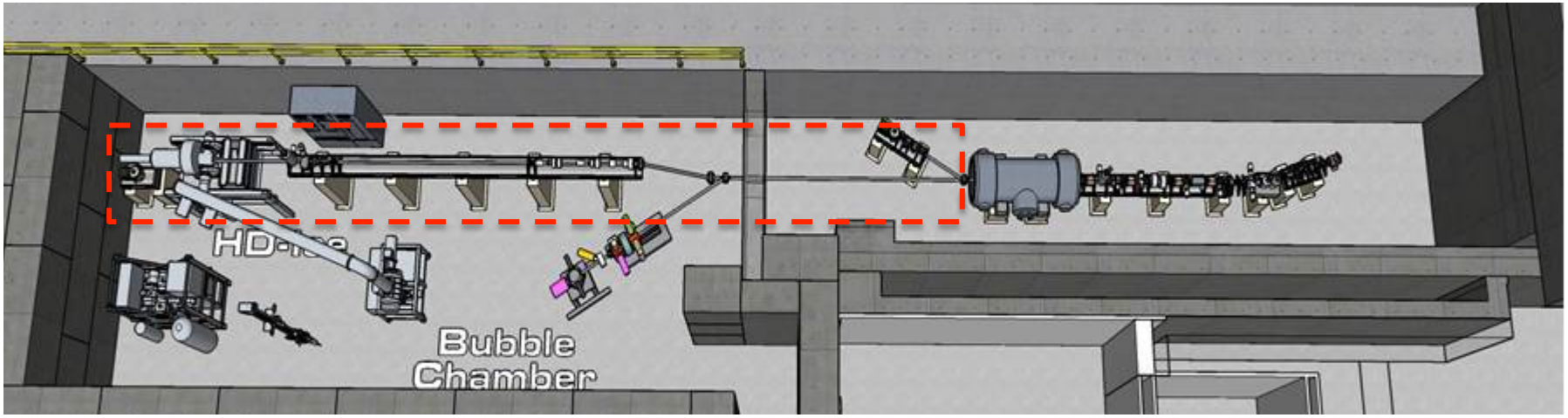

- A start-to-end model is not yet reliable to predict the post-cryounit beam
- While not identical, *measured* CEBAF parameters will be used (at least temporarily)

C. Tennant, J. Grames, R. Suleiman, D. Turner, *Transverse Beam Characterization in the CEBAF 5 MeV Region*, JLAB-TN-14-004

	β_x (m)	α_x	β_y (m)	α_y	ε_{nx} (mm-mrad)	ε_{ny} (mm-mrad)
3.1 MeV/c	22.79	−7.42	10.20	−0.67	0.42	0.16
4.0 MeV/c	22.91	−6.52	19.37	−1.42	0.43	0.18
6.3 MeV/c	9.11	−2.53	30.13	−8.34	0.42	0.30
7.2 MeV/c	8.68	−2.41	35.13	−9.53	0.47	0.33

Dispersion: generated by dipole magnets

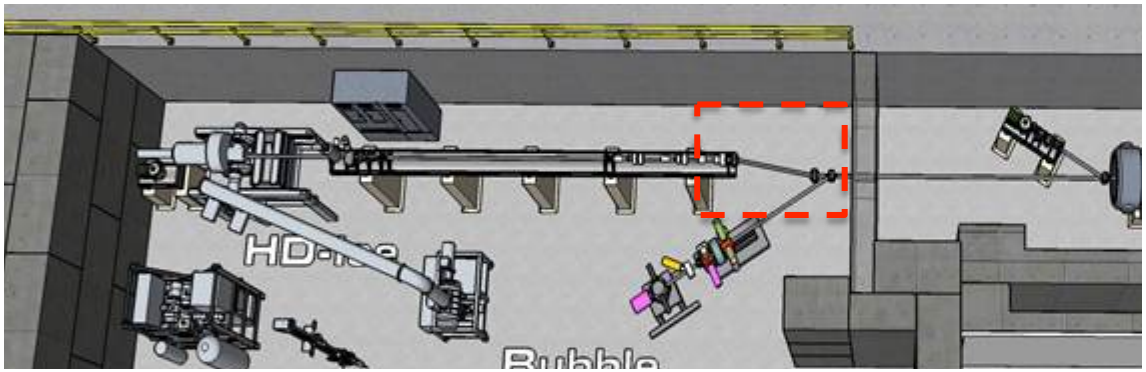

- Any residual dispersion will increase beam size: X = D * dp/p
- Momentum spread dp/p will be "large", possibly as high as 0.5% (e.g. D=0.25m => 12mm)

Good advice from D. Douglas & K. Steffen, High Energy Beam Optics, Vol. XVII

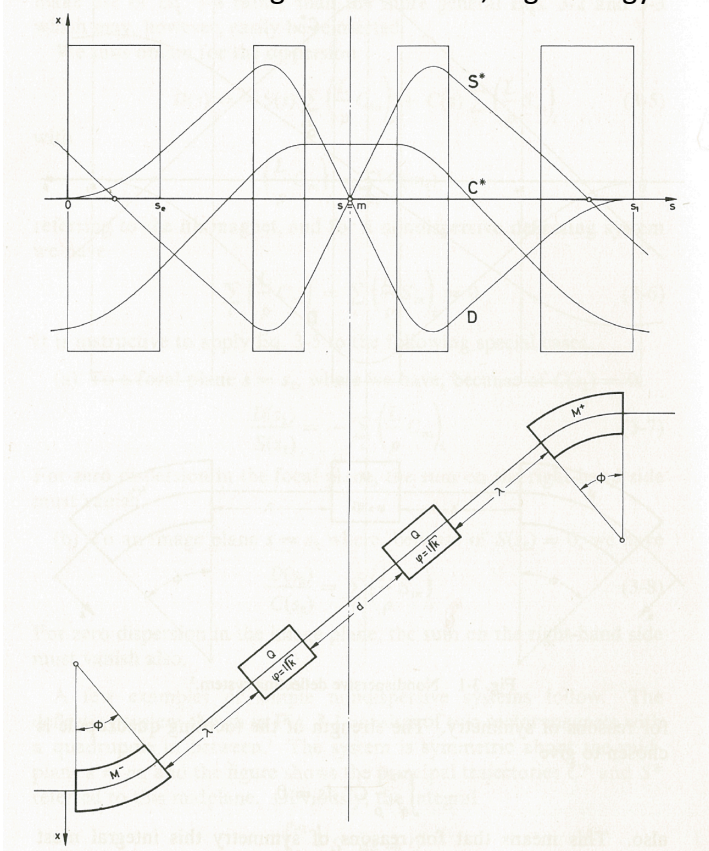

Fig. 3-2 Nondispersive translating system.

Translate : 42" to 85-3/8"
Explore bend : 25 to 30 deg
Line : D – QV – QH – QV – D
Constrain : etay = etayp = 0

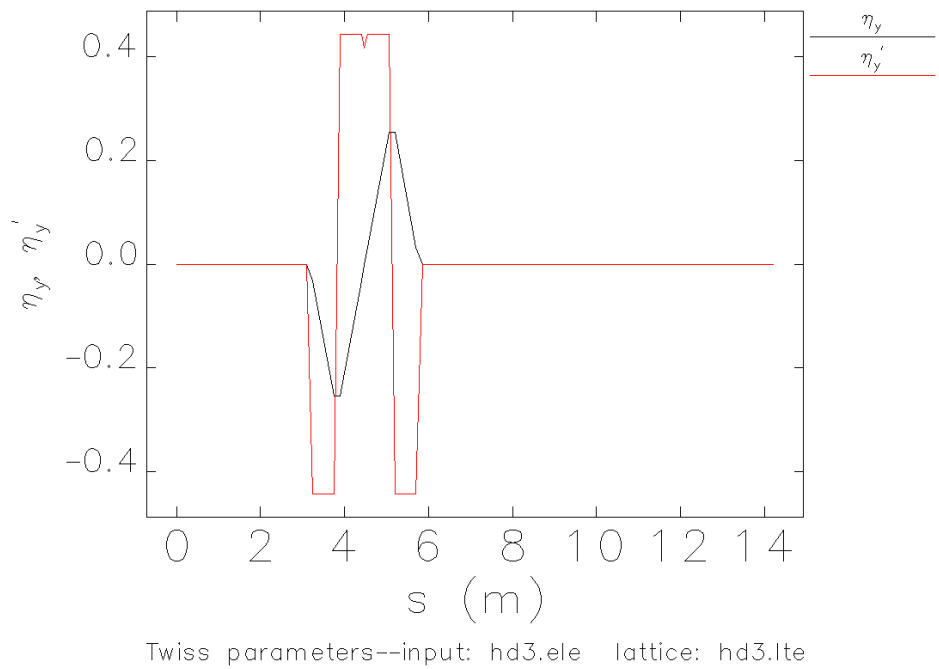

Including HDIce segment : blend Charles' info + beam line components

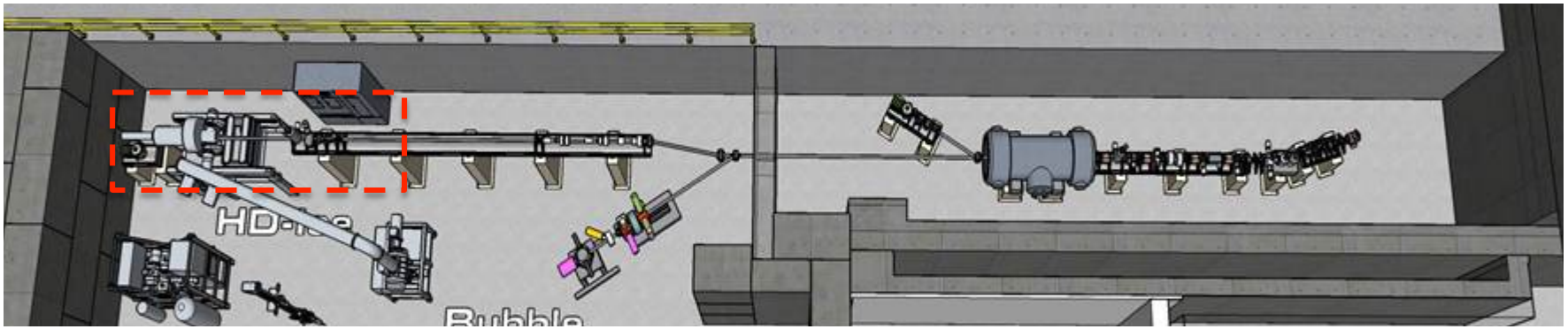

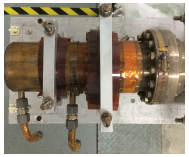

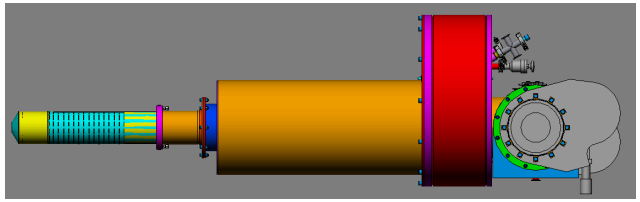

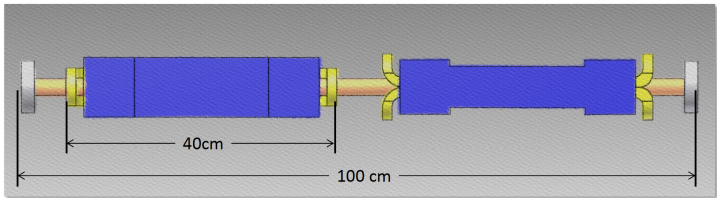

1.0000 m | 0.34085 m | 2.12174 m | 2.87826 m | 1.0000 m

Dump Start | IBC Exit Window | IBC Target Start | IBC entrance | Diagnostic Start | Raster Start

Optical layout : cryo-unit exit to HDIce target

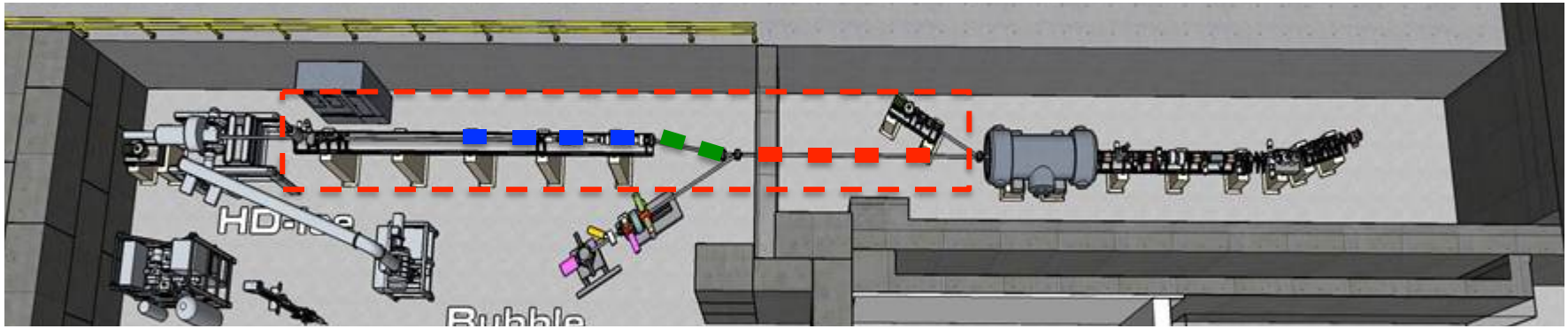

Using a maximum of 11 quads:

- Four quads transform cryo-unit to chicane:
  - waist ($\alpha_x = \alpha_y = 0$)
- Two quads compensate dispersion:
  - No momentum dependence outside of chicane ($\eta_y = \eta_y' = 0$)
- Four quads transform to HDIce target:
  - round beam ($\beta_x = \beta_y = 0.5$ m)
  - waist ($\alpha_x = \alpha_y = 0$)

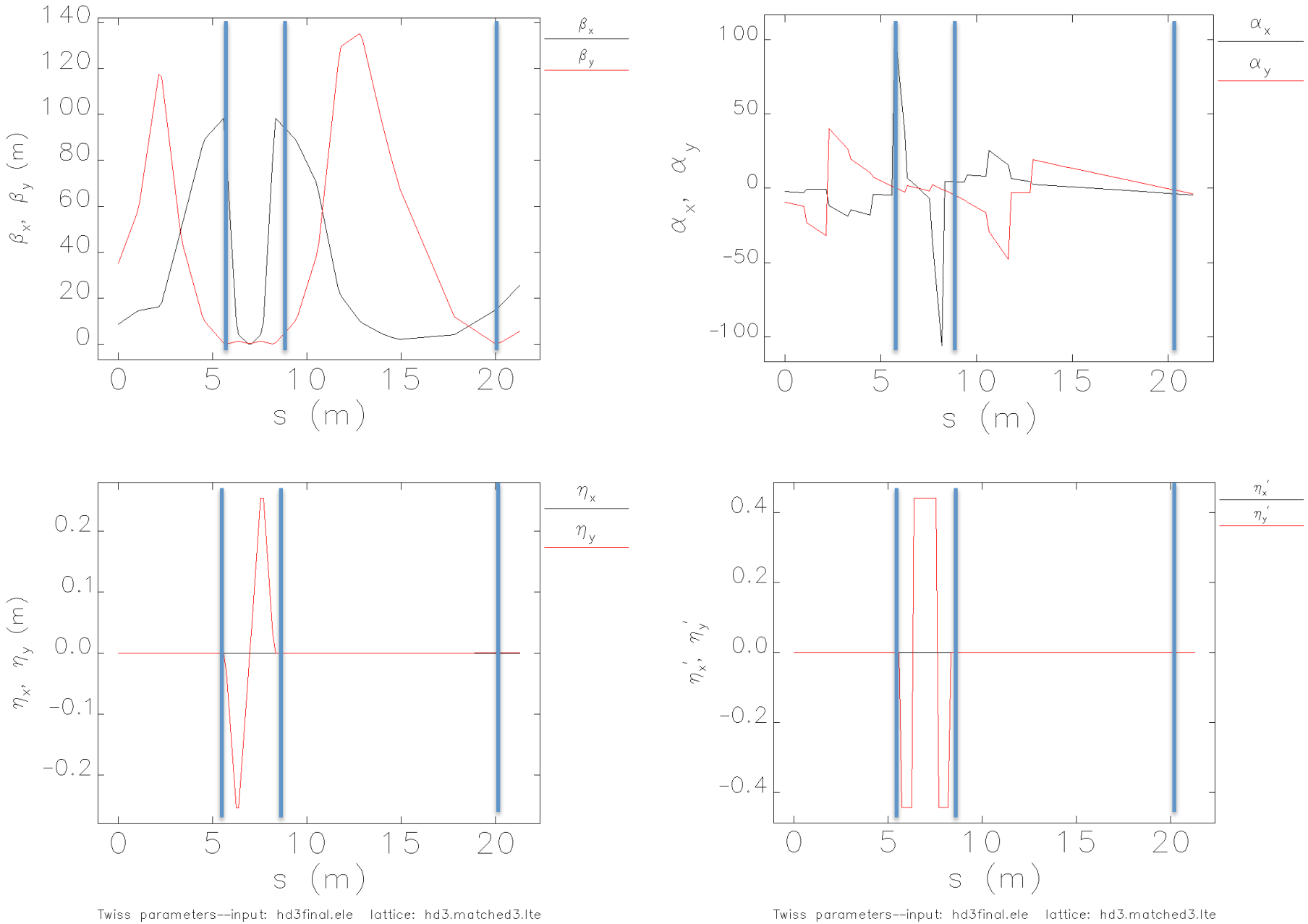

Realized I was fitting to un-equal emittances

RMS beam sizes: 1000 e- tracked

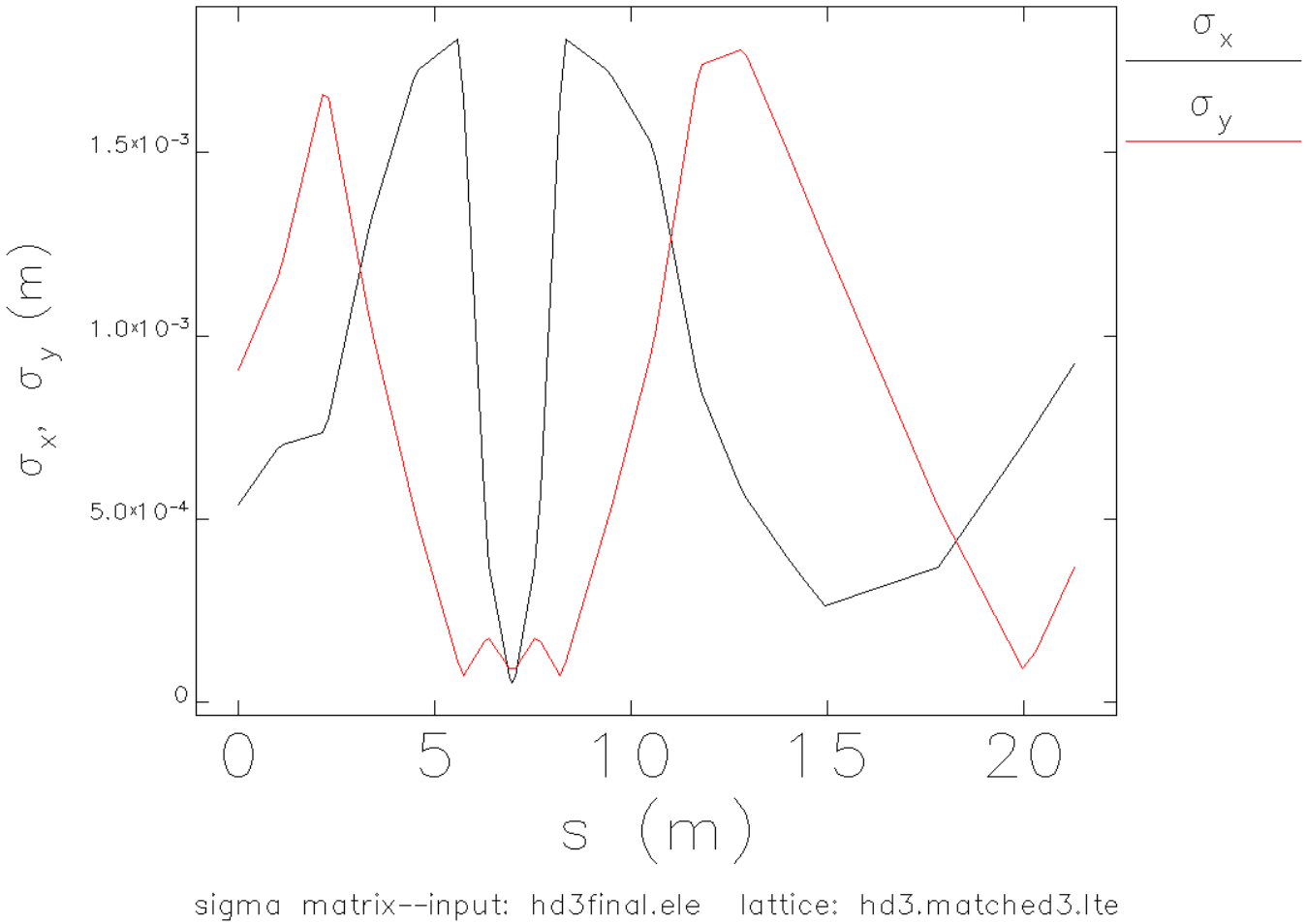

Realized I need to increase dp/p to 5E-3 (was set at 5E-5) !

ME Integration : how to efficiently move between optics and ME models

ElementName	s m	X m	Y m	Z m	theta radians	phi radians
BEG	0.000000e+00	0.000000e+00	1.066800e+00	0.000000e+00	0.000000e+00	0.000000e+00
D1	1.000000e+00	0.000000e+00	1.066800e+00	1.000000e+00	0.000000e+00	0.000000e+00
Q1-C	1.075000e+00	0.000000e+00	1.066800e+00	1.075000e+00	0.000000e+00	0.000000e+00
D2	2.150000e+00	0.000000e+00	1.066800e+00	2.150000e+00	0.000000e+00	0.000000e+00
Q2-C	2.225000e+00	0.000000e+00	1.066800e+00	2.225000e+00	0.000000e+00	0.000000e+00
D2	3.300000e+00	0.000000e+00	1.066800e+00	3.300000e+00	0.000000e+00	0.000000e+00
Q3-C	3.375000e+00	0.000000e+00	1.066800e+00	3.375000e+00	0.000000e+00	0.000000e+00
D2	4.450000e+00	0.000000e+00	1.066800e+00	4.450000e+00	0.000000e+00	0.000000e+00
Q4-C	4.525000e+00	0.000000e+00	1.066800e+00	4.525000e+00	0.000000e+00	0.000000e+00
D1	5.600000e+00	0.000000e+00	1.066800e+00	5.600000e+00	0.000000e+00	0.000000e+00
B1-C	5.675000e+00	3.303089e-12	1.082905e+00	5.672643e+00	4.782065e-11	2.181662e-01
DA	6.251120e+00	5.004351e-11	1.310792e+00	6.199455e+00	9.564130e-11	4.363323e-01
QA-C	6.326120e+00	5.654454e-11	1.342488e+00	6.267428e+00	9.564130e-11	4.363323e-01
DA	6.902240e+00	1.064829e-10	1.585967e+00	6.789570e+00	9.564130e-11	4.363323e-01
QB-C	6.939740e+00	1.097334e-10	1.601815e+00	6.823556e+00	9.564130e-11	4.363323e-01
MKMATCH	6.977240e+00	1.129839e-10	1.617663e+00	6.857543e+00	9.564130e-11	4.363323e-01
QB-C	7.014740e+00	1.162345e-10	1.633511e+00	6.891530e+00	9.564130e-11	4.363323e-01
DA	7.553361e+00	1.629223e-10	1.861142e+00	7.379685e+00	9.564130e-11	4.363323e-01
QA-C	7.628361e+00	1.694233e-10	1.892839e+00	7.447658e+00	9.564130e-11	4.363323e-01
DA	8.204481e+00	2.193617e-10	2.136317e+00	7.969801e+00	9.564130e-11	4.363323e-01
B2-C	8.279481e+00	2.292710e-10	2.152422e+00	8.042443e+00	1.345011e-10	2.181662e-01
D1	9.354481e+00	4.125411e-10	2.168526e+00	9.115086e+00	1.733609e-10	0.000000e+00
QW-C	9.429481e+00	4.255432e-10	2.168526e+00	9.190086e+00	1.733609e-10	0.000000e+00
D2	1.050448e+01	6.119062e-10	2.168526e+00	1.026509e+01	1.733609e-10	0.000000e+00
QX-C	1.057948e+01	6.249082e-10	2.168526e+00	1.034009e+01	1.733609e-10	0.000000e+00
D2	1.165448e+01	8.112712e-10	2.168526e+00	1.141509e+01	1.733609e-10	0.000000e+00
QY-C	1.172948e+01	8.242733e-10	2.168526e+00	1.149009e+01	1.733609e-10	0.000000e+00
D2	1.280448e+01	1.010636e-09	2.168526e+00	1.256509e+01	1.733609e-10	0.000000e+00
QZ-C	1.287948e+01	1.023638e-09	2.168526e+00	1.264009e+01	1.733609e-10	0.000000e+00
D1	1.395448e+01	1.210001e-09	2.168526e+00	1.371509e+01	1.733609e-10	0.000000e+00
RASTERX	1.445448e+01	1.296682e-09	2.168526e+00	1.421509e+01	1.733609e-10	0.000000e+00
RASTERY	1.495448e+01	1.383362e-09	2.168526e+00	1.471509e+01	1.733609e-10	0.000000e+00
HD_DIAG	1.783274e+01	1.882340e-09	2.168526e+00	1.759335e+01	1.733609e-10	0.000000e+00
IBC_START	1.783274e+01	1.882340e-09	2.168526e+00	1.759335e+01	1.733609e-10	0.000000e+00
IBC_D1	1.995448e+01	2.250167e-09	2.168526e+00	1.971509e+01	1.733609e-10	0.000000e+00
MKFINAL	1.995448e+01	2.250167e-09	2.168526e+00	1.971509e+01	1.733609e-10	0.000000e+00
IBC_TARGET	1.995448e+01	2.250167e-09	2.168526e+00	1.971509e+01	1.733609e-10	0.000000e+00
IBC_D2	2.029533e+01	2.309257e-09	2.168526e+00	2.005594e+01	1.733609e-10	0.000000e+00
IBC_EXIT	2.029533e+01	2.309257e-09	2.168526e+00	2.005594e+01	1.733609e-10	0.000000e+00
D2DUMP	2.129533e+01	2.482618e-09	2.168526e+00	2.105594e+01	1.733609e-10	0.000000e+00

Joe's Wizardry: Elegant to ME to S&A

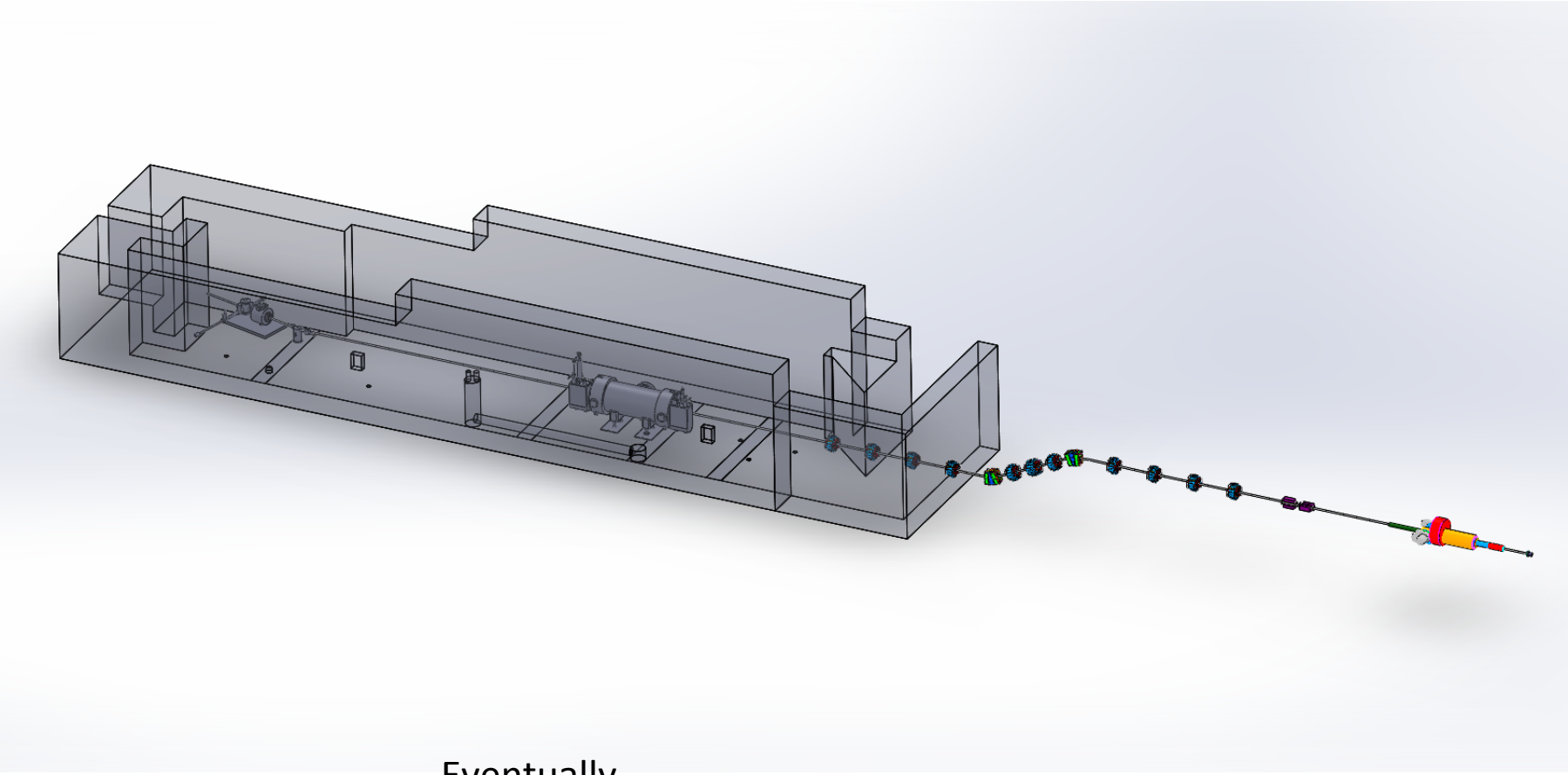

Eventually…

- identify realistic ME elements to use
- define process so translation is "routine"

What's next … ?

- ❑ Correct fitting conditions for asymmetric beam emittance => round & smaller spot
- ❑ Correct momentum spread for beam tracking
- ❑ Model flat beam line (no chicane) for comparison
- ❑ Update Elegant section of gun to cryounit (Wien, buncher, chopper distance)
- ❑ Develop a single S2E Elegant layout with corresponding initial conditions:
  - Yan's 350kV Gun + GPT model
  - Cryounit TN measurements
- ❑ Continue working the plan…

Cave 1

- ~~Compute gun Twiss output from GPT~~
- Add generic hardware layout for better idea of layout and optical strengths needed
- Calculate options for existing Wien and upgrade Wien operating w/ 350keV beam
- Benchmark model of chopping optics with calculation
- ~~Define input conditions to cryounit, i.e. final solution from Gun to Cryounit~~
- Update baseline optics in Elegant, make sure this makes sense
- Fold into GPT for longitudinal study => mechanical lengths (= TOF) important to fold in

Cave 2

- ~~Choose (extrapolate from measurement) reasonable cryounit output Twiss~~
- Optimize optics to reach 50-100 um spot size (do we speak 1-sigma, 4-sigma, 90% ?)
- ~~Fold raster spec into layout~~
- Geant4 model to assess beam from HDIce to dump?
- Define BPM resolution to determine how far from target
- Define minimum "keep out" after HDIce for possible asymmetry detectors
- ~~Fold into Elegant for transverse study~~