GTS gun COMSOL simulations

Pierce geometry angle variation

Gabriel Palacios

gabrielp@jlab.org

05/08/17

Summary

- Solidworks
  - Geometry modifications to the Pierce angle
- COMSOL
  - Details of simulation
  - Plots
- Additional slides

Solidworks geometry modifications:

The original radius is 0.36 and the angle is 25°.
Taken from the desing drawings
https://wiki.jlab.org/ciswiki/images/e/e2/Front_face_electrode.pdf

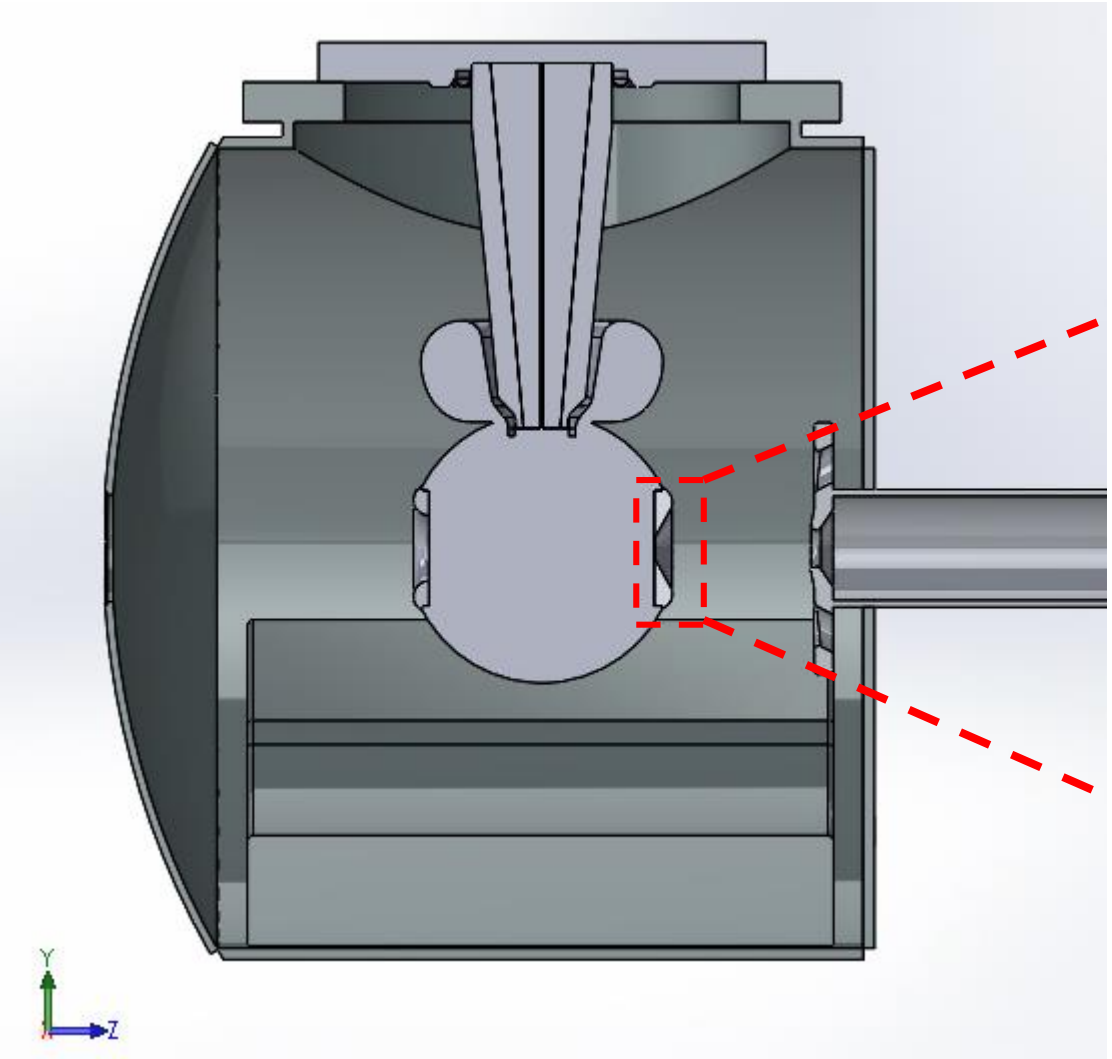

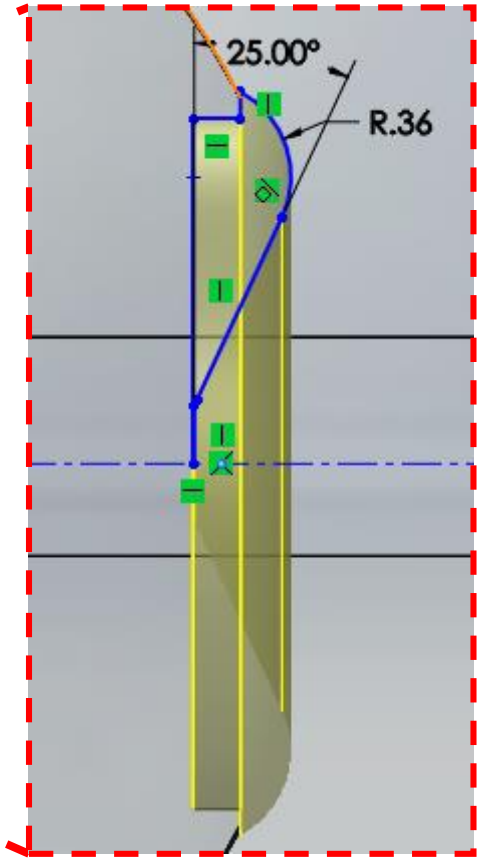

Solidworks geometry modifications:

Modified the Pierce angle keeping the radius constant.

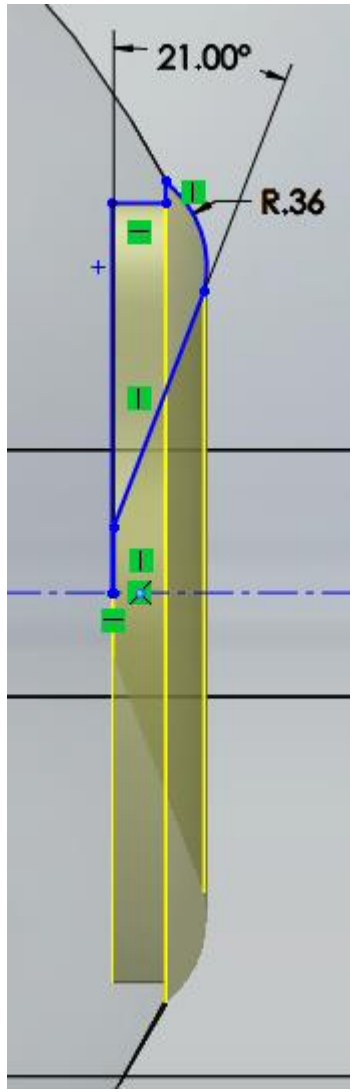

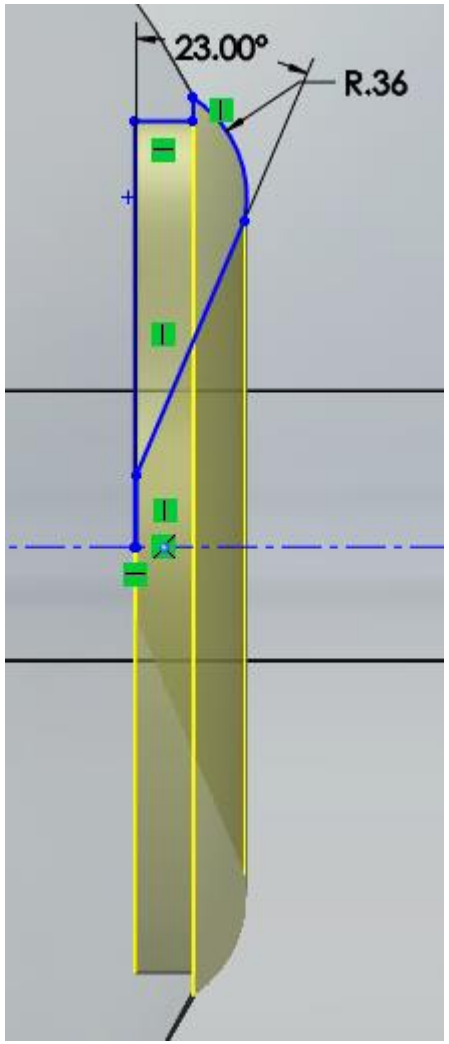

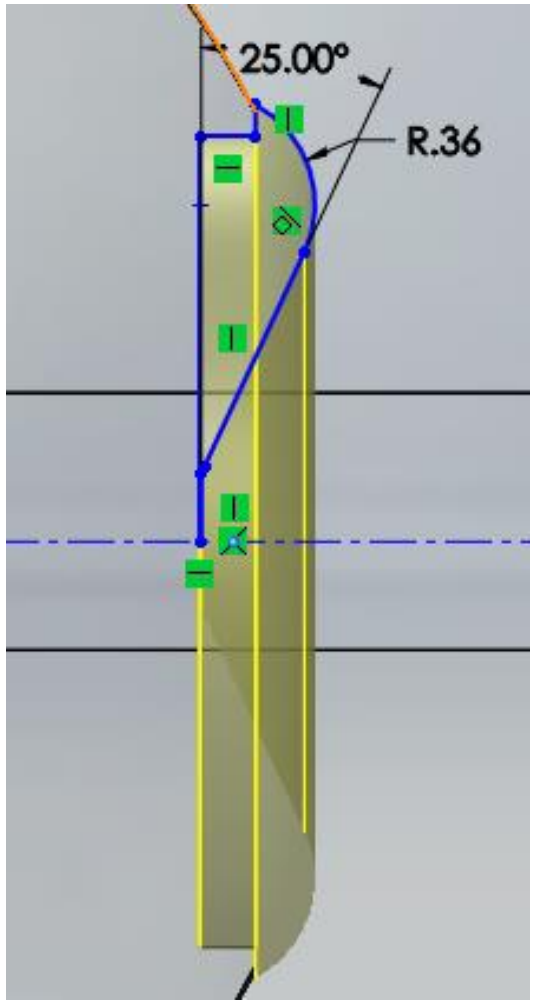

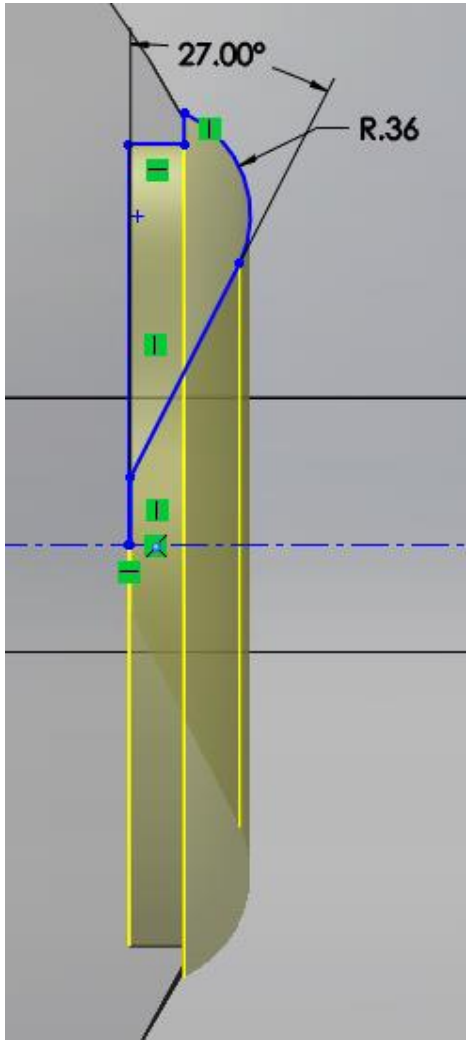

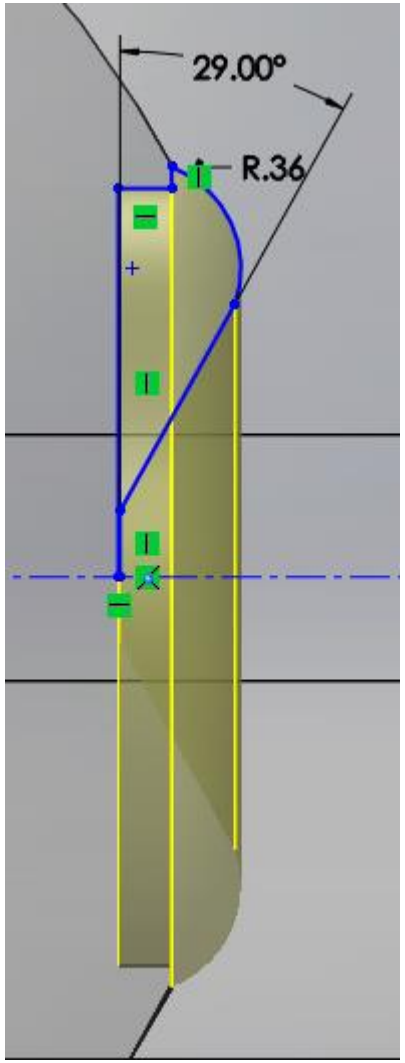

COMSOL materials:

- Stainless steel for all metal components with ε_r=1 and σ of 1.1E6 S/m
- Air for the vacuum surroundings.
- Alumina for the ceramic.
  - ε_r=8.4 and σ of 2E-12 S/m for the black.
- Rubber for the HV cable plug with ε_r=2.37 and σ of 1E-14 S/m .

Used the Physics AC/DC module to implement electrostatics: Grounded the chamber, anode, flanges and V=-300kV to the cathode assembly. The rest of the options are automatically setup by COMSOL.

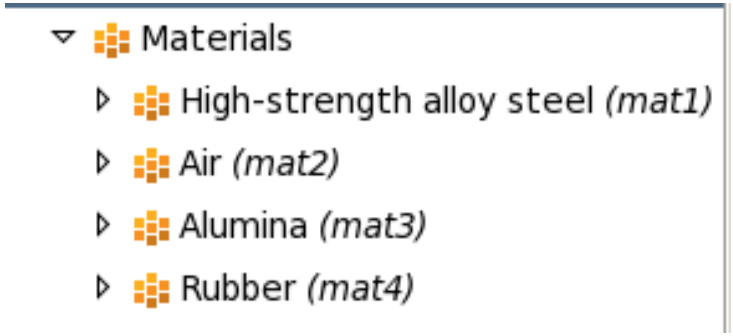

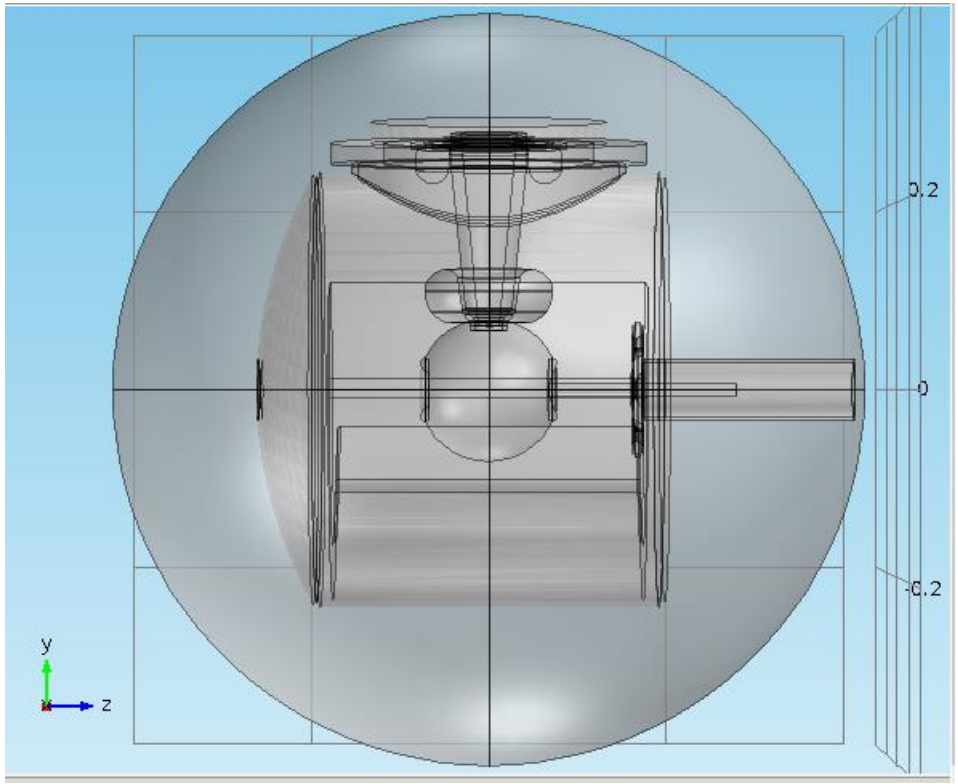

COMSOL electric currents:

- Current conservation in all domains.
- Electric insulation at the outer air boundary.
- Initial value (of potential) set to zero by default.
- Ground 1 at vacuum chamber, NEGs, anode, flanges, upper shed.
- Electric potential at -300kV at the cathode, cathode shed and HV cable.

Electric Currents *(ec)*

- Current Conservation 1
- Electric Insulation 1
- Initial Values 1
- Ground 1
- Electric Potential 1

Equation

Equation form:

Study controlled

Show equation assuming:

Study 1, Stationary

$$\nabla \cdot \mathbf{J} = Q_j$$

$$\mathbf{J} = \sigma \mathbf{E} + \mathbf{J}_e$$

$$\mathbf{E} = -\nabla V$$

COMSOL mesh:

- Mesh 1
  - Size
  - Free Tetrahedral 1
  - Free Tetrahedral 5
  - Free Tetrahedral 2
  - Free Tetrahedral 3
  - Free Tetrahedral 4
    - Size 1

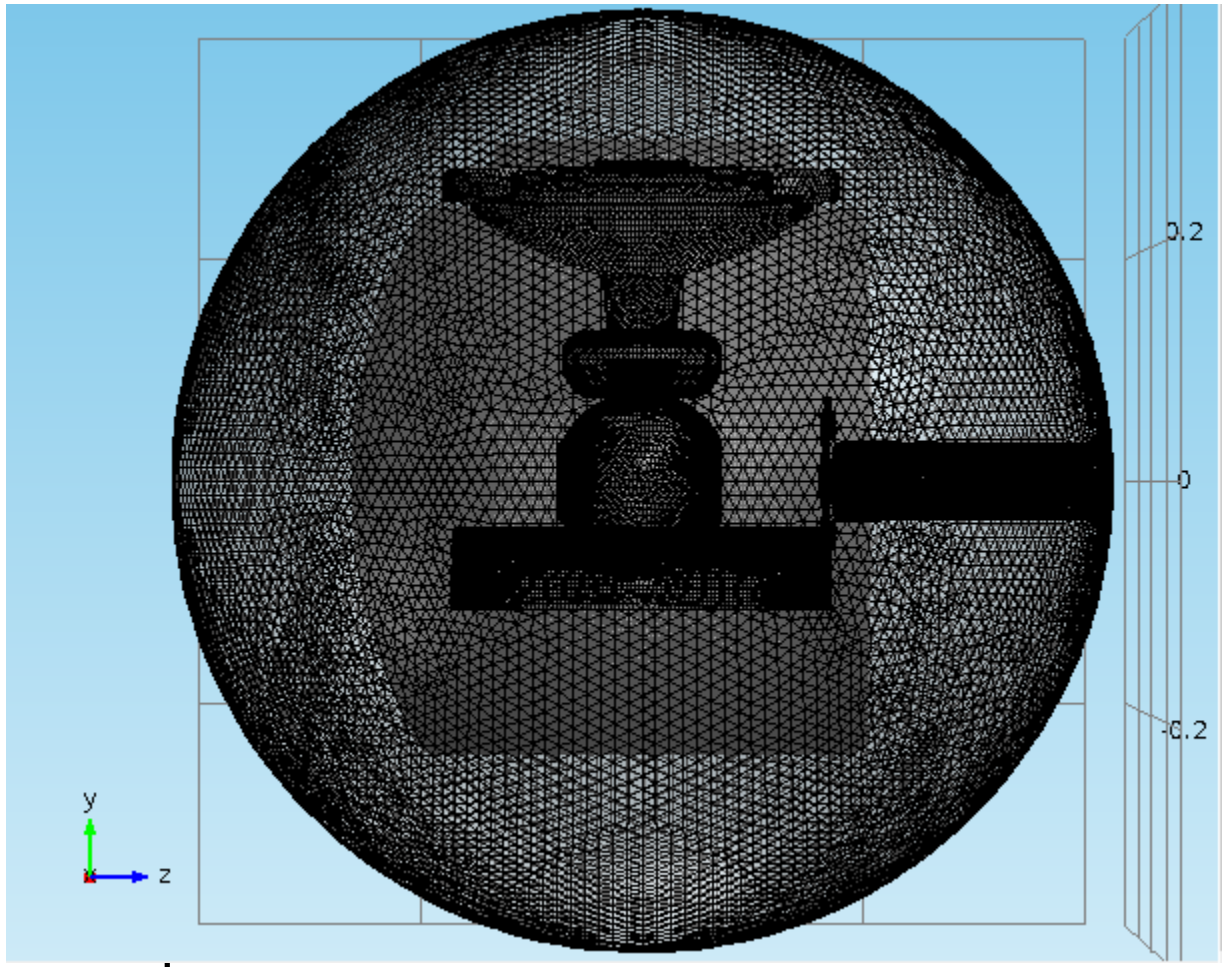

- The mesh was separated into 5 pieces.
  - A general physics extra fine mesh was used. (min element size 1.2mm)
  - Except for the air (vacuum) sphere, where an extremely fine semiconductor mesh was used. (min element size 1.5mm)

COMSOL Study:

- Study 1
  - Step 1: Stationary
  - Solver Configurations

- The study solves for the electric field and potential including the effect of the conductivity of the materials using the currents module.

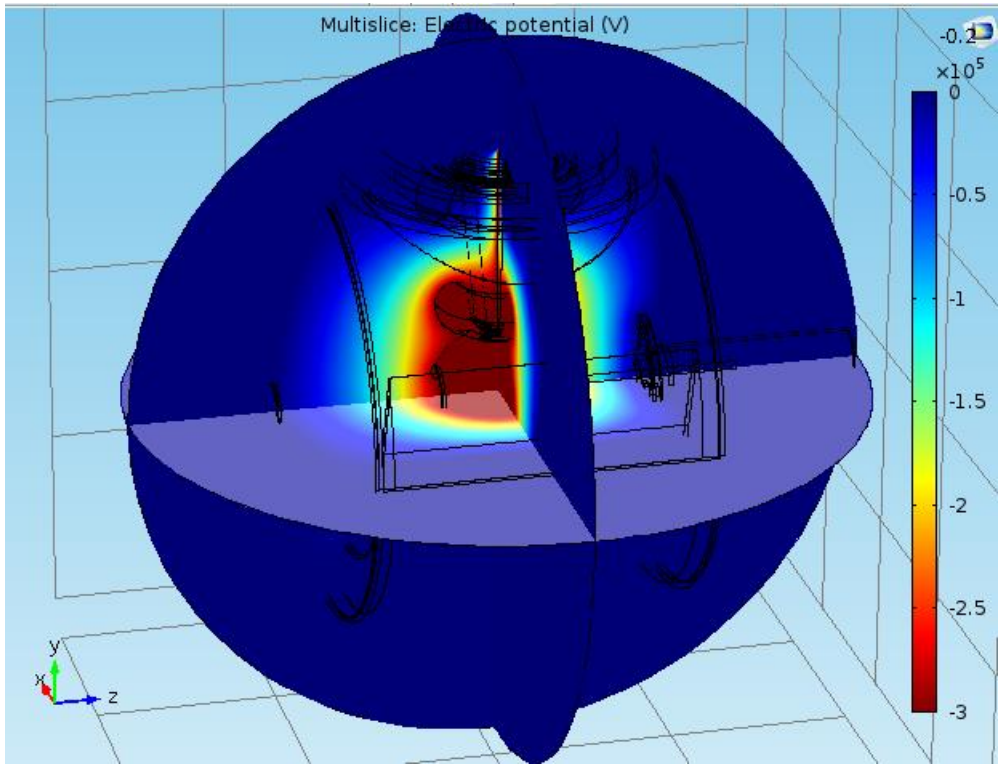

COMSOL results:

- The results for the electric field components Ex, Ey, Ez where plotted along a line from the photocathode center to the anode center as a function of **z-coordinate.**

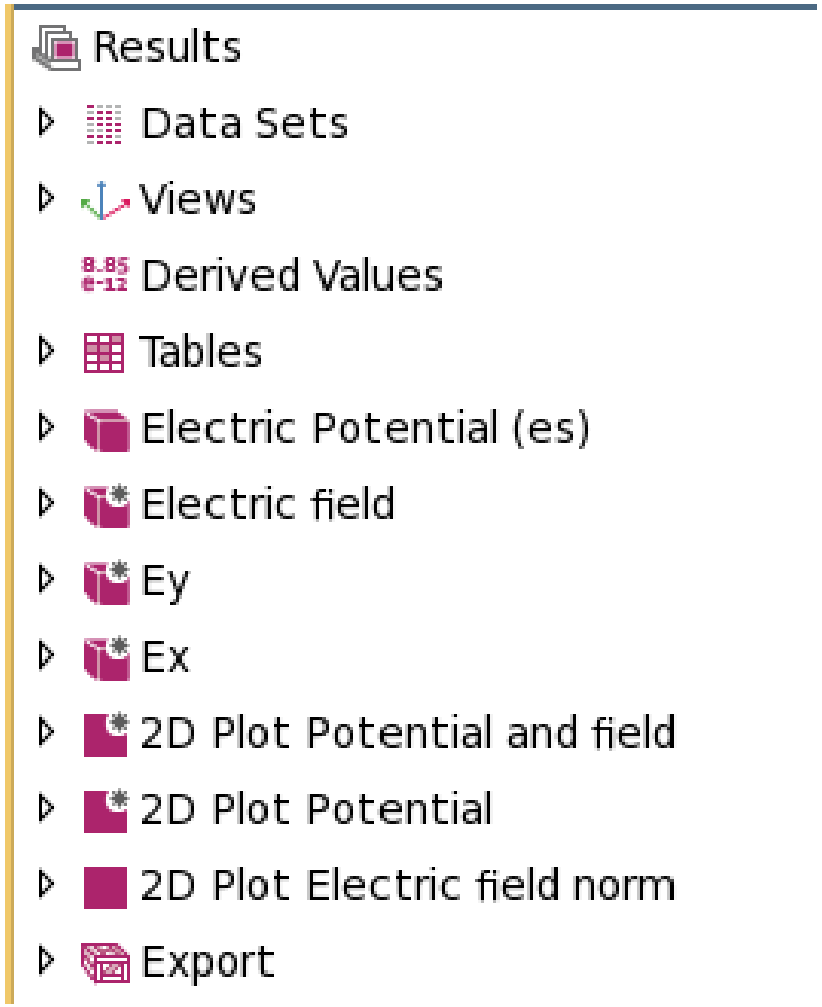

Photocathode-anode line:

The data for the following plots was taken along a horizontal line from the center of the photocathode to the back of the chamber passing through the anode center of 18cm as shown in the red line, this was done for the **21°, 23°, 27°, 29° Pierce angle.**

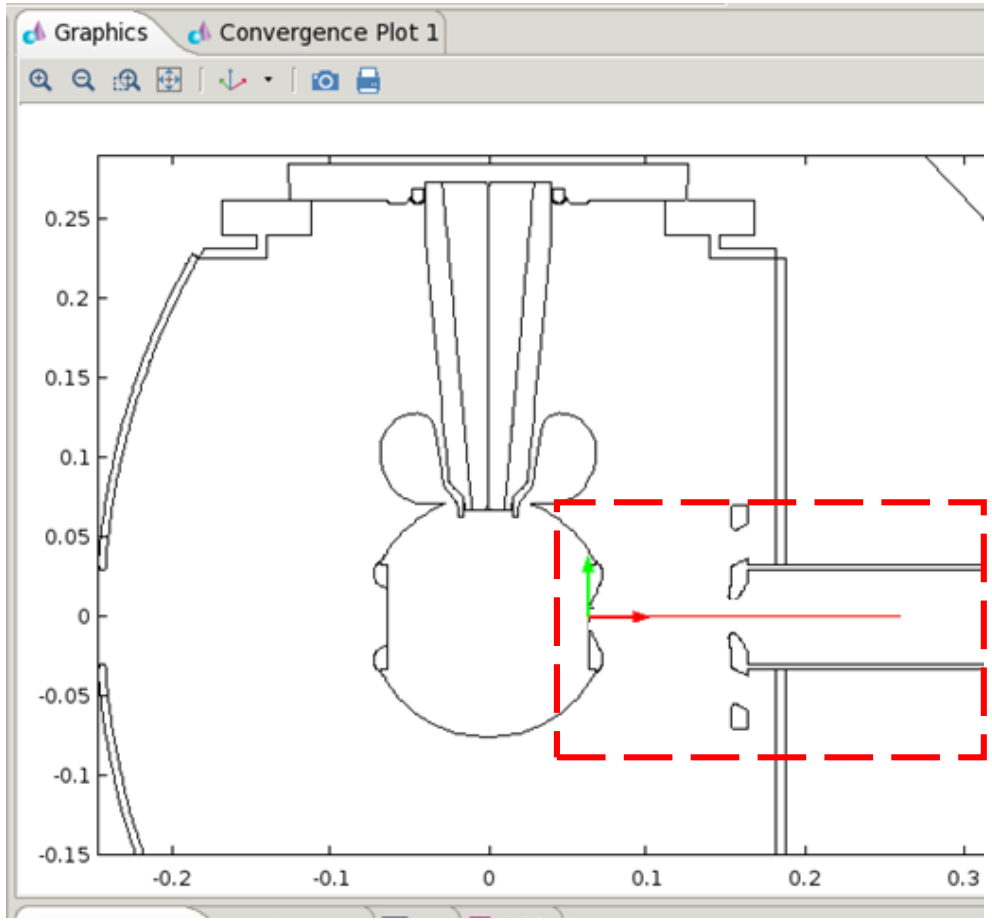

Photocathode-anode line :

- This image shows the electric field Ex component in MV/m as a function of position on the z axis.

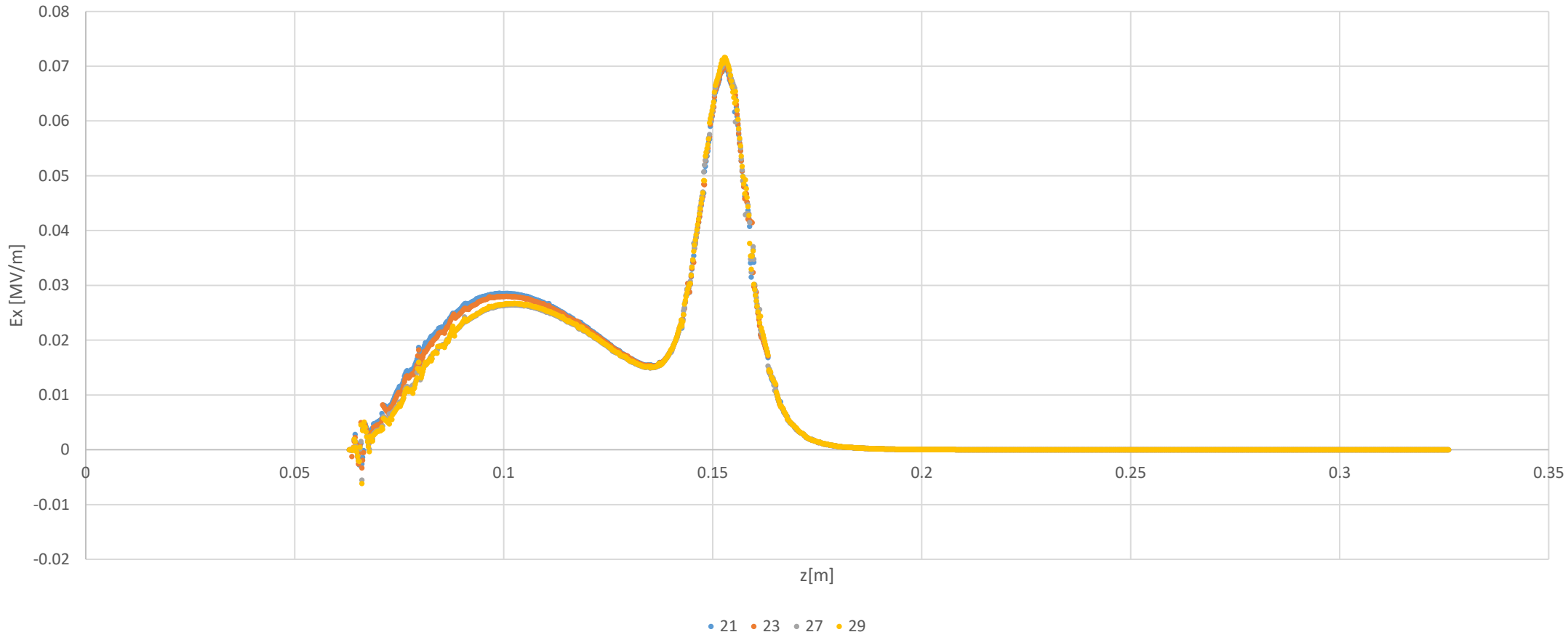

Photocathode-anode line :

- This image shows the electric field Ey component in V/m as a function of position on the z axis.

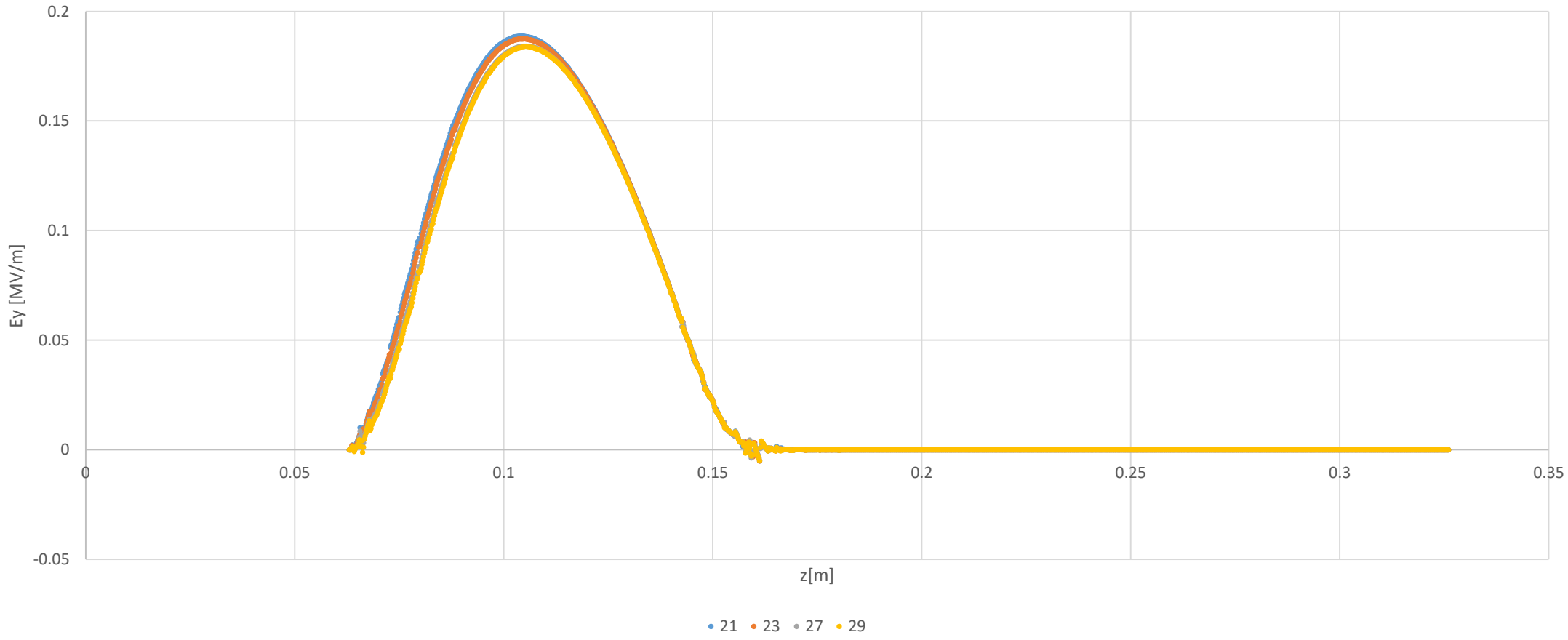

Photocathode-anode line :

- This image shows the electric field Ez component in V/m as a function of position on the z axis.

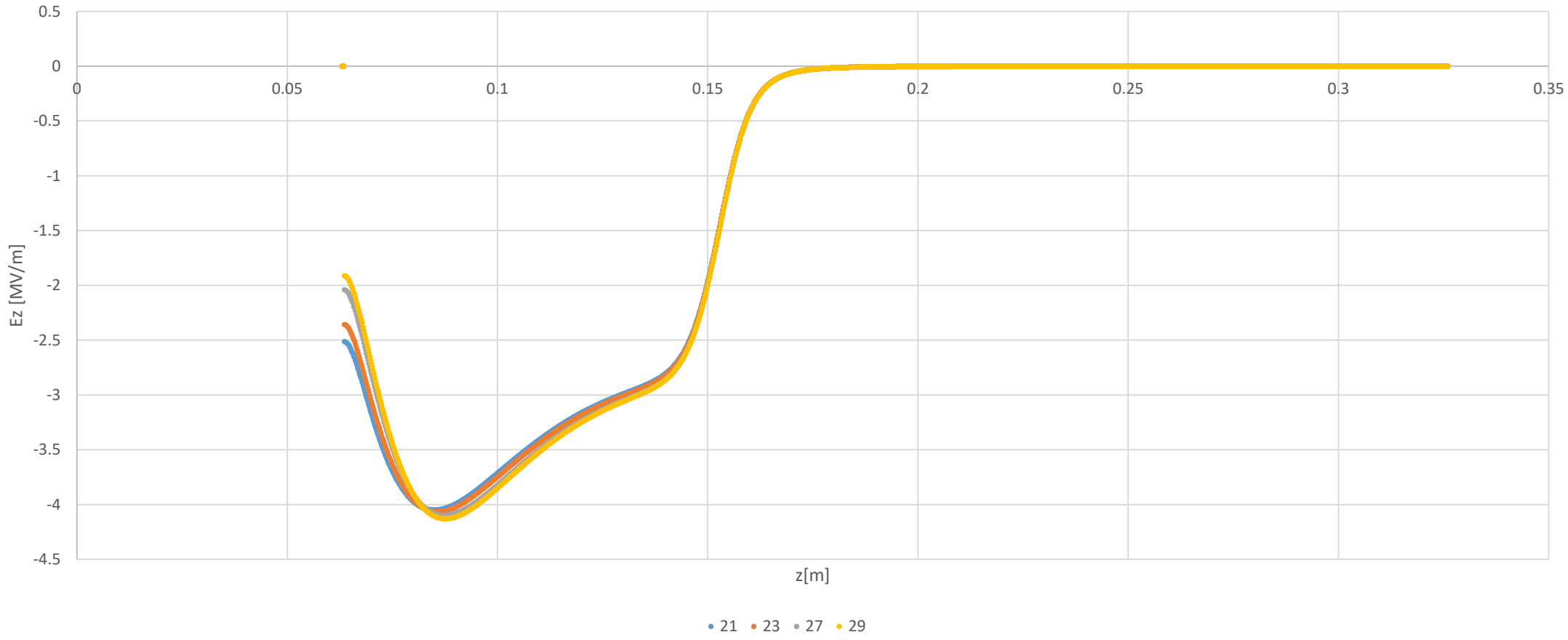

Future steps.

- **Get field maps!**
  - **The files are in the O drive**

Fin.

COMSOL frame of reference:

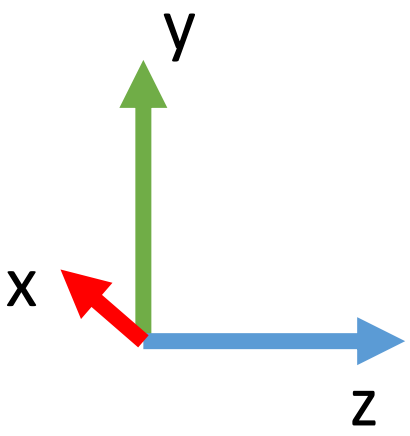

X goes into the page.

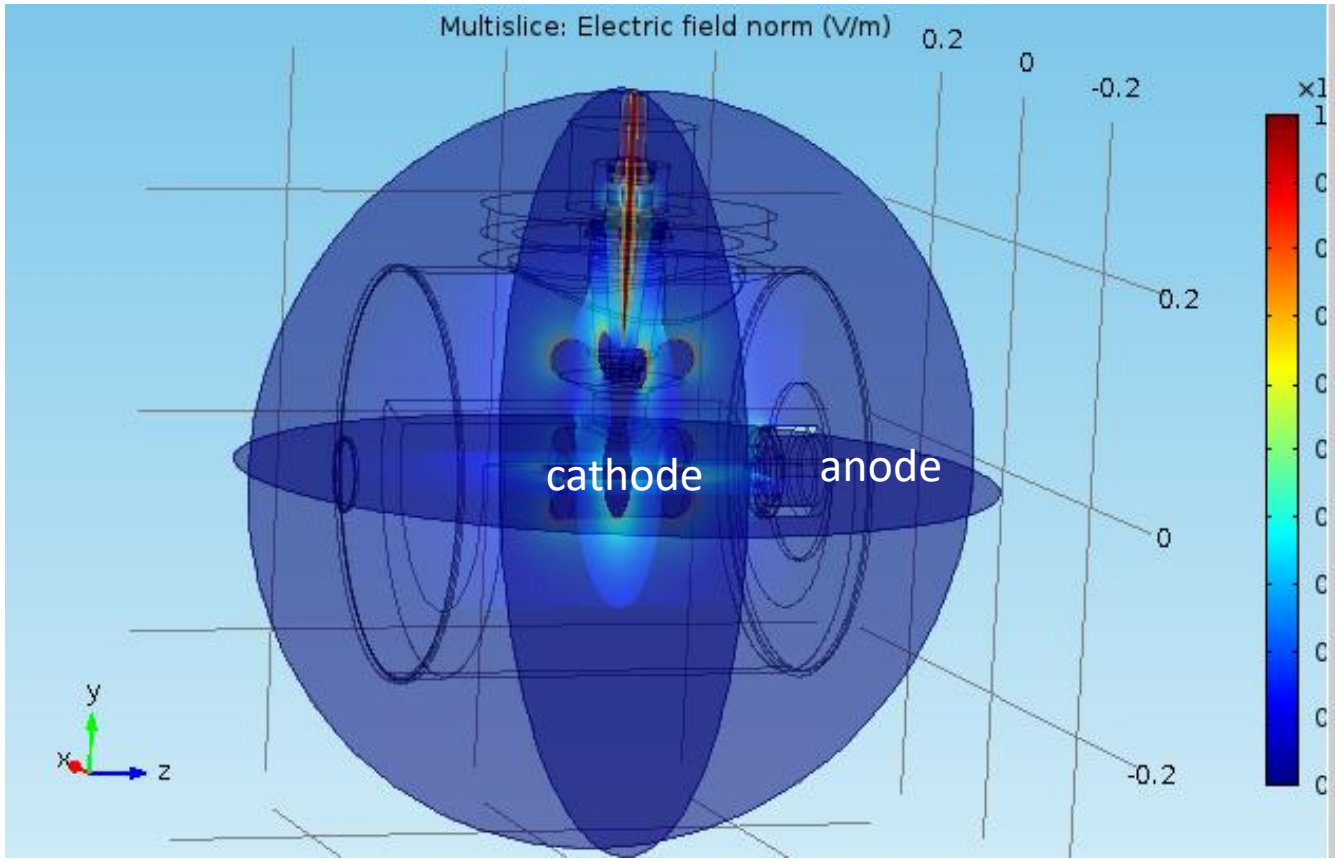

- This image shows the electric field norm |E| in MV/m as color intensity. The coordinate system is as shown for all plots and images the origin is at the center of the cathode electrode. (The anode is at the right)