T-cathode gun summary

Dec 12th 2019

Gabriel Palacios

gabrielp@jlab.org

Read me

- This is the model I generated in Solidworks based on the original STEP files and construction drawings provided by the design dept. Most of the parts where remodeled in order to remove unwanted features (bolt holes and knife edge grooves) unnecessary for the simulations.
- I used this model for the electrostatic simulations of the T-cathode electron gun. The result shown here were obtained using CST Microwave studio.
- The 3D model images shown in this document are screen captures after it is imported to CST Microwave studio.
- The model consists of 11 simplified parts. The separation of the model in this way allows for better meshing of relevant sections for the electric field simulation as well as optimizing resources by omitting irrelevant details (bolt holes, internal puck holder, etc).
- The Parasolid file can be downloaded from: https://jeffersonlab-my.sharepoint.com/:u:/g/personal/gabrielp_jlab_org/Eb7QNjXqAjNHjKnEQZIxuwYBdT1GKG9lceJbsqHbNPChFA

GTS gun parts

- Cathode electrode
- Cathode triple point
- HV cable
- Kovar ring
- Anode
- Beamline
- Vacuum chamber
- NEGs
- Insulator
- Rubber plug
- Flange

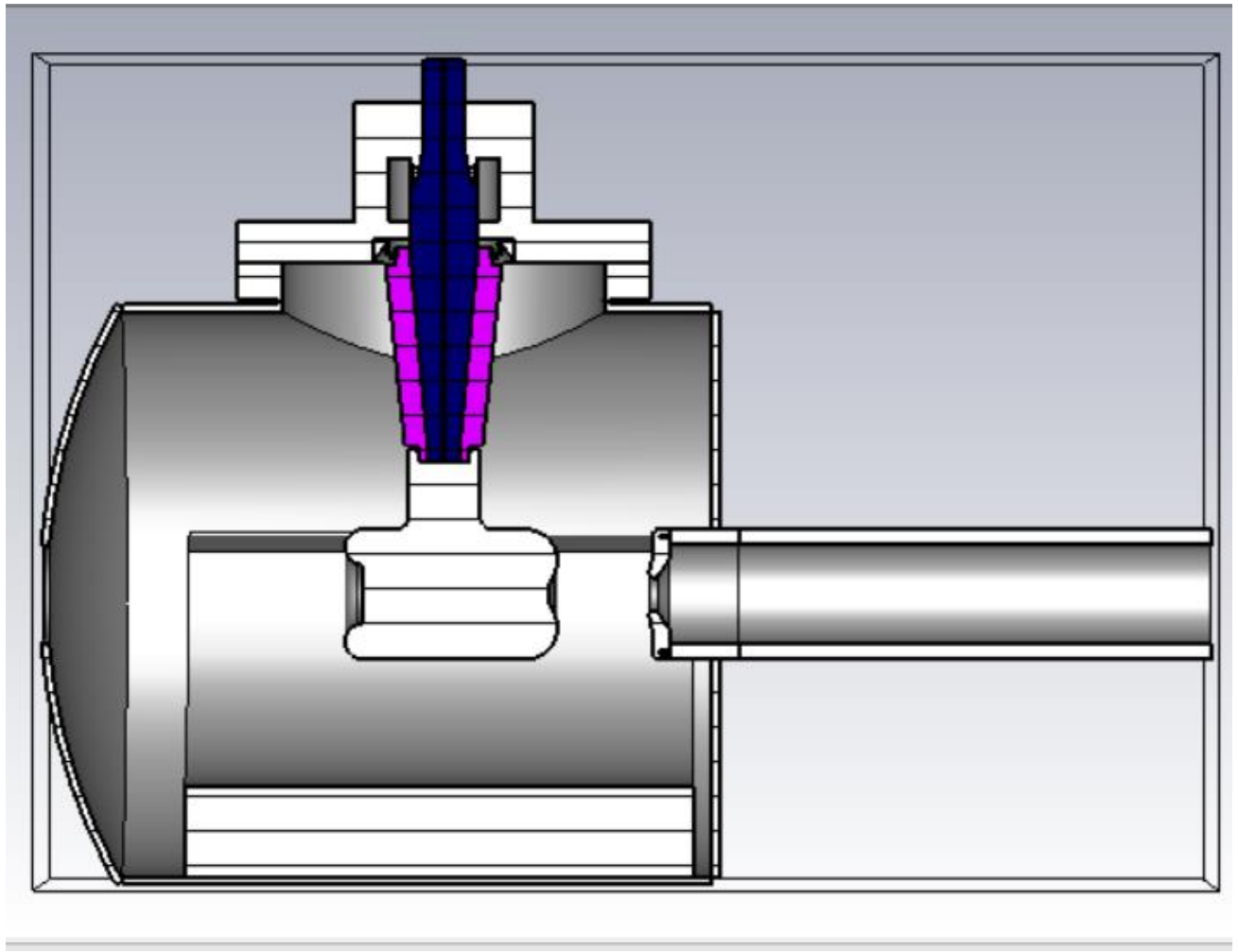

Cathode electrode

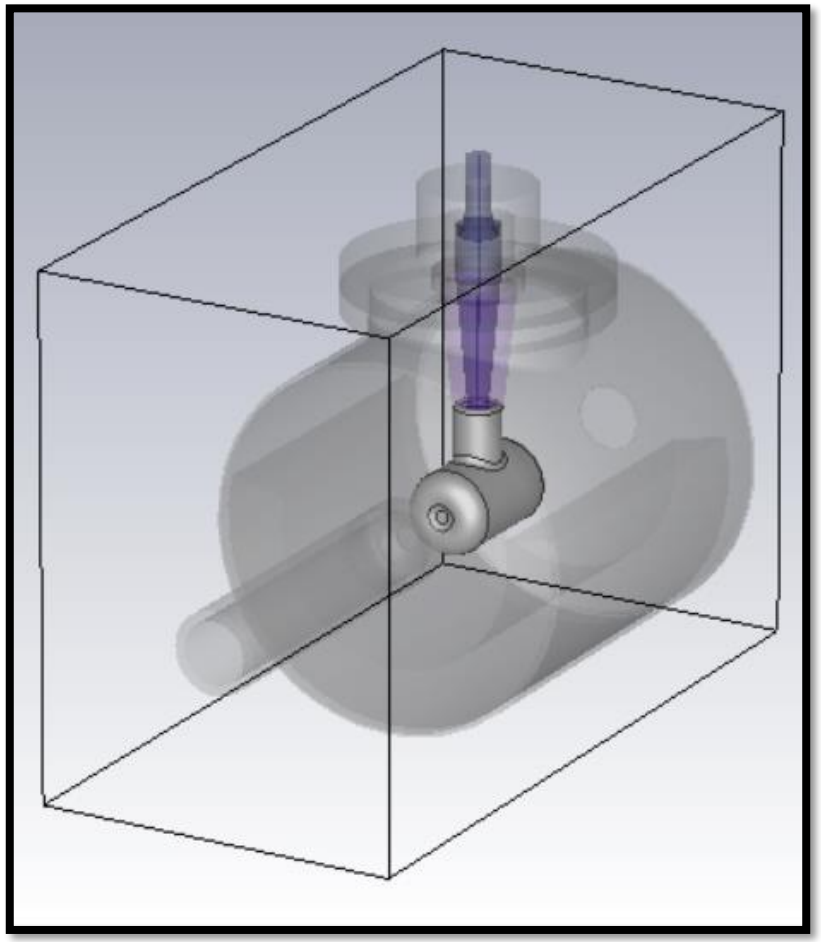

Cathode triple point

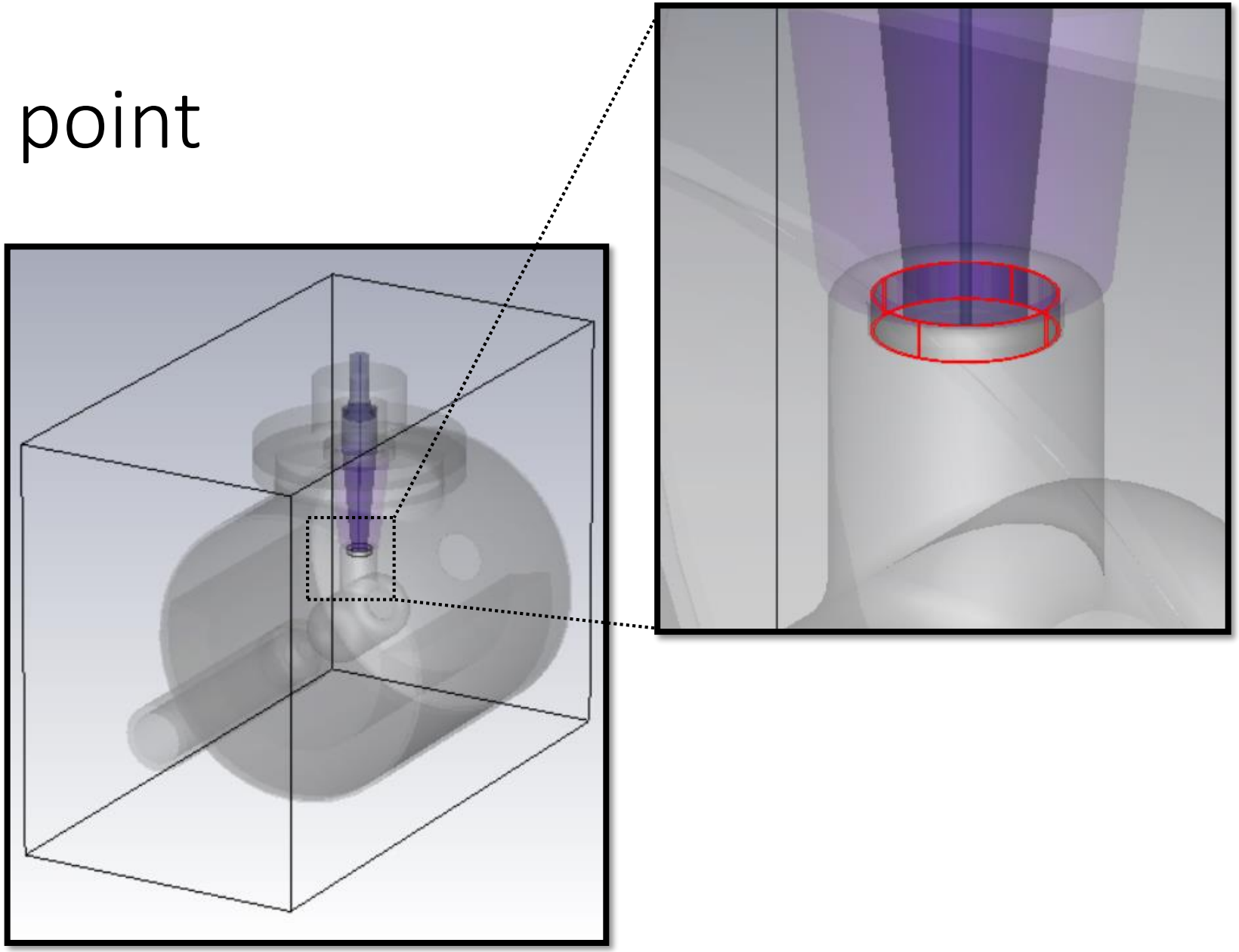

HV cable

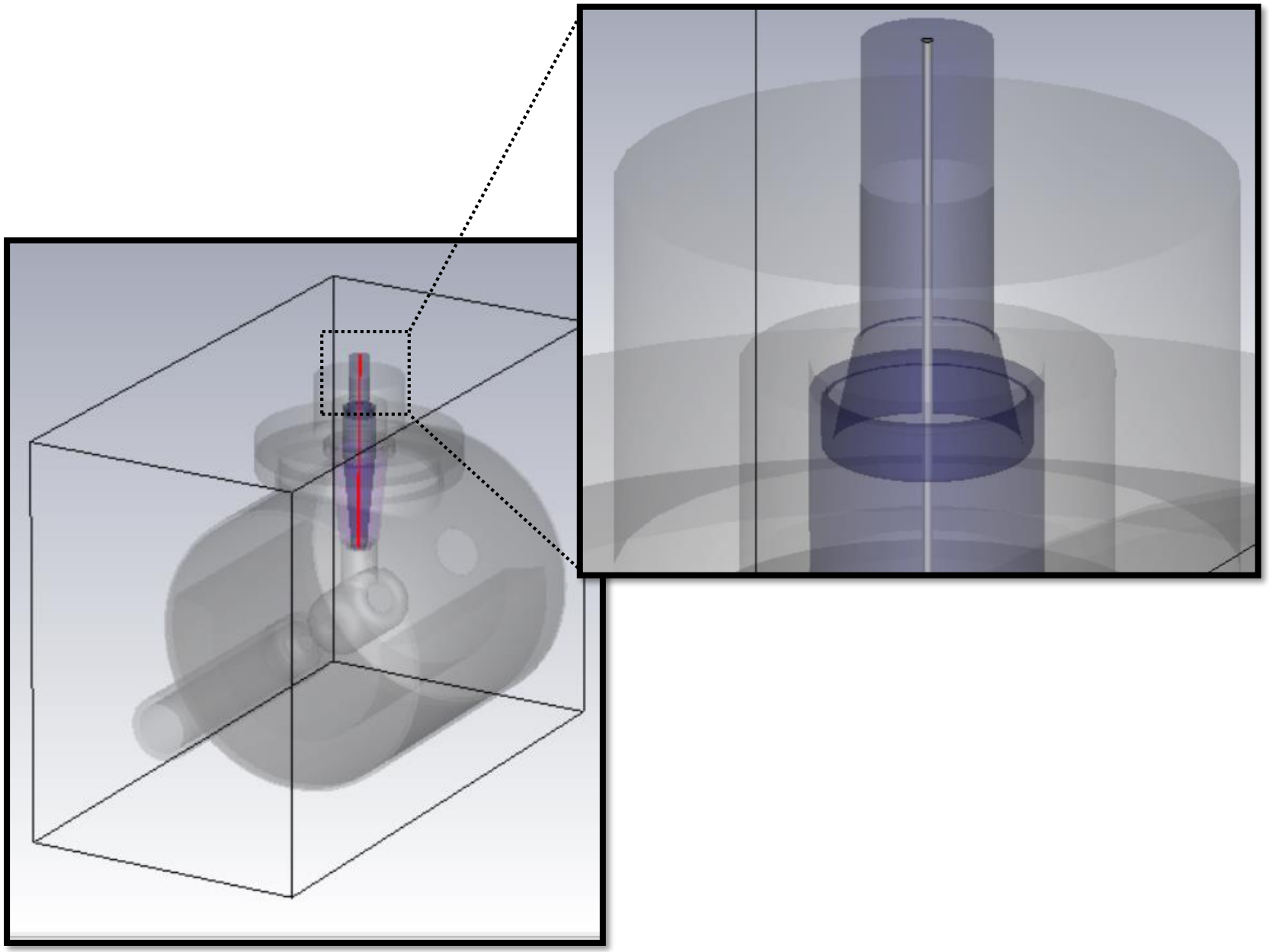

Kovar ring

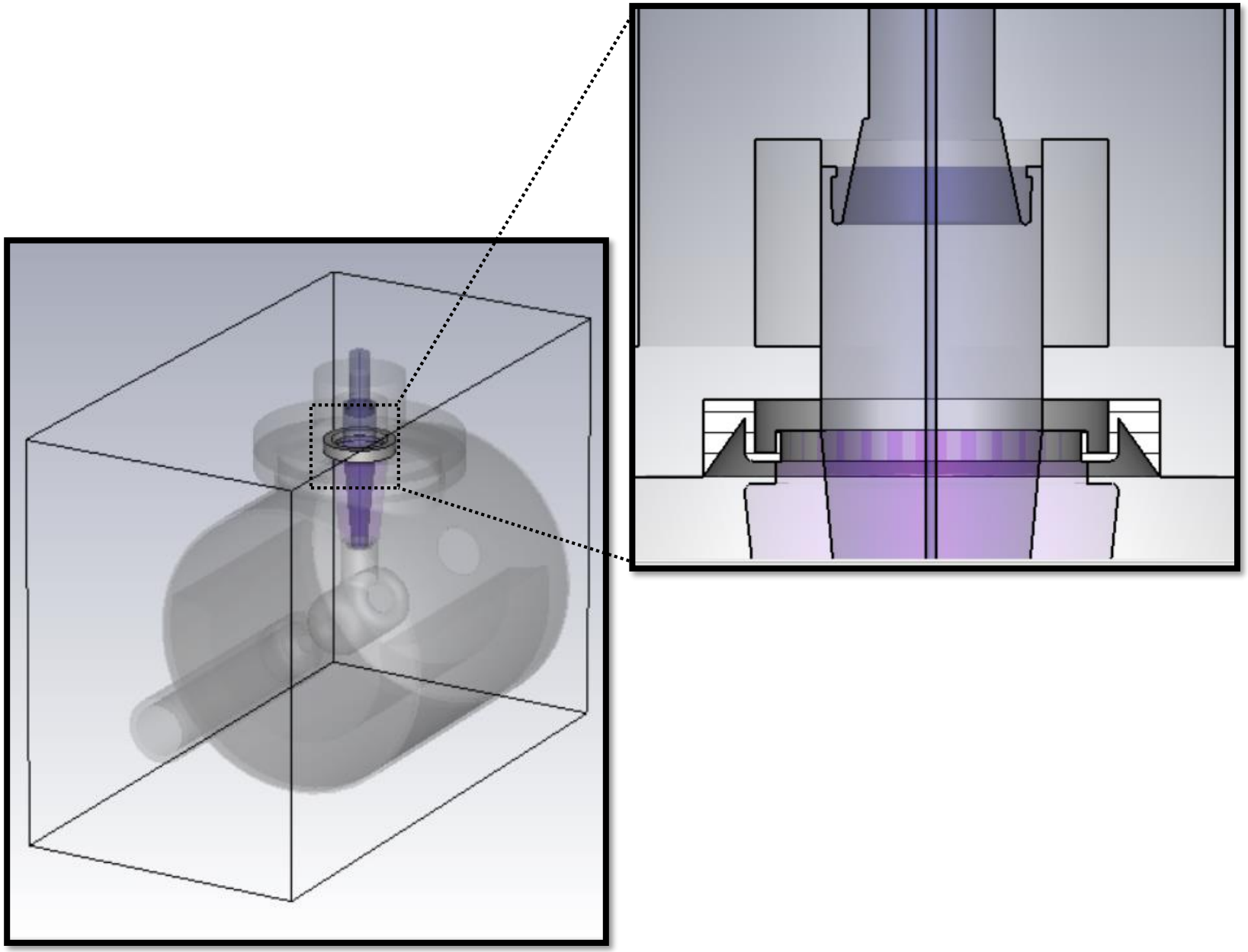

Anode

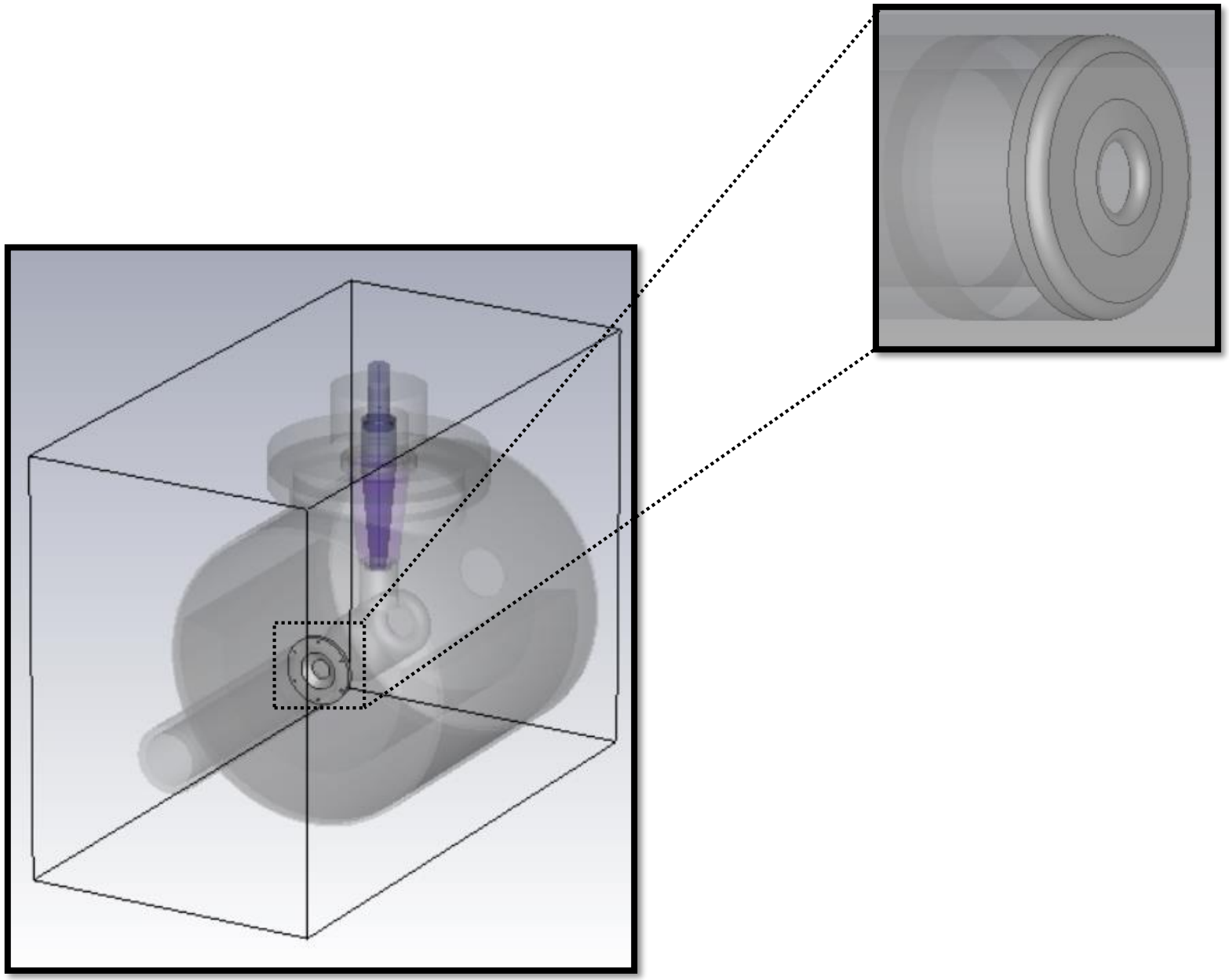

Beamline

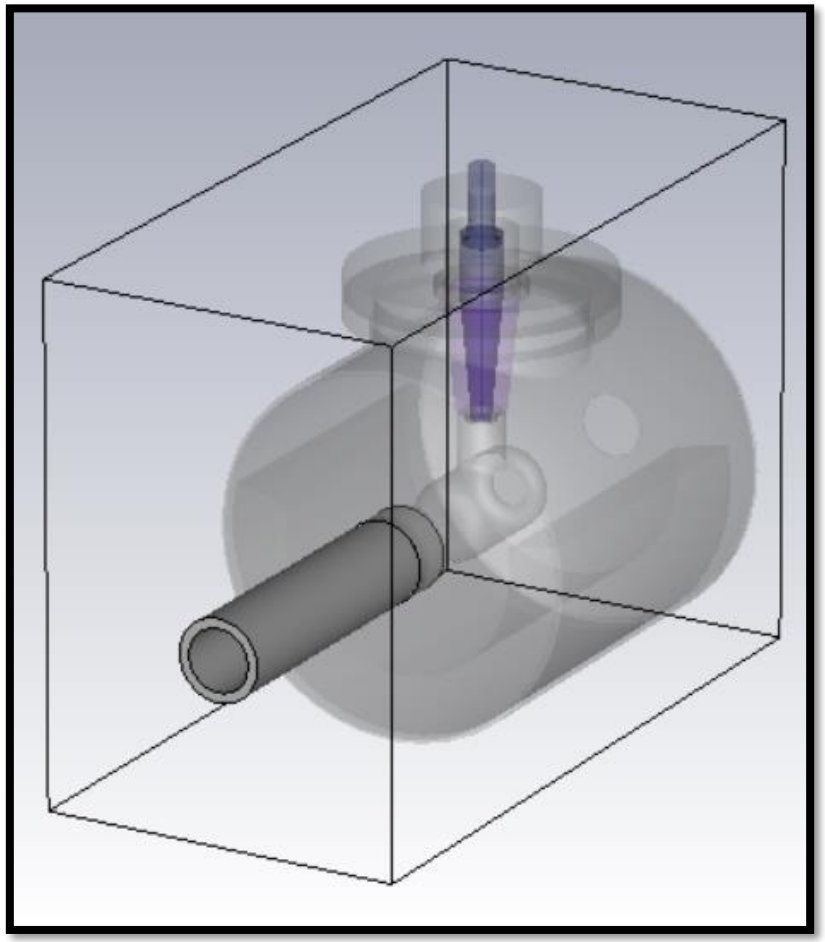

Vacuum chamber

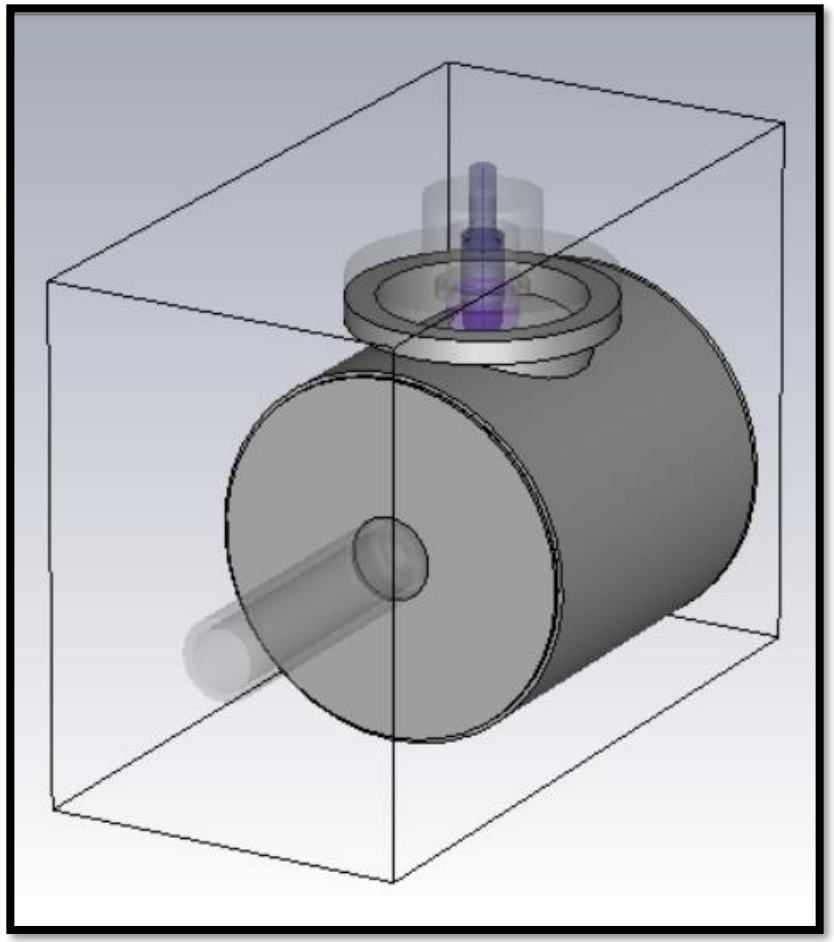

NEGs

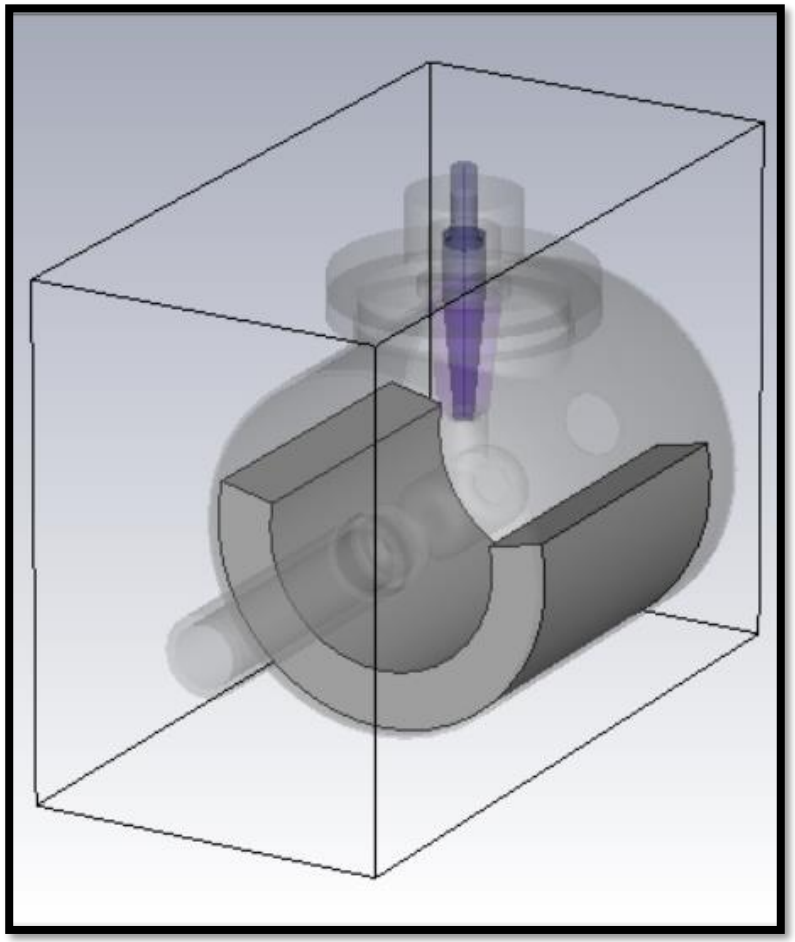

Insulator

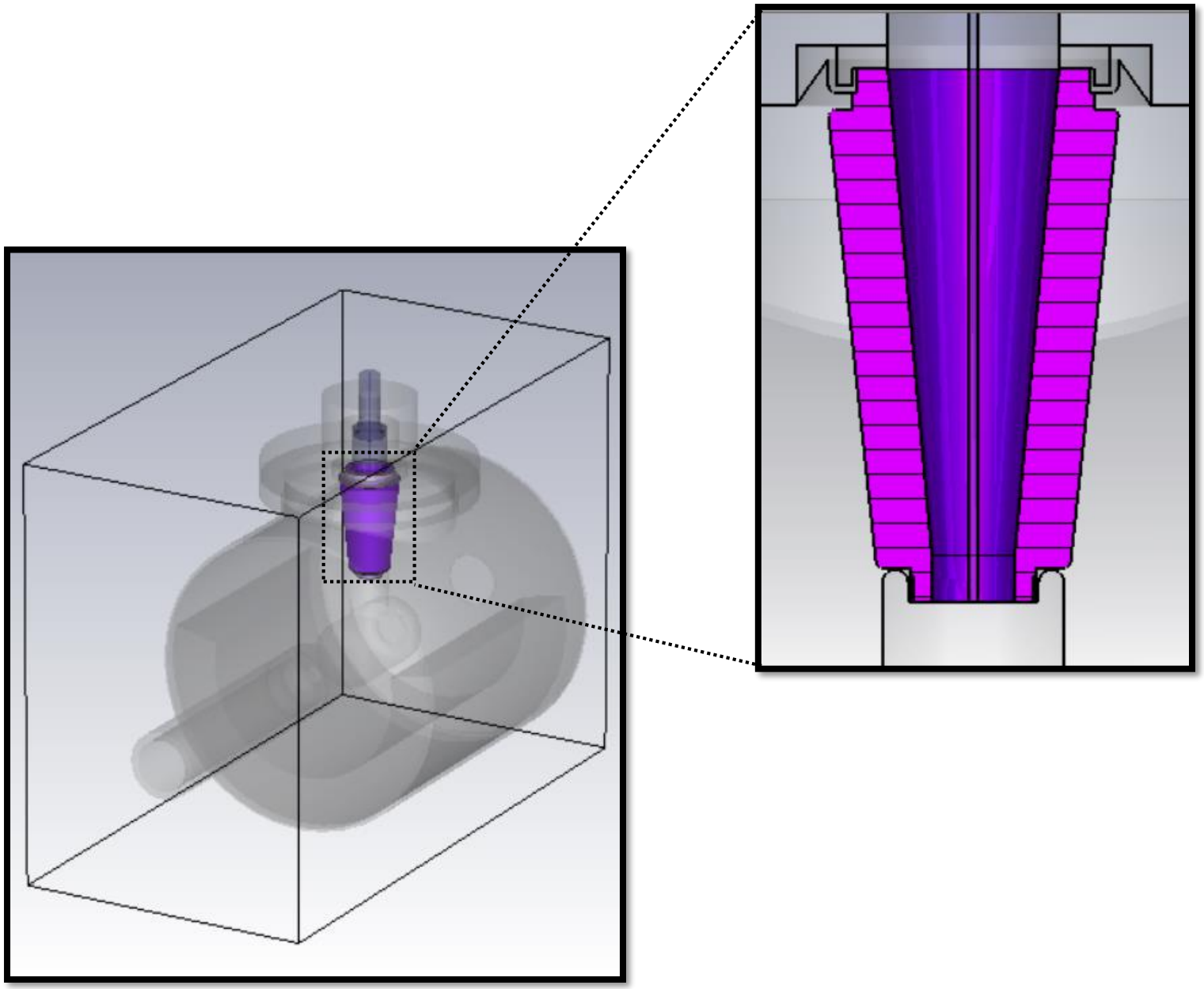

Rubber plug

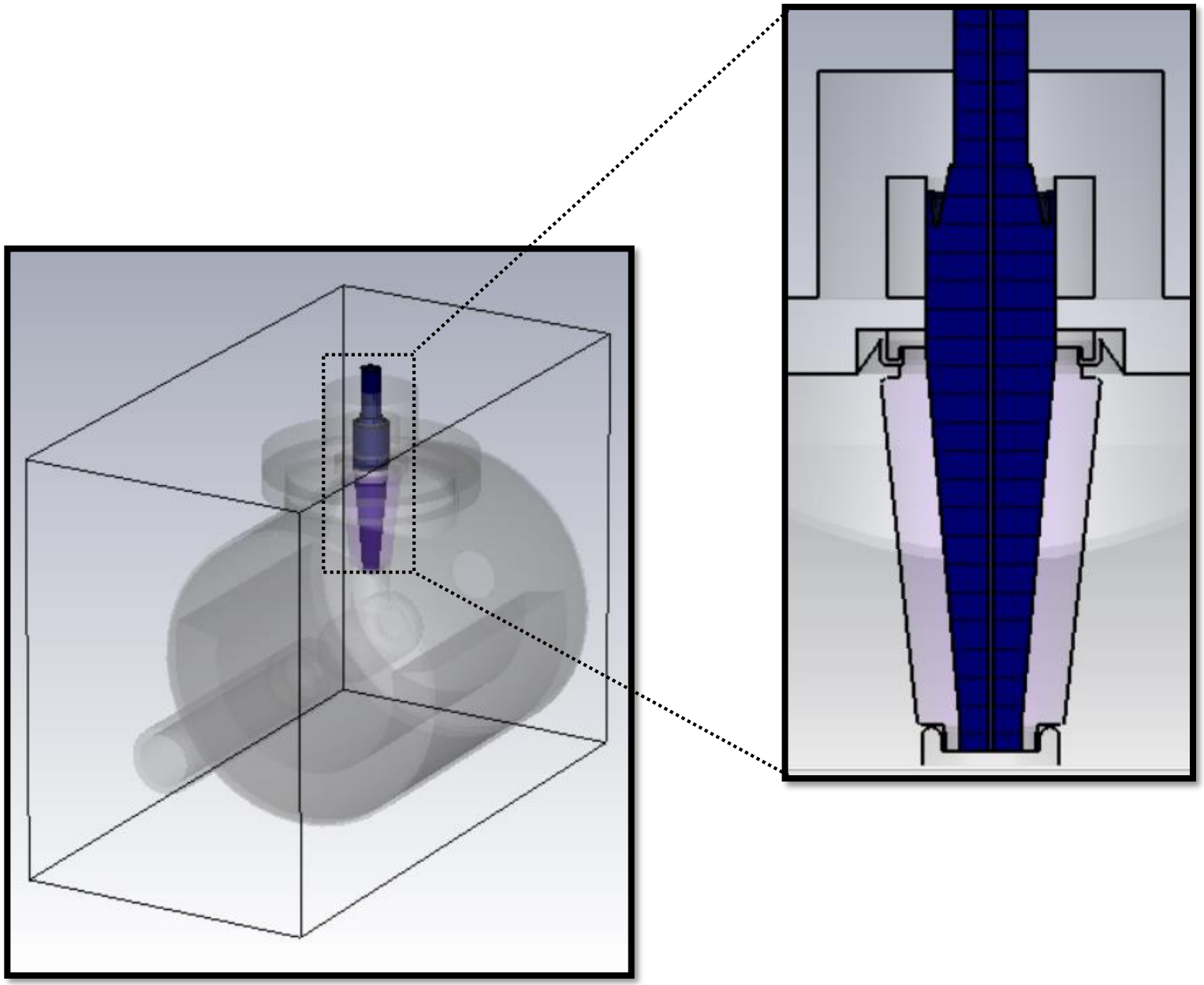

Flange

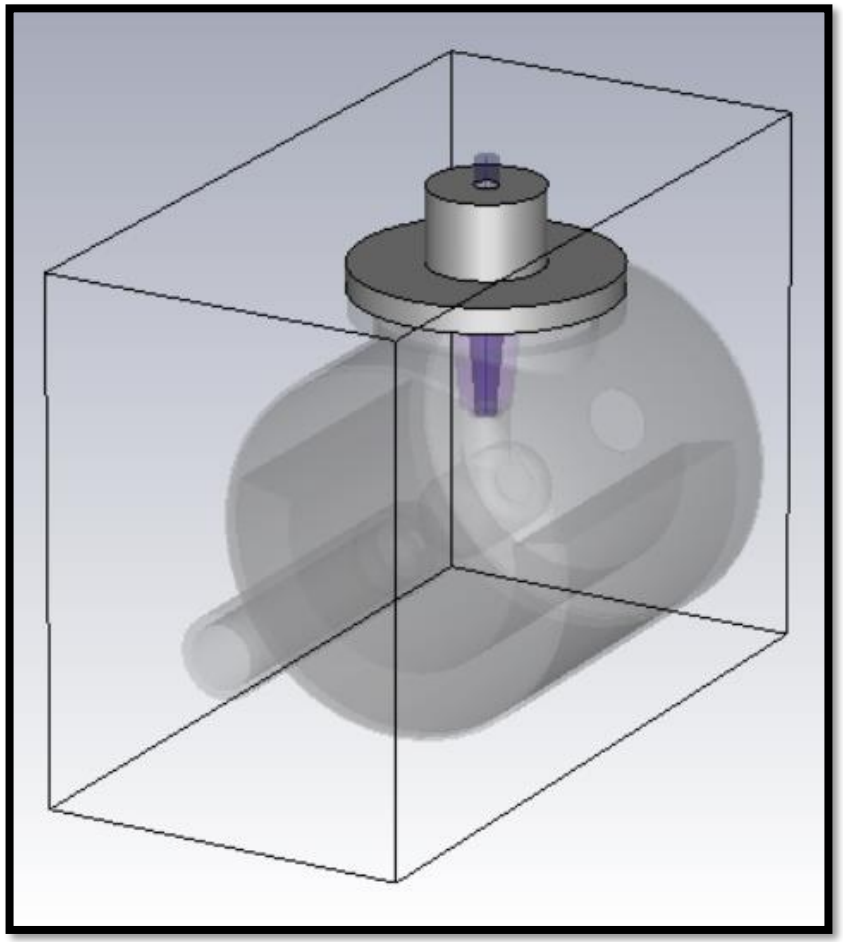

CST Potential isolines at -130 kV

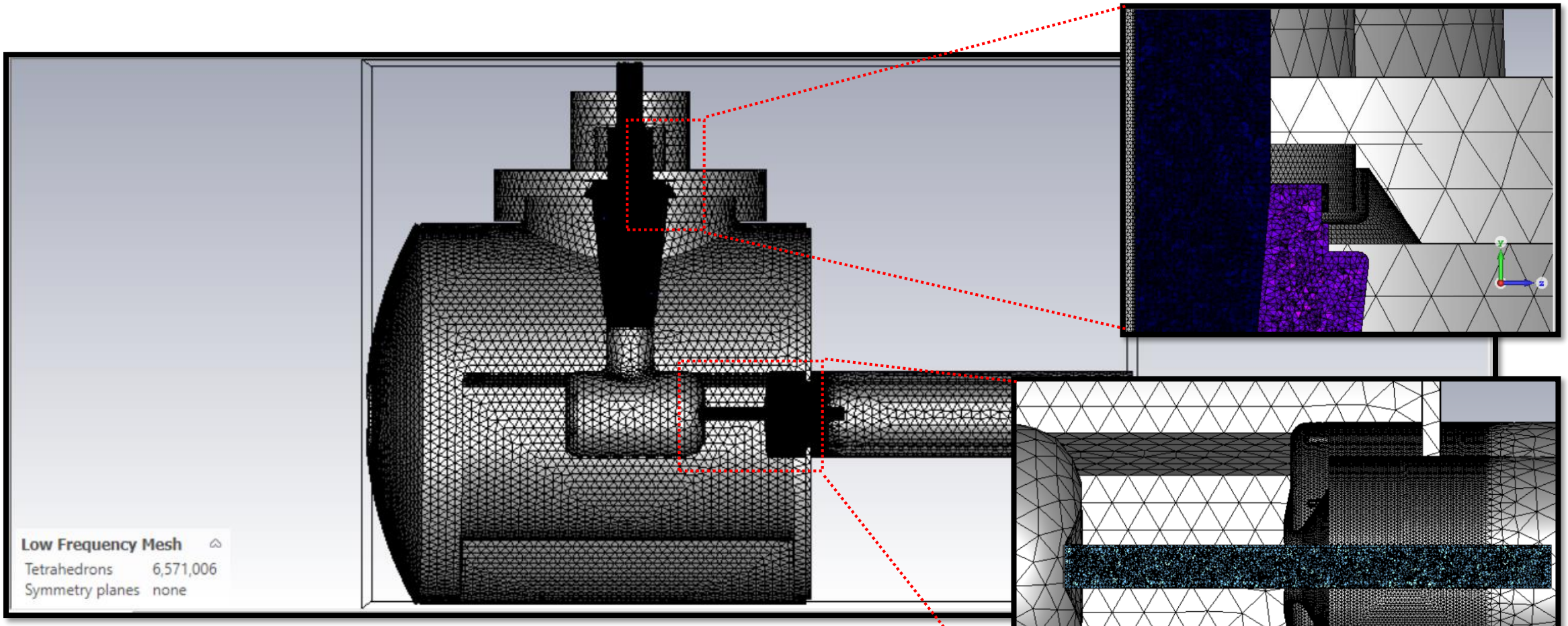

The cylinder shown in the cathode-anode gap is not considered for the simulation, only for the mesh in order to obtain fine results for the field maps in this region.

CST Potential isolines at -130 kV

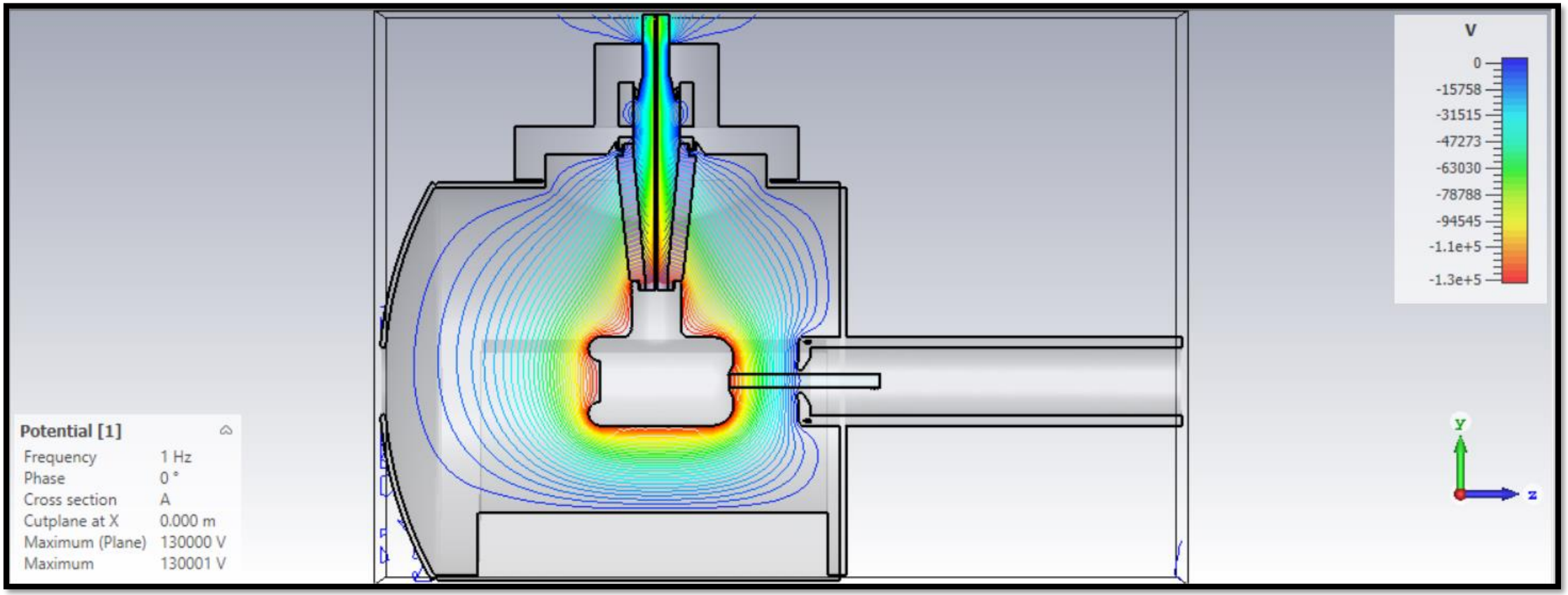

CST electric field norm at -130 kV

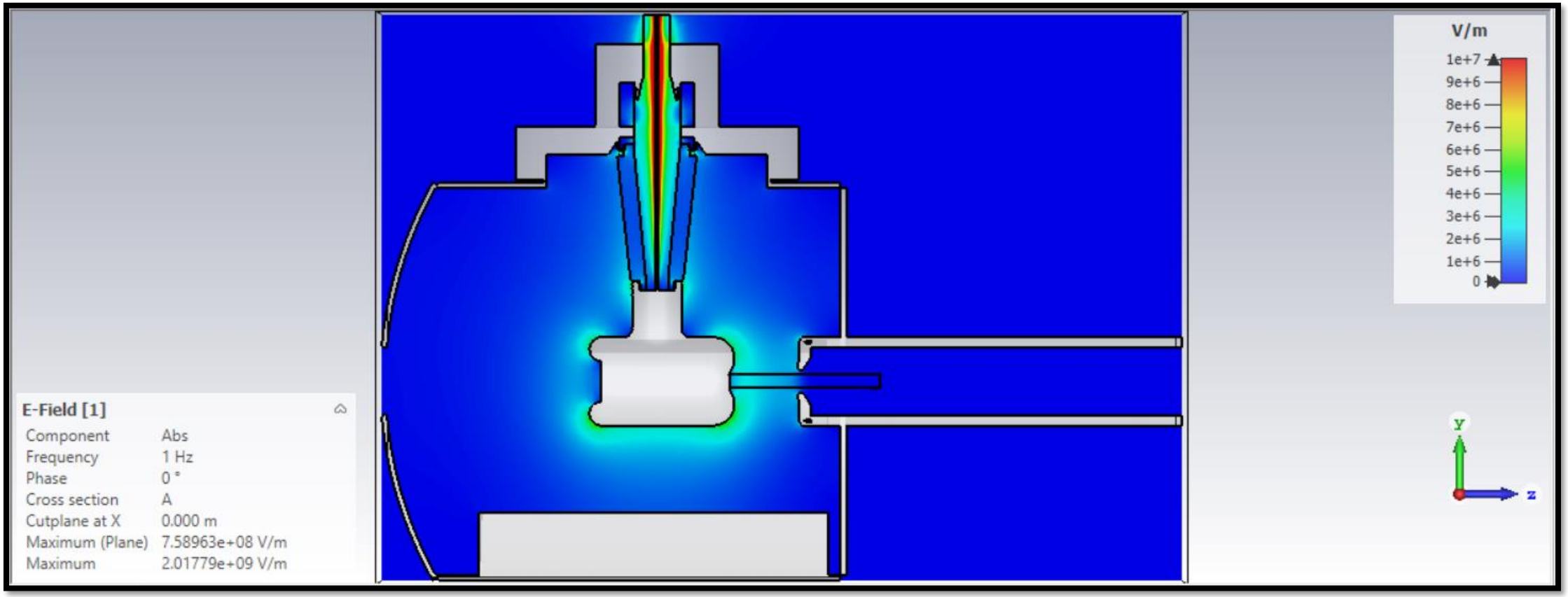

The electric field norm |E| shown here in false color is shown by setting the upper limit to 1E7 V/m.