September 10, 2015

Bremsstrahlung experiments at JLab.

Liquid in bubble chamber = N_2O + Hg

Brad filled the system yesterday. He reports that filling up Hg might have been slower than at Argonne.

The glass walls are very clean of Hg droplets.

Temperature values in Labview: There is a small mismatch between the RTD readings in the control box and the Labview values. Yesterday we tried adjusting the constants the software → $y = mx + b$.

The signal received by labview is 0-10V and the temperature readings range from −30°C to 30°C.

$\Rightarrow$ $m = 6$, $b = -30$ temp = m(voltage) + b

Upper RTD: $m = 6$, $b = -29.1$

Lower RTD: $m = 6$, $b = -29.2$

} Set on Sept 9, 2015

Chiller @ −22.3 °C

Temperature readings (Labview time CST) 8:25a

	control box		Labview
Upper	−7.2	⟷	−7.4
Lower	−8.5	⟷	−8.7

The Labview code logs an average of both temperatures. Need both separate.

Change logging code ASAP to record temperatures and pressures separate.

Software settings:

Recovery delay (s)	= 10
Pixel gain	= 10
Pixel value low thres	= 200
Pixel value high thres	= 65535
NPixels Low	= 6
N Pixels High	= 200
Max Diff Press	= 10
Dark Image Threshold	= 150
Diff Press Max	= 13

Image Save Path
C:\Documents and Settings\Administrator\My Documents\bobbiel\Sept2010\Jlabfill9sep\

Pressure & Temp readings (Labview)

Temp up	-7.2		
Temp down	-8.5		
Press out	~820	↔	320
Press in	~820	↔	320
	veto		superheat

Image analysis time ~ 10 ms

Recovery time 10 sec

Run 1

9:00 am Active times 1-2 minutes

9:28 am = Source is here AmBe 6.3×10^4

Source placed next to Cu collimator @ surface of insolation.

9:35 am Active times are now just a fraction of a second ~ 0.6 s

9:39 am Brad lowered the illumination intensity 1.1 Amps in supply (were at 1.8 Amps)

Detector is now vetoed from dark image threshold. Mean image brightness 108

9:41 am reducing dark image threshold now at 100

System active again

9:52 am
Moved neutron source 17.3 inches from back on μ-stopper

Run 2

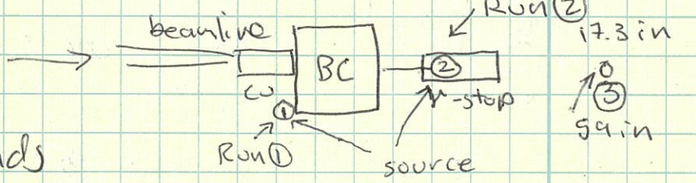

Active times 2-3 seconds
Stopped 10:03 am

Run 3 start 10:04 Source at 59 inches

Active times over 10 s

10:11 am Big bubble formed at top. System missed

stop 10:15

10:17 Adjusting system time (Labview) Now EST

Source back at position (1)

Run 4 10:18 Pressure variation. Will try very slow decompression.

Source not strong enough to try this slow decomp

Brad is changing pressure little by little manually.

Threshold appears to be at 340 psi
350
345
340

340 psi is threshold for this source

Temp up −7.3 } LabView
Temp down −8.7 } values

Stop 10:26

Source is gone

Run 5 Cosmic background. Pressure back to 325

Start 10:24 10:27 am
Stop 11:39 am

Injector room being swept

3:00 pm - waiting for beam
Amp in chopper PS in north linac down. 2 hour estimate.

Sources

Americium-241/Beryllium

Neutron Sources

Source Emission Data

Neutron emission:	~2.2 x 10^6n/sec per Ci ~6 x 10^7n/sec per TBq
γ-exposure rate:	~2.5mR/hr at 1m per Ci ~Air kerma rate at 1m of 22μGy/h per Ci
Neutron dose rate	2.2 mrem/h at 1m per Ci 22μSv/h at 1m per Ci

Note
(α-n) beryllium neutron sources also emit a significant number of low energy neutrons.
(~23% below 1MeV with mean energy 400keV)

Cylinder sources
Compacted mixture of americium oxide with beryllium metal, doubly encapsulated in welded stainless steel.

Nominal content activity GBq	mCi	Emission* n/sec	Capsule type	Code
37	1	2.2 x 10^3	X.2	AMN.11
111	3	6.6 x 10^3	X.2	AMN.13
370	10	22 x 10^3	X.2	AMN.15
1110	30	66 x 10^3	X.2	AMN.16
1110	30	66 x 10^3	X.21	AMN.168
3700	100	220 x 10^3	X.2	AMN.17
11100	300	660 x 10^3	X.2	AMN.18

*Tolerance ±10%

Recommended working life: 15 years

Quality control
Wipe test A
Bubble test D
Immersion test L

Neutron emission measured against standards using BF_3/wax moderator system.
The test report includes a statement of the neutron emission.

Calibration for Am-241/Be neutron sources
Special calibrations of neutron emissions can be made on these sources and certificates issued by the National Physical Laboratory, Teddington, England.

Neutron spectrum

Source made and measured at AEA Technology using a stilbene crystal and pulse shape discrimination.

Spectrum reproduced by courtesy of: LORCH, E.A. *Int J.Appl. Radiat. Isotopes*, 24, 590, 1973.

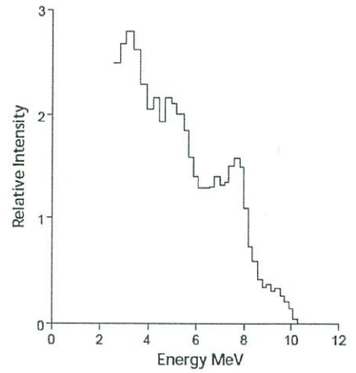

X.2

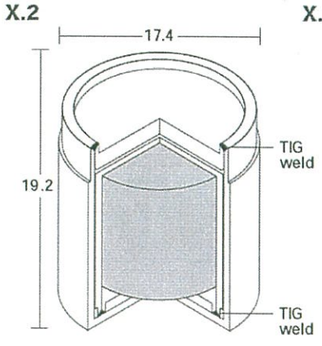

X.21

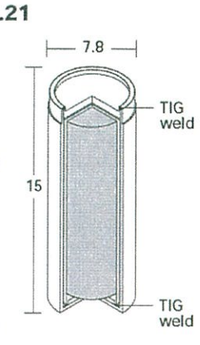

Safety performance testing

Capsule	ANSI/ISO classification	IAEA IDNS model no.	Model no.
X.2	E.66646	GB/8/S-85	AMN.PE1
X.21	C.65545	GB/43/S-85	AMN.PE5

B6

United Kingdom: 329 Harwell, Didcot, OX11 0QJ, Tel: +44 1235 431267
United States: 40 North Avenue, Burlington, MA 01803, Tel: 781-272-2000
Germany: GmbH, Gieselweg 1, D-38110 Braunschweig, Tel: 0049 - (0) 5307 - 932113
Hong Kong: Suite 1208 12/F, Central Plaza, 18 Harbour Road, Wanchai, Tel: 00 852 2519 3966

AEA Technology is a business name of AEA Technology plc

AEA TECHNOLOGY QSA

Radioactive source test report

Amersham International plc
Amersham Laboratories
White Lion Road Amersham
Buckinghamshire England HP7 9LL
telephone Little Chalfont (024 04) 4488
cables Activity Amersham telex
telex 83141 ACTIVA G

product code	description	nominal activity	customer
AMN 16	AMERICIUM-241/BERYLLIUM NEUTRON SOURCE	1 1.11 GIGABQ, 30 MILLICURIE	AMERSHAM CORPORATION 2636 SOUTH CLEARBROOK DRIVE ARLINGTON HEIGHTS ILLINOIS 60005 U S A
AI item no. RD9572	SEALED SOURCE		

BSI/ISO classification *	special form certificate no.	recommended working life	customer's order no.
E66544	8	15 YEARS	311735 01 AC NUCLEAR RESEARCH CORP

serial number	measurement check	measurement check date	leakage test	date passed	leakage test	date passed	contamination test	date passed
9942NE	NEUTRONS PER SECOND X 10 TO POWER 4 6.3	17 MAY 89	D 16 MAY 89		L 17 MAY 89		A 17 MAY 89	

notes

signed Paul Nemor K.A. Slipper

date 31 MAY 89

* this classification complies with BS.5288:1976, which is in agreement with ISO.2919 (see overleaf for definition and description of tests)

Amersham

registered in England and Wales 1002610 registered office Amersham Place Little Chalfont Buckinghamshire HP7 9NA

Run 6 — Beam on target

Start 19:21
Stop 19:23

Superheat Pressure:
Tup : -8.5
Tdown : -9.6

Camera is scintillating a lot
0.4 μA of beam on radiator CW

Run 7
start 19:27
stop 19:30

beam current
0.4 μA × ~~0.02~~ 0.02 tune
8×10^{-3} μA
= 8 nA

Run 8
0.4 μA CW on Faraday cup (1 meter down stream from radiator)
start : 19:40

Beam was off for a while
Run stopped at 20:10

~~Run 9 : Increased Npeak from 5 to 15~~
~~& current on FC from~~

~~Run 9~~
20:12 Lost beam. γ-ray interlock glitch
North linac down.

20:16 North linac coming up. wait 10-15 min.

Run 9

Start Time : 20:32

Beam current = 0.4 μA on FC

Npixel increased from 5 to 15

Stop Time : 20:40

By increasing Npixel to 15 we never catch the event at ~~the~~ its originating point, but only after ~~the~~ the bubble has travelled for some time.

So we go back to Npixel = 5

Run 10

I = 10 nA on F.C.

Start time : 20:49 ; Stop : 20:50

Beam went away!

Run 11

I = 4.5 μA on FC

Start time : 21:02 , Stop : 21:03

Too many events!

9/11/2015

11:46 am

6 hrs

Lead shielding being installed around camera

Current in illumination for BC is 1.6 amps

Run 12 start 17:10 30 nA of beam on radiator
Stop 17:25 7.7 MeV
Countrate looks like bg.

Run 13 Start 17:26 I_e = 0.4 μA

A lot of scintillation on camera.
Improved from yesterday but still there.

Stop 17:46 Lost beam

changed recovery delay from 10 s to 5 s

Run 14 Start 17:50 beam back

Stop at 6 PM ; beam disappeared

Run 15 : Start : 6:02 PM, delay = 5 sec

Stop : 6:23 PM , beam went away!

Run 16 : Start : 6:24 PM , delay = 5 sec

Stop : 6:40 PM

The time that we record & the one recorded by the archive is exactly the same.

Run 17 : Start : 6:43 PM , delay 5 sec.

Stop : 6:48 PM , beam gone.

Run 18 : Start : 6:49 PM

Stop : 7:00 PM

:06 Energy = 8MeV
I = 0.4 nA

Here we see
1 good event every
1 s

Dump
No superheat
control box enabled

Run 19 Start 20:08
Stop 20:13

Ignore!

Run 20 Start 20:14
Stop : 20:17, beam gone.

Run 21 Start : 20:18
Stop : 20:27, beam gone

Run 22 Start : 20:28, beam gone
20:34

Run 23. Start : 20:35
Stop : 20:49, beam gone

Current reduced to 40 nA!

Run 24 : Start : 20:55

Now we see 1 good event every 10s

Stop : 21:01

Run 25 : Start : 21:01
Stop : 21:08

Run 26 : Start : 21:09
Stop : 21:09 beam gone

Run 27 : Start : 21:10
Stop : 21:18

Run 28 : Start : 21:19
Stop : 21:22

Run 29 : Start : 21:23
Stop : 21:27

Run 30 : Start : 21:41

Now we are in the experimental hall and reducing the chamber pressure to 300 psi from 325 psi

Stop : 21:44

Run 31 : Start : 22:09 Current = 35 nA

Event every 1 sec ⇒ we see (γ, p)!

Stop : 22:11

Run 32 : Start : 22:13
Stop : 22:29

Run 33 : Start : 22:30
Stop : 22:36

Run 34 : Start : 22:37
Stop : 22:41

Run 35 : Start : 22:42
Stop : 22:53

Run 36 : Start : 22:54
Stop : 23:08

Total events
143

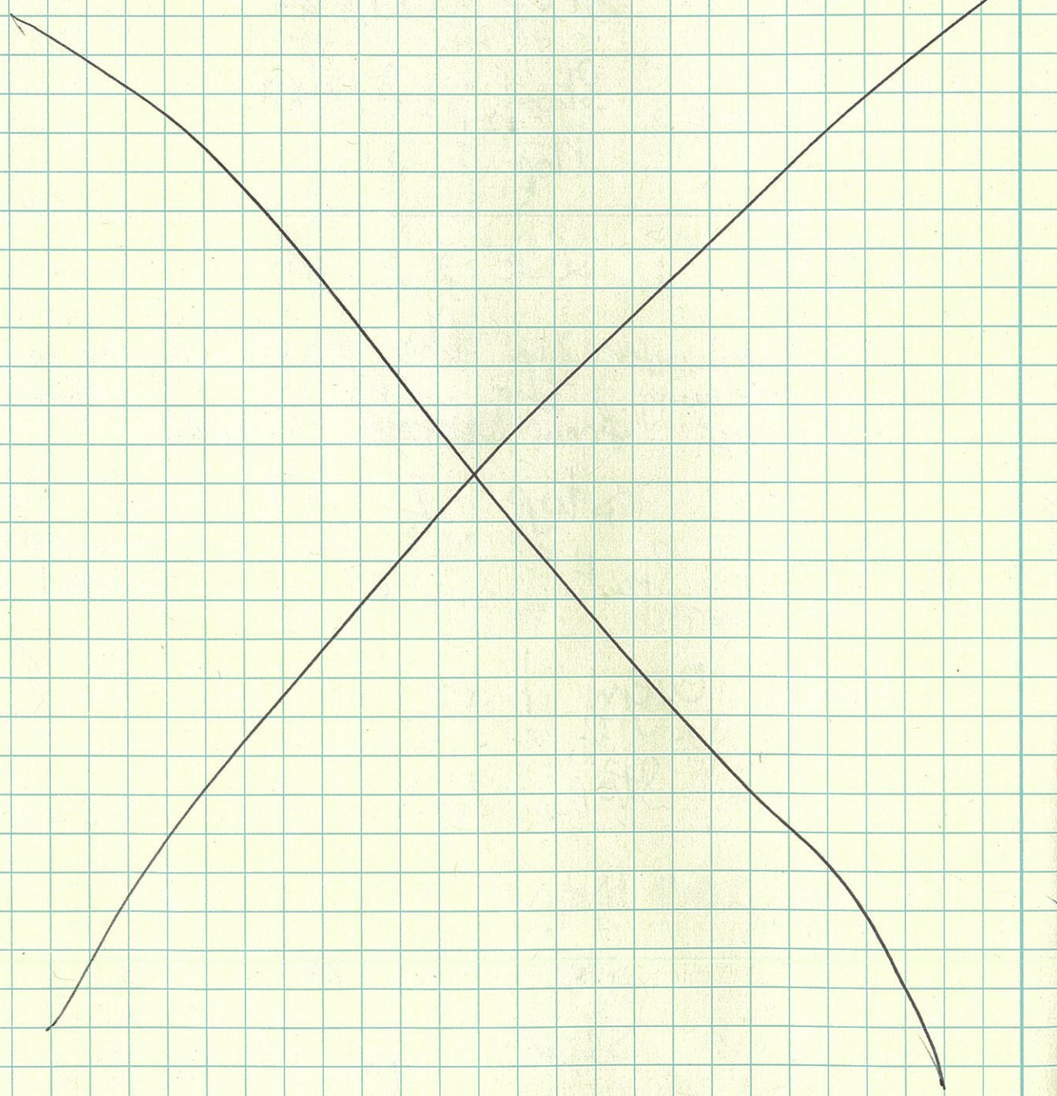

09/12/2015 13 hrs Start w/ 300 PSI

Run 37 : Start : 9:32, I = 0.4 μA
Energy = 8 MeV
Stop : 9:33

Run 38 : Start : 9:34, Stop = 9:41

We want to reproduce last night's run, so we ↓ the current to 35 nA

Run 39 : 9:42 → Start, I = 35 nA
E = 8 MeV
Stop : 9:52, beam gone!

Run 40 : 9:53 → Start. Events = 165
Stop : 10:10

Run 41 : Start : 10:11 Events = 285
Stop : 10:22

Run 42 : Start : 10:23 Events = 64
Stop : 10:29

Run 43 : Start : 10:30 Events = 62
Stop : 10:37

Run 44 : went down to experimental hall & changed pressure to 310psi , I = 35 nA, E = 8 MeV

Run 45 : Start : 11:05 Events
Stop : 11:10 34

Run 46 : Start : 11:11 Events
Stop : 11:20 65

Run 47 : Start : 11:21 Events
Stop : 11:28 57

Run 48 : Start : 11:29 Events
Stop : 11:40 89

Run 49 : Start : 11:41
trips at 11:44 and 11:47, 11:52
Stop : 12:02

Run 50: Pressure Change 325 psia
Access experimental hall

Run 51: Beam Position scan
Orig. Position - centered (58, 50 Gcm)
35 nA Beam Trip
Start : 12:59 Scrapped - No events!
Stop 13:06 Too low current!

Run 52: Orig. position (58, 50 G·cm)
P: 325 Start : 13:08 35nA
~ Distrim Stop 13:11
320-330 Current too low to see only γ, α ⊗ increase current

Run 53: Still orig. Pos. (58, 50 G·cm)
P 325 Start : 13:12 .4 nA
distr Stop : 13:22
320-330
Stopped - current too high - camera Noise, Not enough good events, back to low current.

Run 54: I = 40 nA, E = 8 MeV Stop : 13:29
Start : 13:24 ; we see 1 event & every 50-60 sec.
For run 27, where the experimental conditions were the same as Run 54 however when we checked the log, Run 27 showed Pressure of ~ 312-315 psi & Run 57 showed ~ 322-325 psi, so we went to the Experimental hall to reduce pressure to ~ 315 psi.

Run 55 Test run Dump data
Beam back
14:41 I_e = 38 nA P = 315

Run 56 start 2:43p Event rate too
Stop 2:45p low.

Riad said beam may be 2mm off center. Adjusting ...

Beam centered. He went to original position

Ie = 40nA

Run 57 start ~~14~~ :52

Lost beam 1 minute
Stop 15:03

The Labview computer seems to be acting strange.

[Reboot Labview]

Run 58 Start 15:12

System ~~trigger~~ sometimes randomly with no bubble inside the "lifter" after steel is about 0.5s. ~~after~~
This noise comes and goes randomly

Run 59 Test (Increased frames to skip from 30 to 50 ~~to~~ to wait for pressure overshoot to become stable)

We decided to go up in pressure (~320 psi or a little more). This will allow us to suppress HM(x,p) and look only at (x,x'). Bad will use the accumulator to try to stabilize pressure after decompression.

Frames skept for decompression back to 30 (Labview)

Run 60: went to esp. hall & changed pressure to 325 - 330 psi

Run 61: I = 0.4 μA, E = 8 MeV
Start : 17:25 Events = 473
Stop : 18:25

~~Beam off~~

Now we shift beam to extreme left (~ 4mm):

Run 62: Start : 18:26
Stop : 19:26

Shift beam to right by 5mm

Run 63 Start 19:28 Events
Stop 20:28 =332

Run 64: Moved beam down by 6 mm

Start: 20:29

Stop: 21:27

Run 65: Move beam up 4 mm

Start 21:28 Events

Stop: 22:28 508

Now we get the beam back to its original position

Run 66: Start 10:33, Stop: 10:35

Increasing current from

0.4 μA → 10 μA (slowly)

It doesn't look too bad!

Tommorrow we will add some more lead sheets around the camera

09/13/2015 7 hrs

9:30: We went down to the experimental hall & added more lead shielding around the camera.

From yesterday's test it seems the upper left position for the beam gives most events in the fiducial volume!

Run 67: Start: 11:15, Stop: 11:18

I = 9 μA, we still see lot of radiation! (running with no superheat condition)

Now we shift the beam up by 4 mm & increase current to 10 μA

Run 68: Start: 11:25 (No superheat)

Stop: 11:33

Run 69: Start: 11:34 (with superheat)

Stop: 11:44

Since, there a large flux of gammas hitting the camera & producing scintillations, we see only 1 ~~out~~ good event amongst 15 events recorded!

Brad suggested that we could turn up the LED light to max & adjust shutter, gain etc. of the camera to saturate the view field with light. We think that under this condition any scattered gammas getting into the camera will not generate any diff. image since the field of view is already saturated. Only when the bubble will be formed, the image will be darker at that location, & hence we will detect it in the difference image!

Orig. Camera Values in Software

Brightness: 765

Frame Rate: 1000

Gain: 45

shutter: 45

Run 70

Camera Setting adjustments

Shutter 112 - a little better

	Orig.	New
Left	115	157
width	465	423
Top	82	122
Height	322	242

Increase Shutter time to 200

Shutter	160	too	saturated
Shutter	140	too	saturated
Shutter	120	too	saturated
Shutter	100	too	saturated Not seeing bubbles in center

No Dice

Back to ~~[illegible]~~ BP settings from Previous Run

STOP 12:18

Run 71 : Start : 12:19 PM, $I = 0.4\,\mu A$ $E = 8$ MeV, beam position is the upper position

Stop : 12:27 pm ; lost beam

Run 72: Start : 12:43 PM

Stop 13:44 PM

390 events

Beam tripped ~3 times

4:41 We changed beam energy to 6.5 MeV, I = 1 μA

Run 73: 14:42 → Start

Stop → 15:42

Events 344

Run 74: E = 6.5 MeV, I = 10 μA

Start: 15:43

Stop: 16:19

Run 75: E = 4 MeV

I = 10 μA

Start: 17:47

Stop: 18:37

124 events

14 Sep 2015

Run 76 System ✓ + pressure ✓

B.D. Upon startup a large bubble stirred active volume - expect higher than normal background

Run 77 Background Run

See note from run 76. This may not be a good background run.

Start 10:39

Stop 12:04

141 events

E = 8.5 MeV, I = .4 μA

Run 78: Start: 15:30

Rate = 1 every 15-20 sec

We see very very few events in the fiducial volume, it seems the beam is not centered, so we are going to play with the beam position.

Stopped: 16:06

We moved beam down by 3 mm

Run 79: Start: 16:11, Stop: 16:15

I = 0.4 μA Rate = 1 every 15 - 20 sec

But we saw ~1 good event in the fiducial volume in 2 minutes

So we will go to another beam position

Now beam is up by 3 mm

Run80 : Start : 16 : 19 $I = 0.4\,\mu A$

~ 4 good events in fiducial Volume in 7 mins,

Rate 1 every 20 - 25 sec

Stop : 16 : 27

Beam left by 3 mm

un81 : Start : 16 : 31 , $I = 0.4\,\mu A$

~ 9 good events in fiducial Volume in 5 mins

1 good events every 8 - 10 sec

Stop : 16 : 40

Beam left by 5 mm

Run 82 : Start : 16 : 45 , $I = 0.4\,\mu A$

8 good events in fiducial volume in 4 mins

1 good every 7 - 9 sec

Stop : 16 : 52

Beam right by 3 mm

Run 83 : Start : 16 : 53

6 good events in fiducial Volume in 5 mins.

1 good every 7 - 10 sec

Stop : 17 : 01

It seems left by 5 mm is the best position. So now we will put beam at left by 5mm & at that position try up & down.

Beam left = 5 mm, down = 3 mm

Run 84 : Start : 17 : 03 , $I = 0.4\,\mu A$

Stop : 17 : 06

There was a burning smell, we had to leave the building

Run 85 : Start : 19 : 07 , $I = 0.4\,\mu A$

Stop : 19 : 10

The pressure was b/w 339 - 345 psi.

So we stopped the run & went to the

Run 86 : Test run for pressure

Pressure : 325 - 335 psi

light output of LED increased to 1.8 amps.

Run 87 : Start : 19:56 Stop: 19:59

I = 0.4 μA

3 good events in fiducial volume in 3 mins

Beam left 5mm, up = 3mm

Run 88 Start : 20:02 , I = 0.4 μA

Stop : 20:04

1 good event in fiducial volume in 2 mins.

So we decide beam left by 5 mm is the best we can get, so we run at that beam position ⇒

horizontal : -5 mm , vertical = 0 mm.

Run 89: Start : 20:07 , I = 0.4 μA

Stop : 22:59 , Events = 1520

9/15/2015

Run 90 : Went into Exp. hall. Test run. Background run

Run 91: Start : 15:14, Background run.

Junk!

Huge background

Run 92 } Pressure Test Run
Run 93 }

Now Pressure = 343 ps

background ~ 16-25 sec

we'll put beam on the chamber & see.

Run 94 : Start : 17:37 , I = 0.4 μA

Stop : 18:37 E = 8.5 MeV

Run 95 : Start : 18:38 I = 4 μA

Stop : 18:39 ⇒ too many bad events/scintillations

Run 96 : Start : 18:40 , I = 2 μA

Stop : 18:45 , still lot of scintillations.

Run 97: Start: 18:46 I = 1.3 μA
Stop: 19:17 Events = 130

~~Run 98: Test~~

09/16/2015

We decided to vent and refill the bubble chamber, since yesterday we saw too many background events. This time we have more Hg droplets on the glass surface!

Run 98: Test run while filling the bubble chamber.

Run 99: 3hr settle time after fill
Setup for background run.

Temperatures + Pressures Setup

RTD Controller Readings	-7.2 up	-7.5	Labview Readings
	-8.6 down	-8.9	

Pinner 335 - 322

Rate seems a bit higher than initial fill + background run but still achieving live times up to 120 sec - Much better than last night!

Run 100 Background Run w/ New fill
More Hg on glass than 1st fill....
Start 13:57
Stop 14:58
77 events

E = 8.2 MeV, I = 0.4 μA

Run 101: Start: 16:42 Events = 1063
Stop: 19:02

Did a 1 min junk run by mistake w/ run # 101 also

Run 102: started: 19:04 Events ~~100~~ 86
Tuning beam run stop: 19:17

This run was taken during tuning for 7.6 MeV
No beam until the last minute or so of the run.

E = 7.6 MeV I = 1 μA

Start: 19:22 Events: 98
Stop: 19:34

Run 104 : E = 7.6 MeV, I = 2 nA

Start : 19:36

Stop : 20:13

The event rate is 1 every 1-2 sec.
It seems high, so we will take
a background run.

Run 105 : Start : 20:15, No beam

Stop : 20:30,

Events : 126

Run 106 : I = 1 μA, Events = 586

Start : 20:31

Stop : 21:31

Run 107 : No beam Events = 256

Start : 21:32

Stop : 21:57

7/17/2015

Run 108 : Test run while venting &
filling chamber with N_2O

Run 109 : Test to set the right
pressure

Run 110 : Background run, no beam

Start : 13:46 Events = 119

Stop : 14:37

To test the position of the beam
spot we put clear/transparent rulers
behind & in front of the collimator!

Run 111 : Start : 14:43 E=7.6MeV, I = 1 nA

To test the beam spot position.

Stop : 14:53 Events = 54

The beam current was too low to get
any beam spot! will try next time with
x-ray film.

Run 112 : Start : 15:13, Backgnd. run

Stop 15:26

35 events

Run 113 : E = 7.6 meV, I = 1 μA

Start : 15 : 31

Stop 16 : 32

421 events

Run 114 background

Events = 201

~~Start : 16 : 33~~ BD

Start : 16 : 33

Stop : 17 : 03

Run 115 : I = 1 μA

E = 7.6 meV

Events = 271

Start : 17 : 05

Stop : 17 : 35

Run 116 : No beam → background

Start : 17 : 36 Events = 264

Stop : 18 : 06

18 sep 2015

Run 117 System setup

Run 118 : Start : 9 : 31 Backgnd.

Stop : 10 : 03