Gun Magnet Design

December 27, 2015

Magnetized Gun

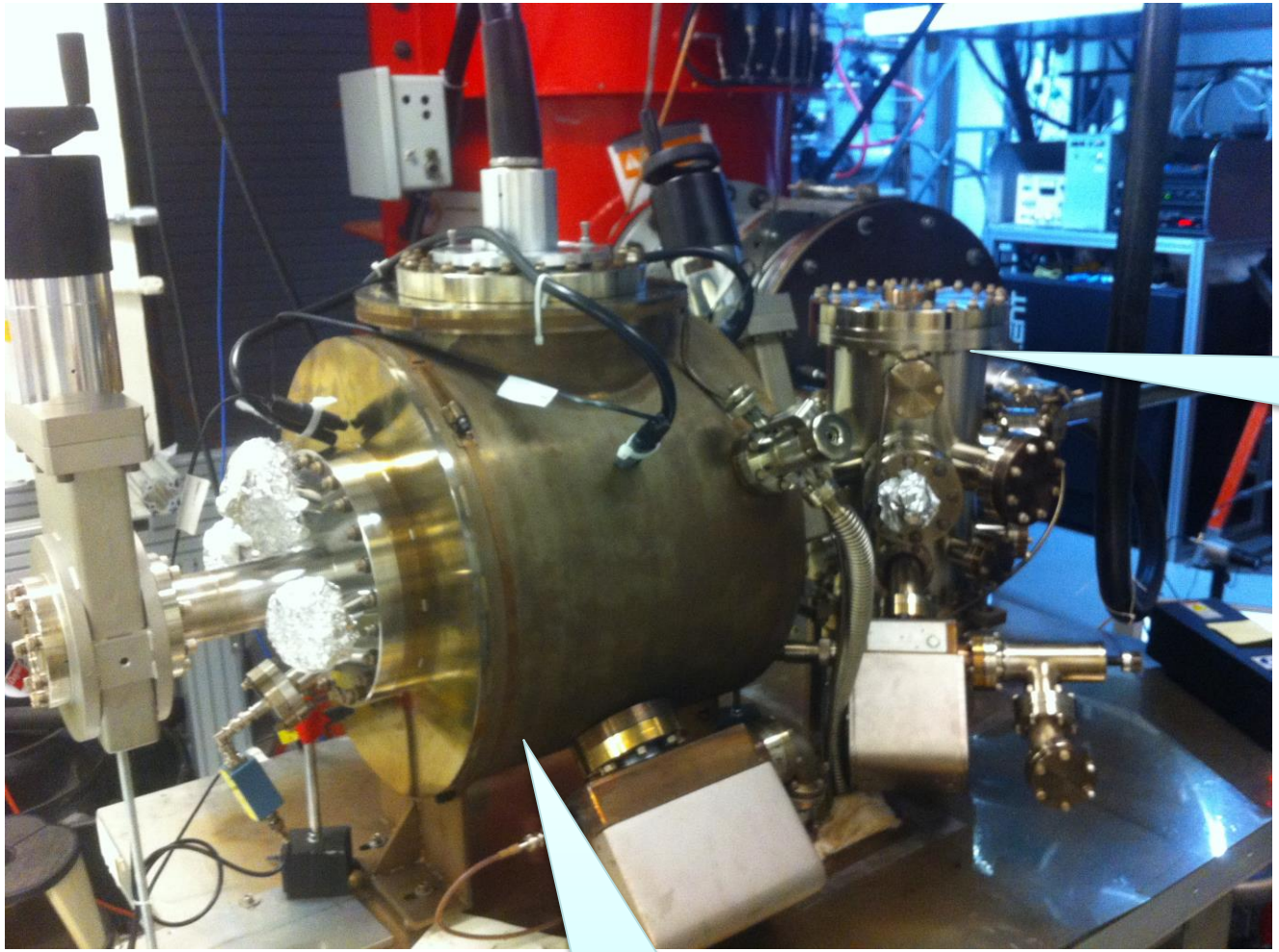

Magnetic Field at Cathode

Beam radius	0.3 cm
Field at cathode (B_z)	2 kG

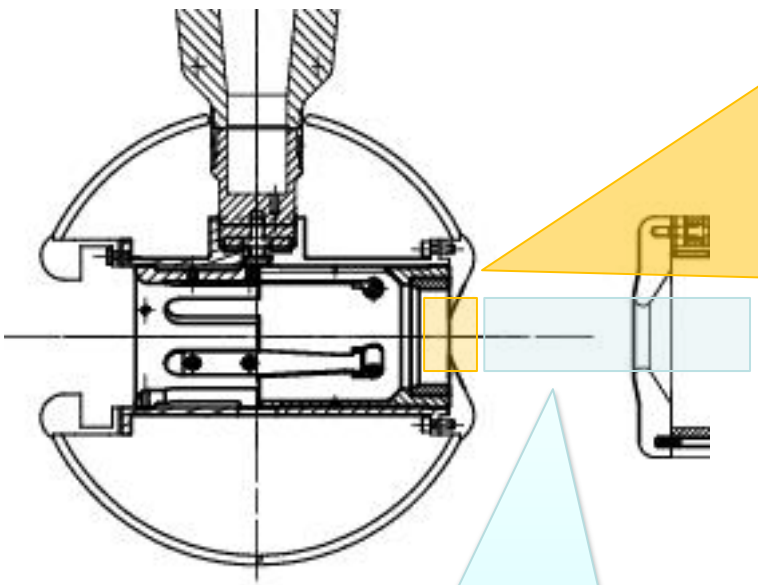

B_z,B_r: relevant to beam transport

Magnetization field:

- Along z:
  1. B_z = 2 kG
  2. Varying slowly to be able know value from S&A
- Along r:
  1. Photocathode: ø 1.3 cm
  2. Uniformity: $\frac{\delta B_z}{B_z}$ <?

HV Chamber

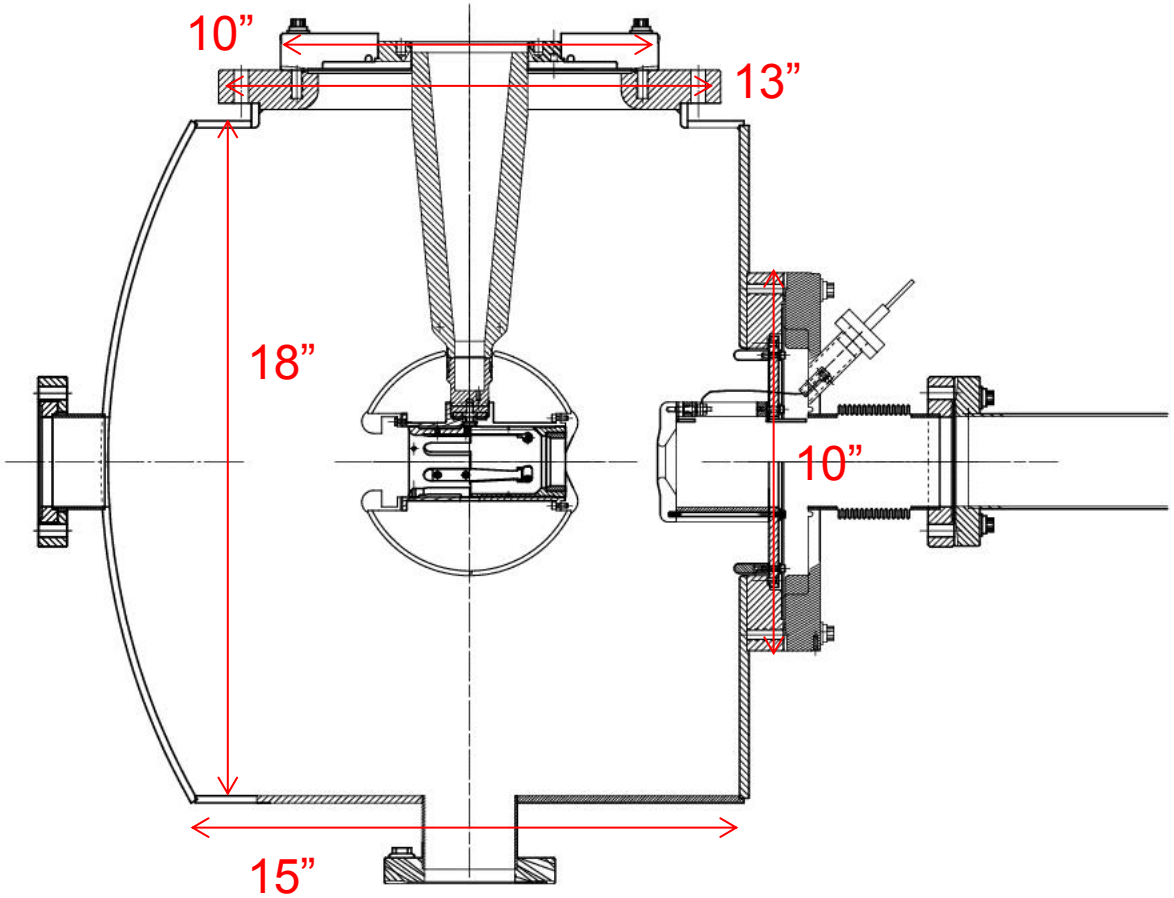

HV Chamber Clearance

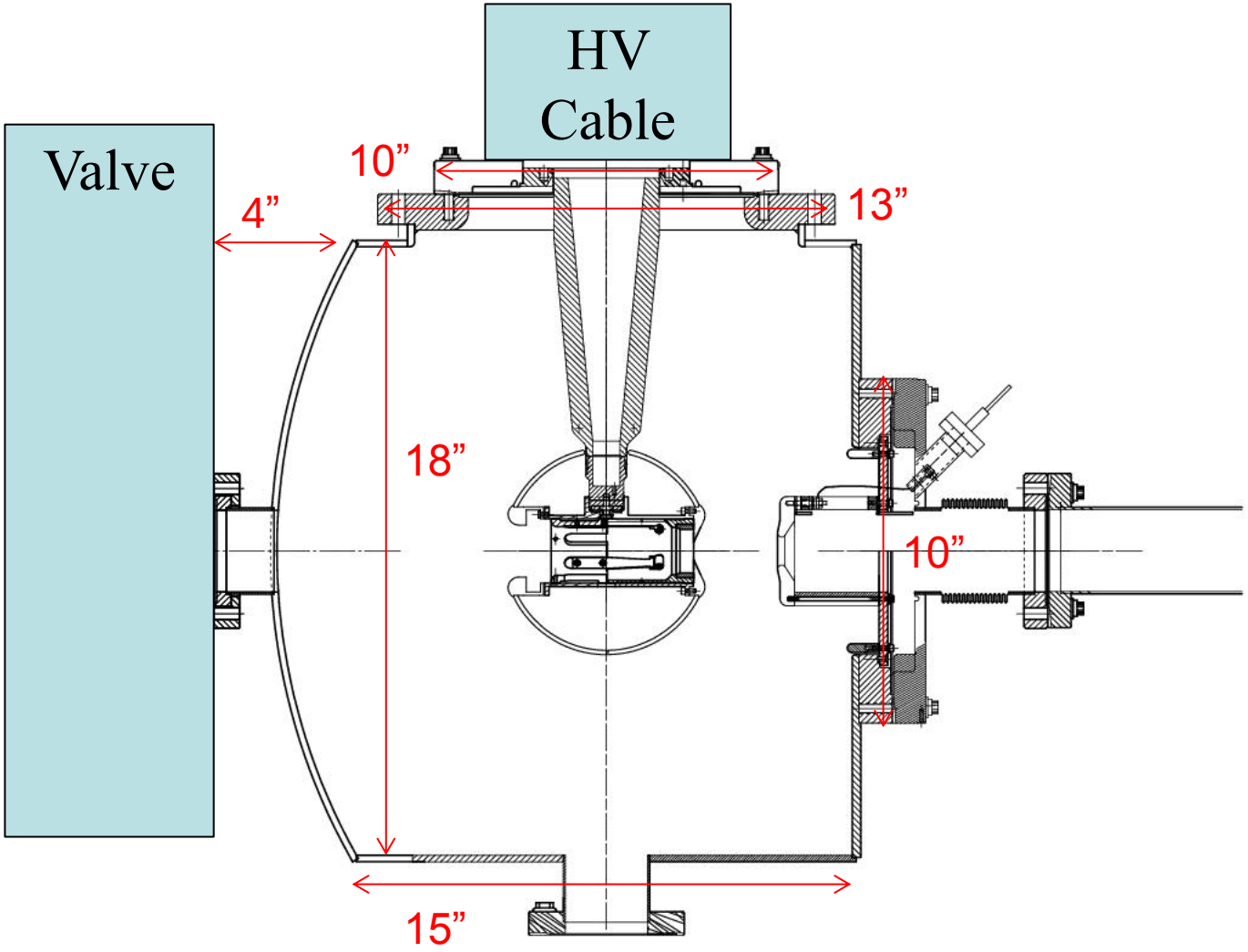

Design 1: Helmholtz Pair

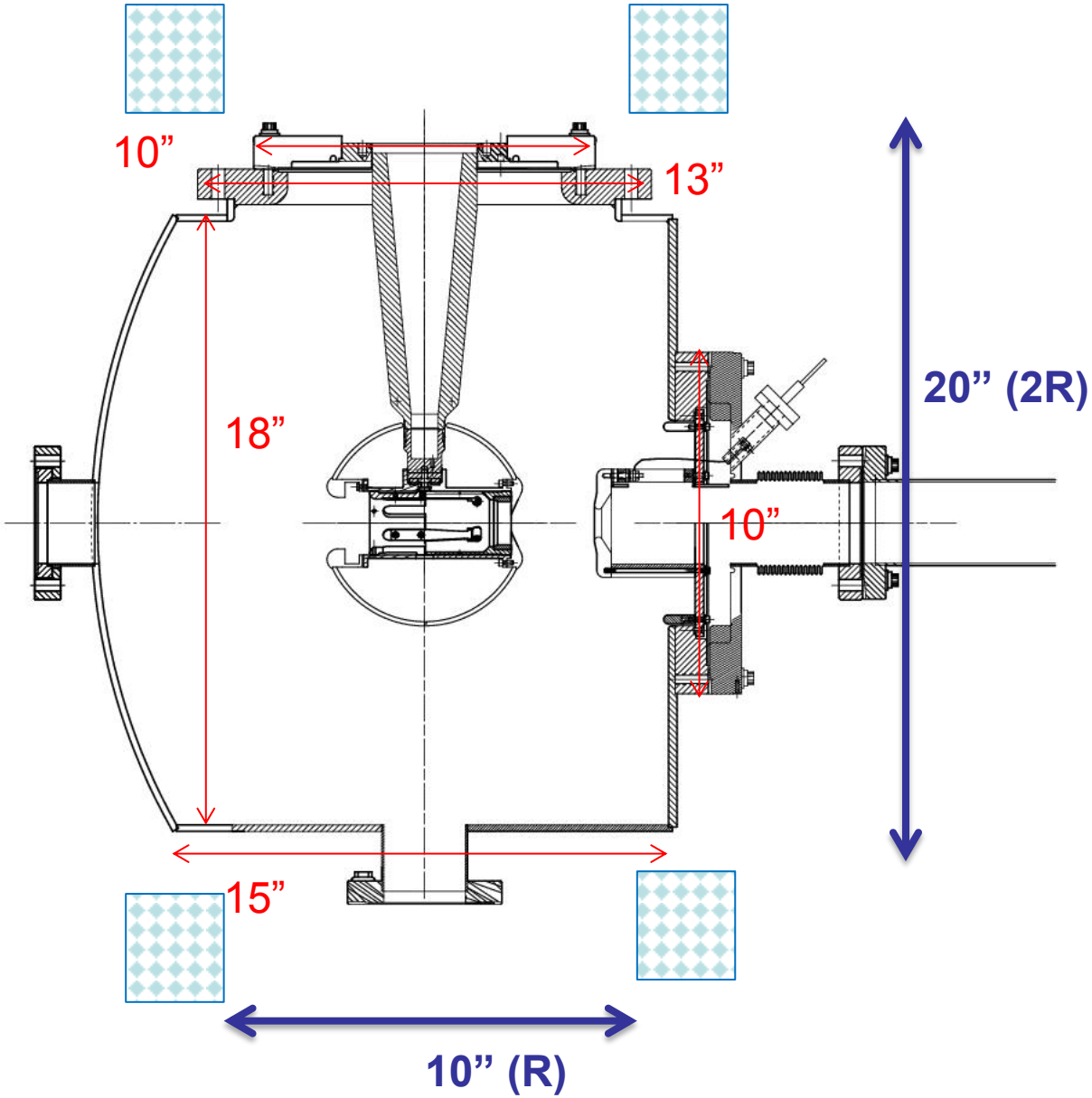

Design 2: Two coils (Lousy Helmholtz)

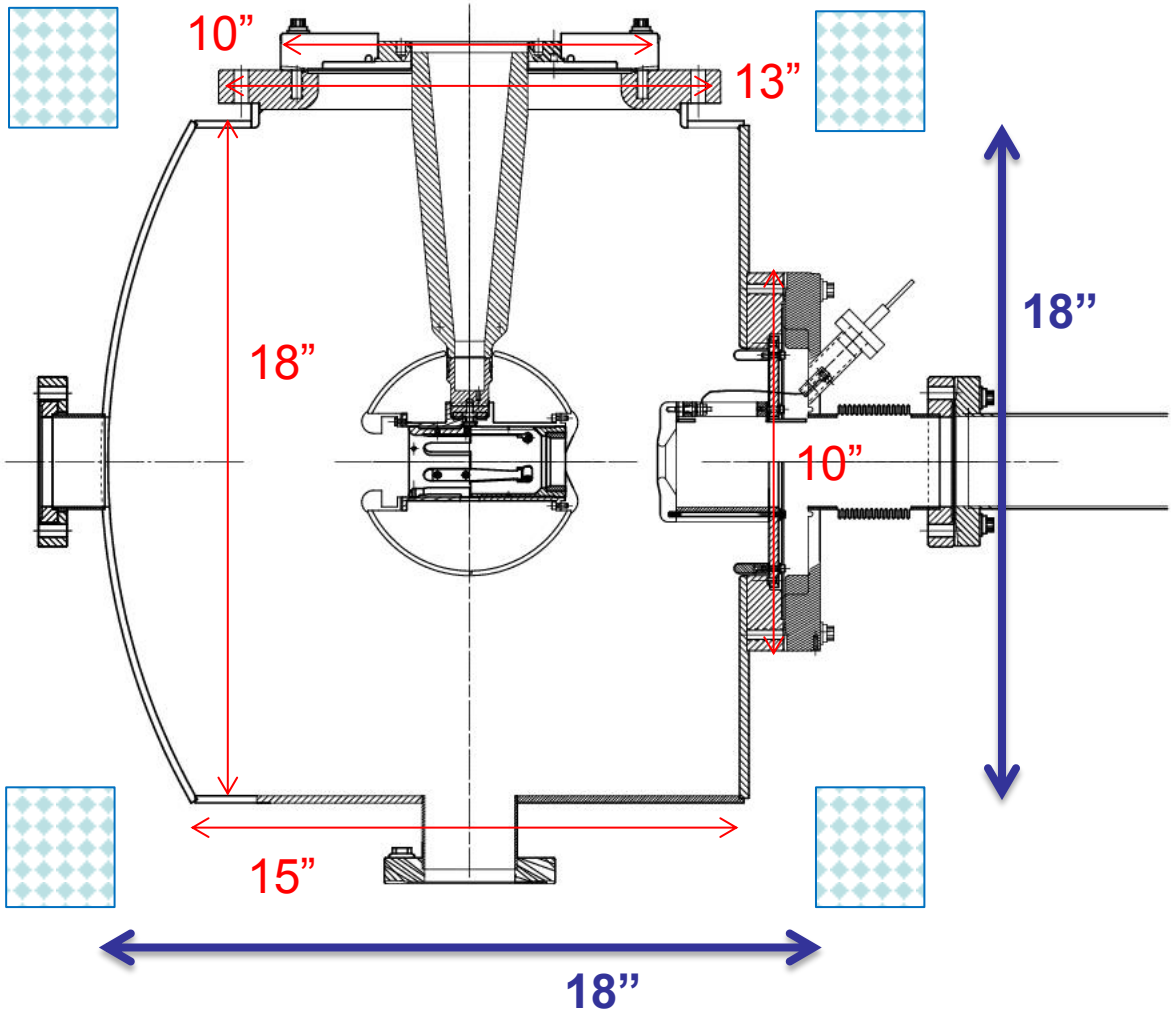

Design 3: One Coil + Steel Puck

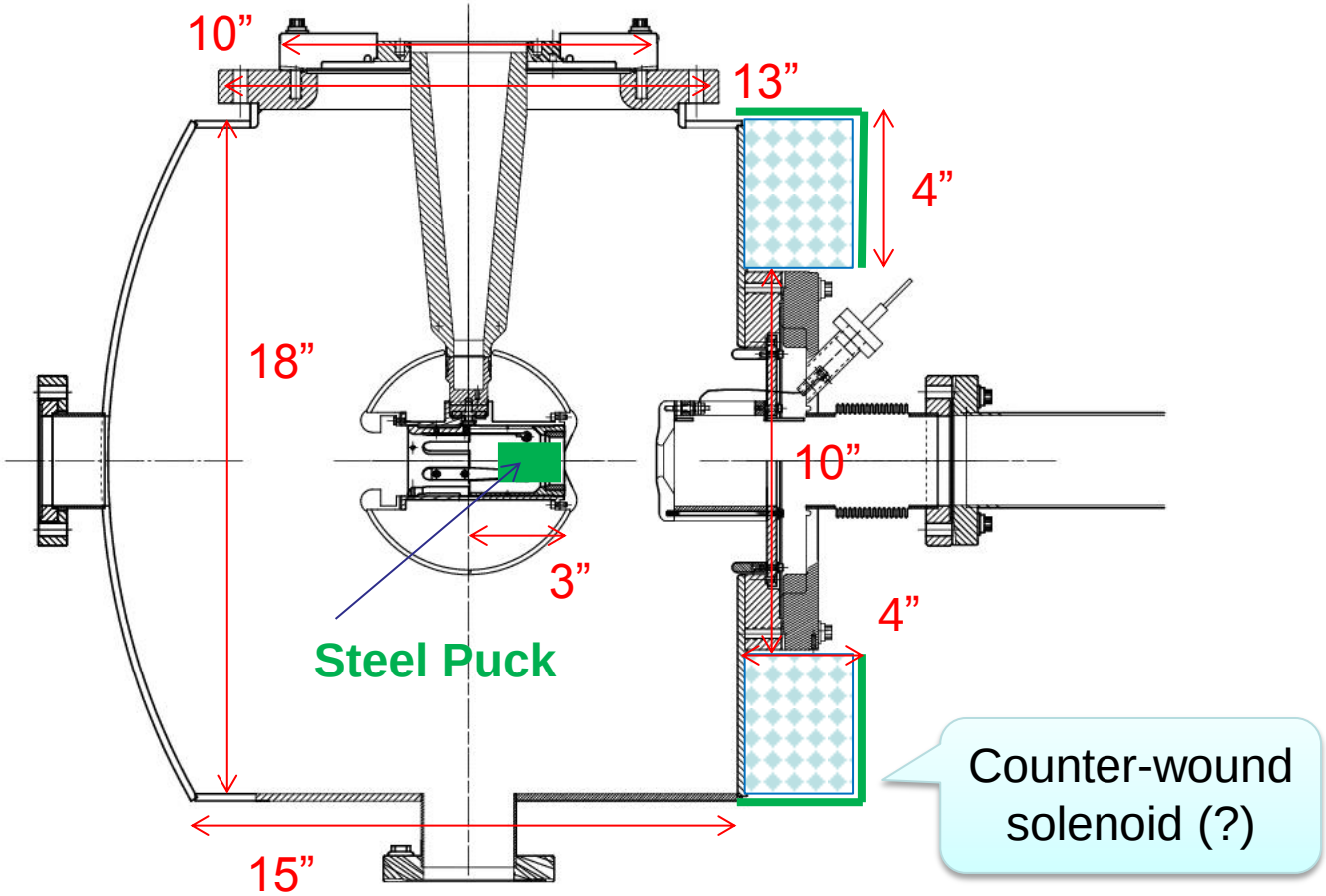

B_z vs z

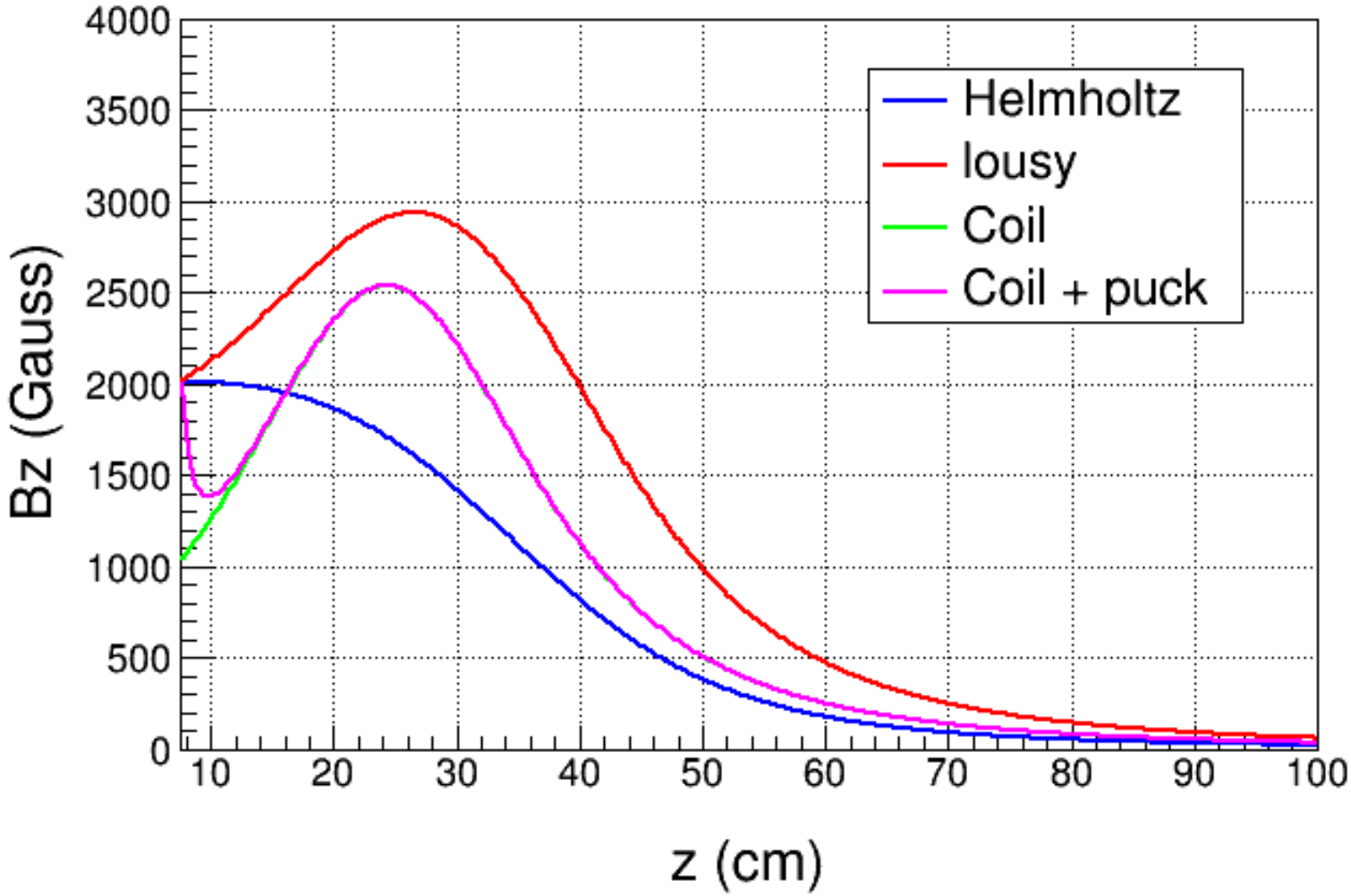
Helmholtz
lousy
Coil
Coil + puck
Bz (Gauss)
z (cm)
0
500
1000
1500
2000
2500
3000
3500
4000
10
20
30
40
50
60
70
80
90
100

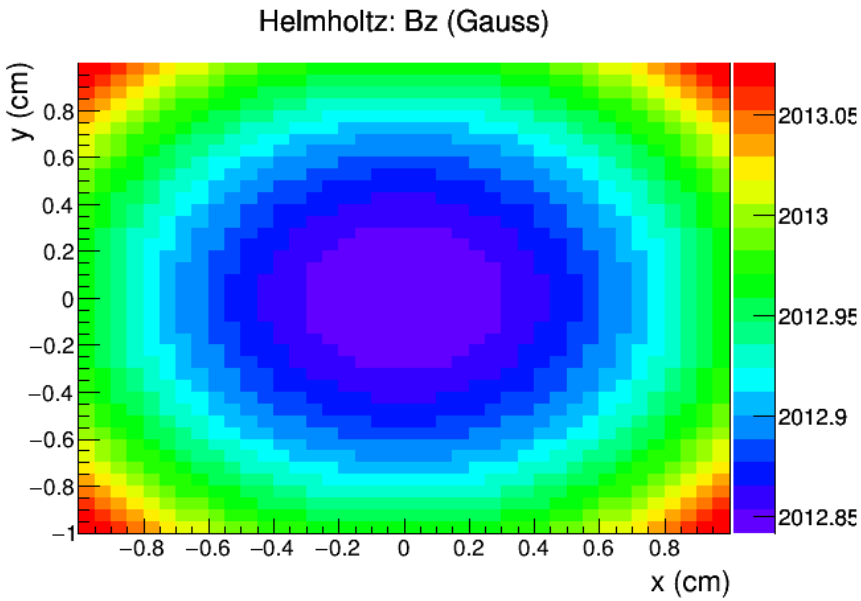
Helmholtz: Bz (Gauss)
y (cm)
x (cm)
2013.05
2013
2012.95
2012.9
2012.85

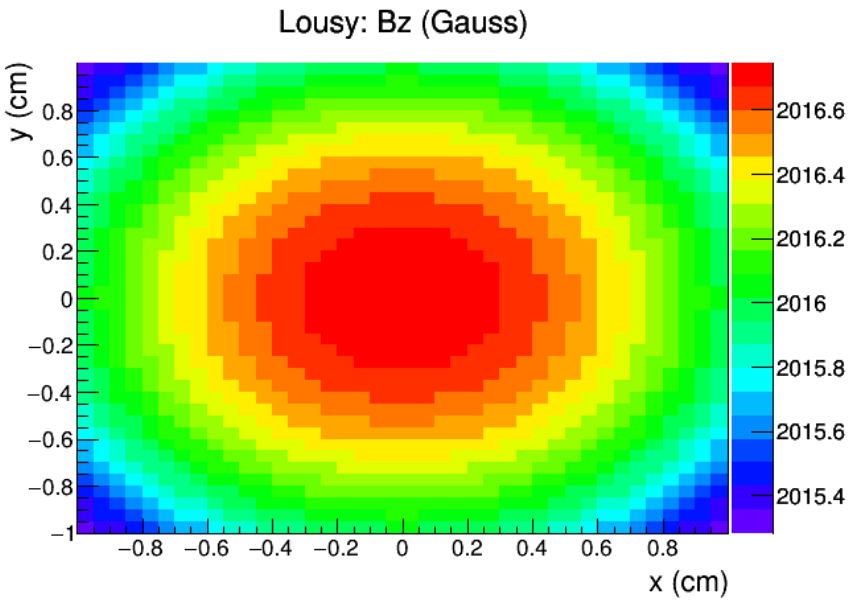
Lousy: Bz (Gauss)
y (cm)
x (cm)
2016.6
2016.4
2016.2
2016
2015.8
2015.6
2015.4

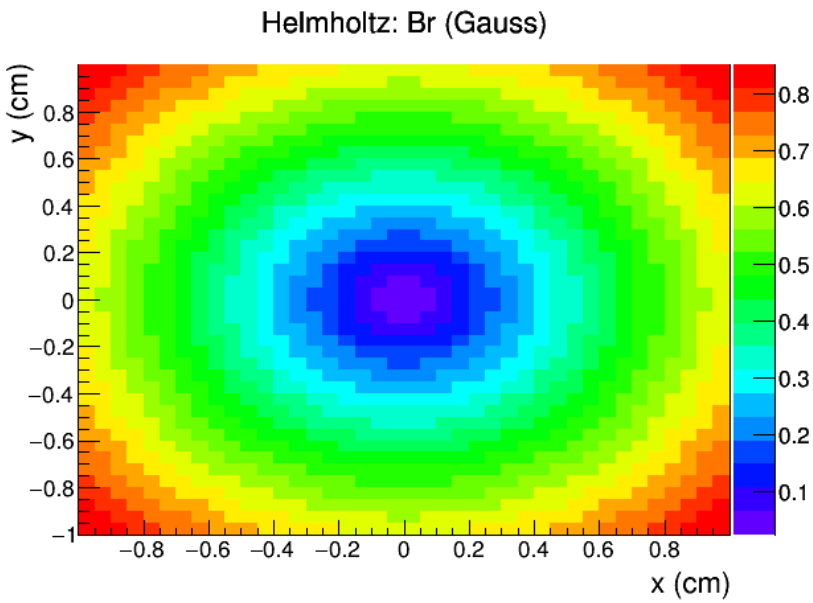
Helmholtz: Br (Gauss)
y (cm)
x (cm)
0.8
0.7
0.6
0.5
0.4
0.3
0.2
0.1

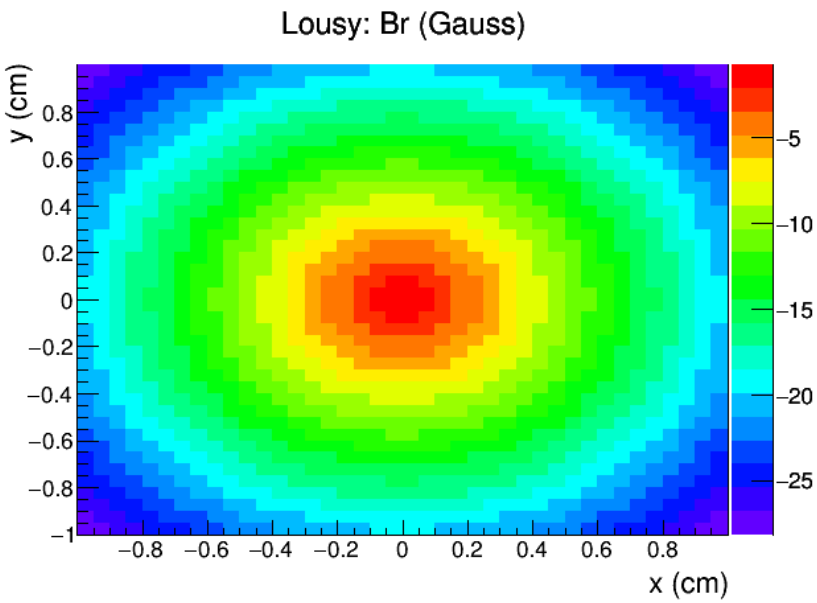
Lousy: Br (Gauss)
y (cm)
x (cm)
−5
−10
−15
−20
−25

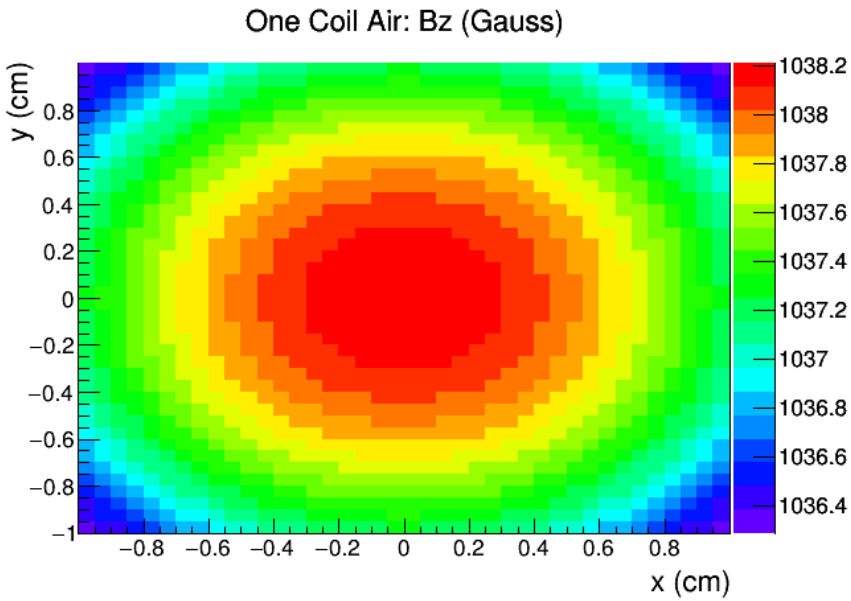
One Coil Air: Bz (Gauss)
y (cm)
x (cm)
1038.2
1038
1037.8
1037.6
1037.4
1037.2
1037
1036.8
1036.6
1036.4

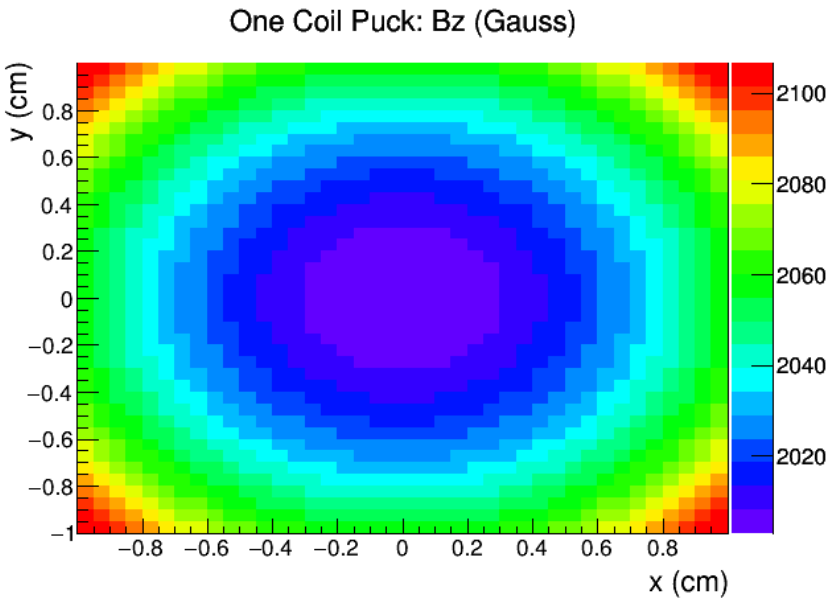
One Coil Puck: Bz (Gauss)
y (cm)
x (cm)
2100
2080
2060
2040
2020

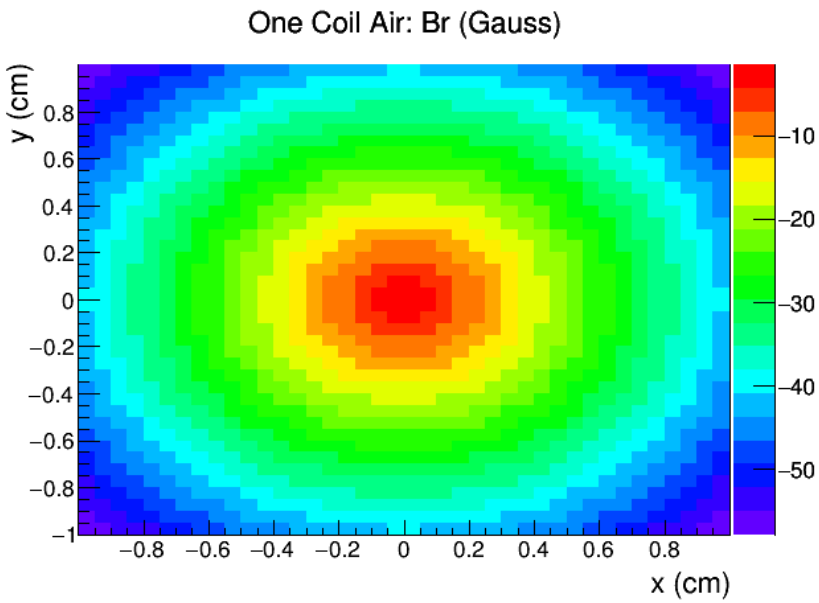
One Coil Air: Br (Gauss)
y (cm)
x (cm)
−10
−20
−30
−40
−50

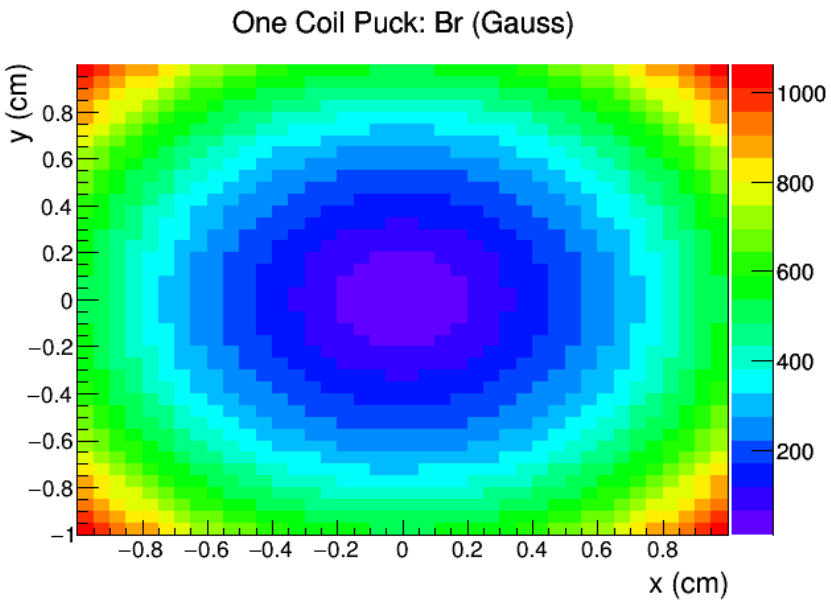
One Coil Puck: Br (Gauss)
y (cm)
x (cm)
1000
800
600
400
200

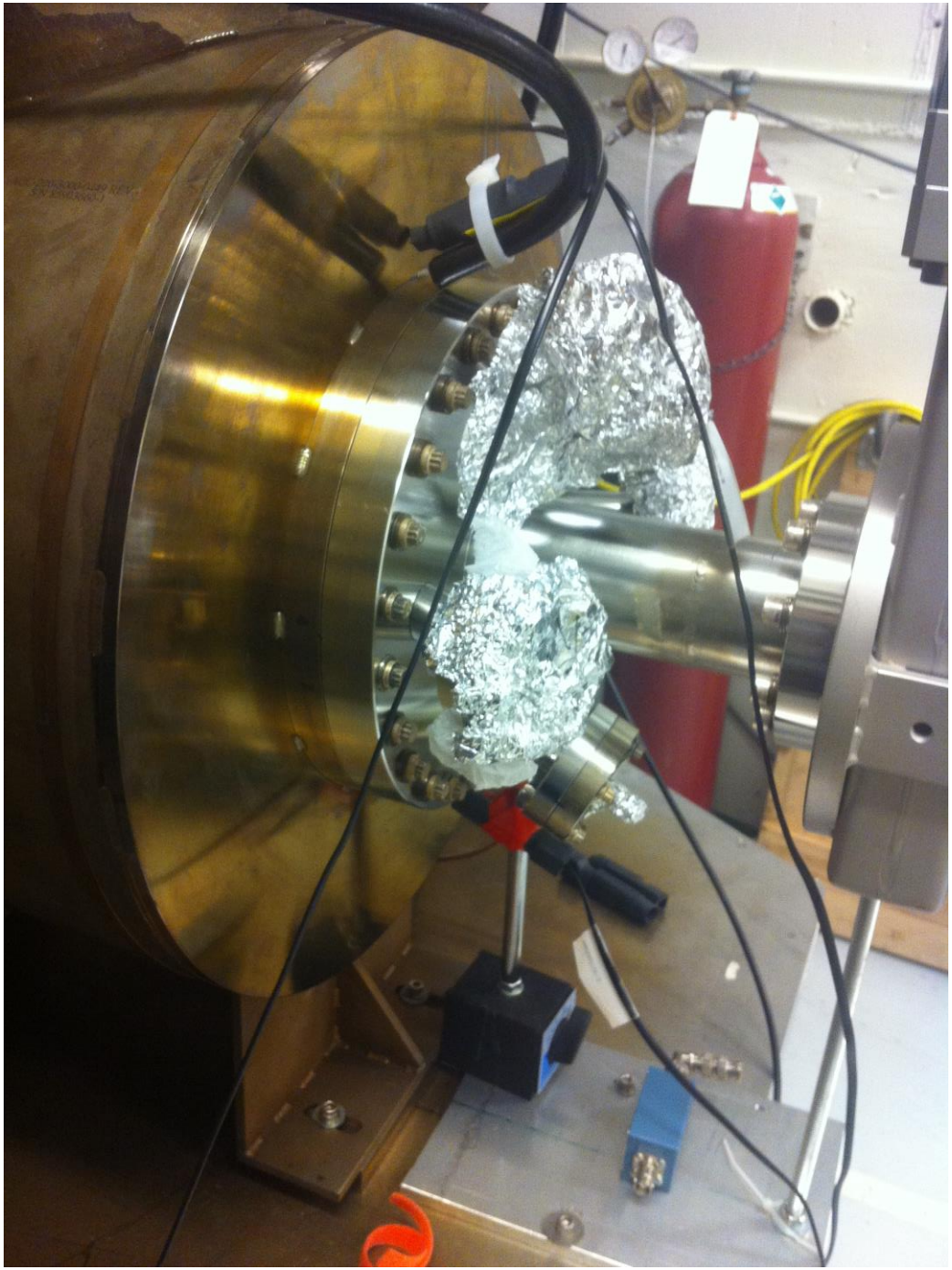
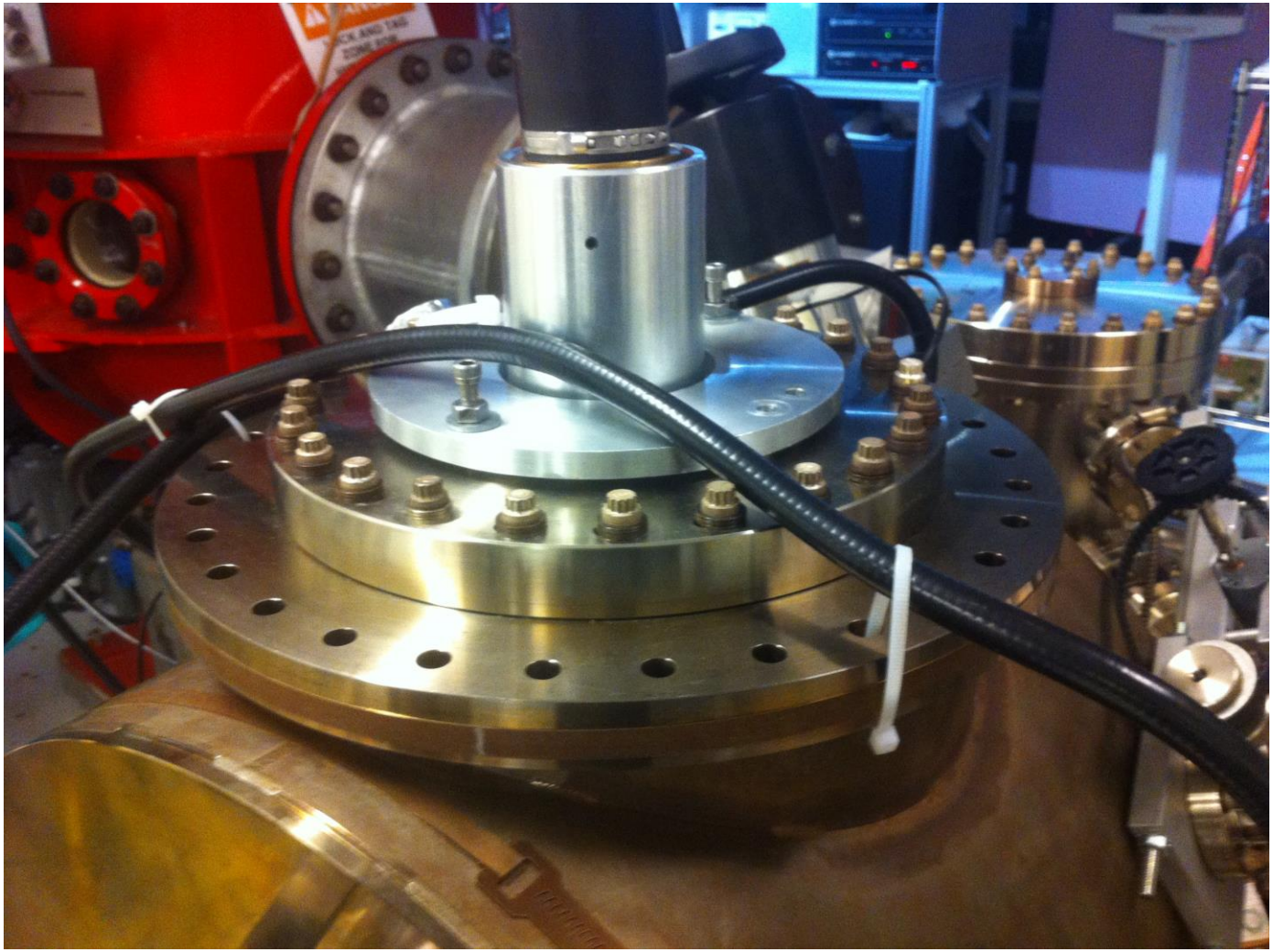
garage
Sb