INSTRUCTION MANUAL

OS SERIES

SERIAL #: N414077 – 01
MODEL: PS/OS450N3.0JY1
DATE: 5-20-14

Innovations in high voltage power supply technology.
GLASSMAN HIGH VOLTAGE INC.
124 West Main Street, PO Box 317
High Bridge, NJ 08829
*(908) 638-3800 * FAX (908) 638-3700 * www.GlassmanHV.com*

Glassman High Voltage, Inc.

Power Supply Test Data Sheet

Model PS/0S450N3.0SY1 Serial No. N414077-01

I. Preliminary Mechanical Inspection ..... ✓

II. Preliminary Electrical Check ..... ✓

A. Reference Voltage ..... 10.00 V

B. Maximum Output Voltage (No Load) ..... -450.0 KV

C. Maximum Output Current ..... 3.0 mA

D. Switching Frequency ..... 40 KHz

E. Stability ..... ✓

F. Dropout ..... 171 VAC

III. Control Functions

A. Voltage Program Linearity 10.00 v = 450.0 kV; 1.000 v = 45.00 kV; 0v = .01 kV

B. ΔV: Voltage Program / Voltage Monitor ..... 0.2 mV

C. Voltage Program Remote ..... ✓

D. Current Program Linearity 10.00 v = 100.0 %; 1.000 v = 9.99 %; 0v = 0 %

E. ΔV: Current Program / Current Monitor ..... 2.9 mV

F. Current Program Remote ..... ✓

G. Interlock ..... ✓ HV Enable ..... ✓

H. KV Meter ..... ✓ MA Meter ..... ✓

IV.

Data	Line V	Line Current	B+	Output V	Output I	Ripple vp-p		
	VAC	IAC	VDC	KV	%	Total	Line freq.	RF
Full Load	220	8.8	375	450	95	39	4	35
No Load	220	2	375	450	0	15	0.8	14.2
Current Limit	220	3.6	375	209	100	28	2	26
Short Circuit	220	1.1	375	0	100	0	0	0

V. Regulation: No Load – Full Load 10 v .....Line 198 - 264 VAC <15 v

VI. Burn – In ..... 1 Hours

Technician Jim Retro Date 5-20-14

Glassman High Voltage, Inc.
124 West Main Street
PO Box 317
High Bridge, NJ 08829
Telephone: (908) 638-3800
FAX: (908) 638-3700
www.glassmanhv.com

CERTIFICATE OF COMPLIANCE

Glassman High Voltage, Inc. certifies that this equipment was tested, calibrated, and meets its published specifications.

MODEL: PS/OS450N3.0JY1

SERIAL: N414077 -01

INSPECTOR: Laurie Bayfield

DATE: 5-20-14

Glassman Europe Limited
21Campbell Court
Bramley
Tadley
Hampshire RG26 5EG
ENGLAND
Telephone: (01256) 883007
FAX: (01256) 883017

Glassman Japan High Voltage Limited
Green City Building
2-17, Utsukushigaoka 5-chome
Aoba-ku, Yokohama 225-0002
JAPAN
Telephone: (045) 902-9988
FAX: (045) 902-2268

TABLE OF CONTENTS
OS SERIES

Page

Warranty/User Registration Card ii

SECTION I - DATA

Specifications & Models ..... Booklet

CE Documentation (if applicable)
Declaration of Conformity (if applicable) .....
EMC Directive Addendum (if applicable) .....

Specification Control(s) (if applicable) .....

SECTION II - GENERAL INFORMATION

Unpacking & Inspection 2

Correspondence 2

Safety..... 3

Preparation For Use 4

Connectors, Controls, and Indicators
Front Panel, Remote Control Assembly 5
Front Panel, Driver Assembly 6
Rear Panel, Remote Control Assembly 6
Rear Panel, Driver Assembly 7
HV Stack Assembly 8

Installation and Operation 9

Remote Control and Monitor
Driver Assembly 11
Remote Control Assembly 11

SECTION III - SCHEMATICS AND MECHANICAL DRAWINGS

Declaration of Conformity

Declaration of Conformity
according to EMC Directive 2004/108/EC
and Low Voltage Directive 2006/95/EC

Manufacturers Name: Glassman High Voltage, Inc.
Manufacturers Address: PO Box 317
124 West Main Street
High Bridge, NJ 08829-0317
USA

Manufacturer declares that the **OS Series** Power Supplies conform to the following Product Specifications:

EMC:
EN 61000-6-4:2007, class A
CISPR 11, class A
EN61000-4-3:2005- 10V/m
EN 61000-4-5:2005 - +/2kV
EN61000-4-11:2005 – 30/60/90%
EN 61000-6-2:2005
EN 61000-4-2:2005 - 4kV CD, 8kV AD
EN 61000-4-6:2008 - 10V, 80% mod
EN 61000-4-4:2005 - 1kV Signal Cable, 2kV AC Mains

LV Directive: IEC 61010-1:2001 2nd edition

Environmental conditions:
Indoor use
Altitude up to 2000 meters
Temperature 5 deg C to 40 deg C
Humidity 80% maximum
Input Mains Fluctuations +/-10%
Installation Category II per IEC1010-1, paragraph 1.4 & annex J
Pollution Degree 2 per IEC1010-1, paragraph 3.7.3

Means of Conformity:

The product herewith complies with the requirements of the EMC Directive 2004/108/EC based on the use of Technical Documentation in accordance with Article 7, Annex III of the Directive.

The product herewith also complies with the requirements of the Low Voltage Directive 2006/95/EC based on design analysis and testing in accordance with Article 13, Annex IV of Directive.

Technical Documentation:

Prepared by:	Steven DeClario
Function:	Electrical Engineer
Company:	Glassman High Voltage, Inc. PO Box 317 124 West Main Street High Bridge, NJ 08829-0317 USA
TCF number:	98001OS
Date:	March, 1998
Updated by:	Steve DeClario
Function:	Chief Engineer
Company:	Glassman High Voltage, Inc. PO Box 317 124 West Main Street High Bridge, NJ 08829-0317 USA
TCF number:	98001OS
EMC Compliance Report:	PRO21646-13rev1.GHV
Date:	April 19, 2013
Competent Body:	TUV Rheinland EPS B.V. PO Box 15 9822 ZG Niekerk The Netherlands
Signature:	Steven DeClario
Function:	Staff Engineer
Date:	May13, 2013

EC Representative: Glassman Europe Limited, 21 Campbell Court, Campbell Road, Bramley, Tadley, Hampshire RG265EG, England.

EMC Directive Addendum

For Model: OS

Your high voltage power supply has been designed and tested to ensure compliance with the European Community's EMC directives when used as described in the instruction manual. However, as we do not supply as standard a remote interface cable, the following precautions must be followed in order to ensure continued compliance with EMC directive radiated and conducted immunity requirements, as specified in the harmonized standard EN61000-6-4:2006, Class A, EN61000-4-6, and EN61000-4-3.

The interface cables must be of a shielded type with the shields terminated to an adequate ground source at both ends of the cable. At the power supply end, pin 1 of the customer interface terminal strip provides a ground connection for the interface cable shield.

If your power supply is a modified standard and contains any additional interface connectors, each additional interface cable must follow the same precautions as stated above.

Please note that if the digital meters are subjected to radiated EM fields in excess of 3V/m, or conducted RF in excess of 3VRMS is applied to the AC input line, the display value may read incorrectly. However, the actual HV output remains stable and the true HV output level can be read from the voltage monitor.

Because of the requirements of the very high voltage that these supplies provide, the design precludes the incorporation of an enclosure around the HV stack. This could result in electrostatic radiation from the HV components at approximately 40kHz. In order to ensure continued compliance with EMC directive radiated emissions requirements, the stack/driver assembly must be externally shielded by placing it within a shielded enclosure, area or building. However, since the HV output is exposed, enough distance must be maintained between the stack and the shielding to eliminate the possibility of corona or arc over.

Shielding may consist of a conductive or semi conductive material placed around the unit and connected to ground or may consist of similar material placed on the surrounding walls in which the unit is housed. The distance between the HV output and the surrounding shielding is recommended to be not less than the following:

100kV - 11" (280mm)
150kV - 16" (406mm)
200kV - 24" (610mm)
250kV - 31' (787mm)
300kV - 38" (965mm)
350kV - 45" (1143mm)
400kV - 52" (1321mm)
450kV - 60" (1727mm)

If a cable is connected to the HVDC output terminal of the stack, that cable need not be contained in a shielded area since the signal at the cable is predominantly DC with a very small AC "ripple" voltage which will not produce significant radiated EMI.

SPECIFICATION CONTROL

Model: PS/OS450N3.0JY1

This model is in full accordance with the standard catalog specifications for the OS series, except as follows:

1. The high voltage stack top toroid is not provided.

2. The high voltage stack base, which would normally be used to mount the stack to the top of the driver cabinet, is not provided.

3. The driver cabinet is not provided.

4. The standard (short) driver to stack interconnect cables are not provided. The standard (long) driver to stack ground and signal interconnect cables are still provided, however, HVAC cables (8 ft) with supplemental insulation, are provided in place of the HVAC "test" cables normally provided.

REVISIONS				GLASSMAN HIGH VOLTAGE, INC. PO Box 317, High Bridge, NJ USA 08829 – www.GlassmanHV.com			
DESCRIPTION	CHK	DATE	LTR	FILE: 1020\ 07JY1#.doc		SPECIFICATION CONTROL JY1 OPTION PS/OS450N3.0JY1	
				DRAWN JJC3	DATE 032714	DWG NO 102007-JY1	REV NR
				CHECK	DATE 032714	SHEET 1 OF 1	

UNPACKING AND INSPECTION

First inspect package exterior(s) for evidence of rough handling in transit. If none, proceed to unpack . . . carefully. After removing the supply from its shipping container, inspect it thoroughly for damage.

IMPORTANT! In cases of damage due to rough handling in transit, notify the carrier immediately if damage is evident from appearance of package. Do not destroy or remove any of the packing material used in a damaged shipment. Carrier companies will usually not accept claims for damaged material unless they can inspect the damaged item and its associated packing material. Claims must be made promptly - certainly within five days of receipt of shipment.

CORRESPONDENCE

Each Glassman power supply has an identification label on the chassis that bears its model and serial number. When requesting engineering or applications information, reference should be made to this model and serial number. If specific components or circuit sections are involved in the inquiry, also indicate the component symbol number(s) shown on the applicable schematic diagram.

GLASSMAN HIGH VOLTAGE, INC.
PO Box 317
124 West Main Street
High Bridge, NJ 08829

TEL. 908-638-3800
FAX. 908-638-3700
E-MAIL Support@GlassmanHV.com
www.GlassmanHV.com

LIMITED WARRANTY

Glassman High Voltage, Inc. ("Glassman") provides a limited warranty in lieu of all other warranties. Buyer's exclusive remedies in the event of a defect are limited to repair, replacement, or at Glassman's discretion, refund of the purchase price. The terms of the limited warranty and the Buyer's remedies are described below.

Glassman warrants its standard power supplies to be free from defect in material and workmanship, and Glassman agrees to repair or replace any power supply which fails to perform in accordance with Glassman's written specifications within three years after date of shipment from Glassman. OEM and modified standard power supplies are warranted to be free from defect in materials and workmanship for one year from date of shipment from Glassman.

This limited warranty shall not apply to any power supply which has been:

(1) Repaired, worked on or altered by persons unauthorized by Glassman which, in Glassman's sole judgement, adversely affects the performance, stability or reliability of the power supply.

(2) Subject to misuse, negligence or accident; or

(3) Connected, installed, adjusted or used otherwise than in accordance with instructions furnished by Glassman.

Glassman reserves the right to make any changes in design or construction of its power supply at any time, without incurring any obligation to make any change whatsoever in units previously delivered.

LIMITATION ON REMEDIES. Buyer's exclusive remedy in the event of a defect in a power supply is limited to the repair or replacement of any defective power supply or to refund of the purchase price at Glassman's sole discretion. Buyer must return the power supply to the Glassman factory, transportation prepaid by the Buyer, within the warranty period for the warranty claim to be effective. **Glassman is not liable to Buyer or to any third party for consequential or incidental damages** under any circumstances, whether due to defect in the power supply, due to delay or failure of delivery, due to a failure of the power supply to perform as specified or for any other reason or cause. Buyer and Glassman agree that Buyer's sole remedy and Glassman's sole liability to Buyer is limited to repair, replacement or refund of the purchase price of the power supply as described herein, whether Buyer's claim arises out of contract or in tort.

DISCLAIMER OF IMPLIED WARRANTIES. This limited warranty excludes all other warranties and is offered and accepted in lieu of any and all other warranties, whether express or implied, including without limitation the implied warranties of merchantability and fitness for a particular purpose.

The entire contract concerning warranty rights and obligations and concerning Buyer's remedies is embodied in this writing. This writing constitutes the final expression of the parties' agreement, and it is a complete and exclusive statement of the terms of that agreement. No statements or understanding, purporting to modify or vary the terms hereof, shall be binding and cannot be relied upon by Buyer.

SAFETY

This symbol, wherever it appears on the supply, alerts you to the presence of uninsulated dangerous voltages - voltages that may be sufficient to constitute a risk of electrical shock.

This symbol, wherever it appears on the supply, alerts you to important operating and maintenance instructions in the accompanying literature. Read the manual.

TERMS IN THIS MANUAL

CAUTION statements identify conditions or practices that could result in damage to the equipment or other property.

WARNING! statements identify conditions or practices that could result in injury or loss of life.

WARNING!

To avoid the risk of shock or fire do not attempt to service the supply beyond that described in these instructions.

To avoid the risk of shock and personal injury, do not remove the product covers while the unit is operating or connected to the AC mains. Wait at least 2 minutes after disconnecting the AC mains power before removing any covers or panels.

Do not handle exposed high voltage terminations or attempt to make or remove any connections to the supply until load and/or supply has been fully discharged (grounded). An unloaded supply may take up to 60 seconds to discharge.

Upon loss of protective ground connection(s), all accessible conductive parts can render an electric shock.

Use only a power cord rated greater than the input current rating of the unit. Use only a cord in good condition.

To avoid fire hazard, use only fuses of the correct type, voltage rating, and current rating as specified.

To avoid explosion, do not operate this product in an explosive atmosphere.

If liquid is spilled on the supply, shut it off immediately and disconnect it from the AC mains.

Always maintain adequate supply ventilation. All ventilation openings must remain free from obstruction.

PREPARATION FOR USE

LINE VOLTAGE

This supply is capable of continuous operation using input voltages of 198-263V rms, single phase, 48-63Hz.

INPUT POWER

A terminal block, TB1, is provided on the rear panel of the driver assembly for connection to AC power. The power cord employed should contain wires capable of supplying at least 20 amperes RMS each. Terminals TB1-1 & 2 are connected to the AC power. Terminal TB1-3 MUST be connected to a good earth ground for electrical shock protection. In Europe, this ground wire must be green/yellow in color.

It is recommended that some means be provided for disconnecting the unit(s) from the mains, such as an appropriate plug/jack combination or a distribution box with safety switch or circuit breaker.

For C E compliant supplies used in Europe:
Please refer to the Declaration of Conformity located elsewhere in this manual for installation environment conditions required to conform to 73/23/EEC (Low Voltage Directive).

LINE FUSE

The fuse holders are located on the rear panel of the driver assembly; one for each AC line. The following procedure can be used to install replacement fuses:

1. Disconnect the power source from the unit.
2. Press in and slightly rotate the fuse holder cap counterclockwise to release it.
3. Pull the cap (with attached fuse) out of the fuse holder.
4. Check the fuse and obtain replacement if needed (REPLACE WITH SAME TYPE ONLY).
5. Reinstall the fuse (or replacement fuse) and the fuseholder cap.

INSTRUMENT COOLING

Always maintain adequate supply cooling. All ventilation holes must remain free from obstruction.

OPEN STACK INTERCONNECT CABLES

An additional set of interface cables is provided for the open stack. Use of this longer set of cables facilitates operating the power supply with the open stack HV assembly located safely away from the main chassis (e.g. for test purposes).

REVERSE POLARITY SUPPLIES

Two separate HV stack assemblies - one for each polarity - are shipped with the power supply. A label affixed to each high voltage indicates its polarity. Connect the high voltage assembly of the desired polarity as shown in the outline and interface drawing.

CONTROLS, CONNECTORS, AND INDICATORS

REMOTE CONTROL ASSEMBLY FRONT PANEL (Refer to Outline and Installation Drawing)

POWER Switch/Indicator - Turns the supply power on and off (1 = ON, 0 = OFF). The integral indicator will illuminate when the switch is ON and the AC input power is present.

INTERLOCK Indicator - Shows that an open is/was present in the customer interlock circuit. High voltage output is disabled and cannot be enabled until the open interlock is corrected (closed) and the system is reset.

HV ON Indicator - Illuminates when the high voltage is enabled.

HIGH VOLTAGE ON Pushbutton - Enables the high voltage output when depressed. This pushbutton will NOT activate the HV output if;

a) The **INTERLOCK** indicator is not illuminated.

b) Unit is in **CURRENT TRIP** mode.

HIGH VOLTAGE OFF/RESET Pushbutton - Turns off the high voltage output and resets current trip (see S4 description for an explanation of current trip).

KILOVOLT CONTROL - Sets the output voltage regulation point.

0.00 = 0.00kV
10.00 = Maximum rated output voltage

KILOVOLT CONTROL Indicator - Illuminates when supply is in the voltage regulation mode.

KILOVOLT Digital panel meter - Displays output voltage in kilovolts (unless otherwise specified).

MILLIAMPERE CONTROL - Sets the output current regulation or current trip point.

0.00 = 0.00mA
10.00 = Maximum rated output current

MILLIAMPERE CONTROL Indicator - Illuminates when the supply is in the current regulation mode or a current trip has occurred (see S4 description for an explanation of current trip).

MILLIAMPERE Digital Panel Meter - Displays output current in milliamperes (unless otherwise specified).

POLARITY (POS & NEG) Indicators - Displays the polarity with respect to ground of the high voltage output.

DRIVER ASSEMBLY FRONT PANEL
(Refer to Outline and Installation Drawing)

POWER ON Indicator - Will light when the POWER switch on the remote control assembly is in the ON (1) position, if AC power is applied to the driver assembly and the interface cables have been properly installed.

J3 - AC INTERFACE connector - This connector and associated cable, **W5**, carry the AC power between the driver assembly and the remote control assembly.

J4 - DRIVER INTERFACE connector - This connector and associated cable, **W6**, carry the low voltage control signals between the driver assembly and the remote control assembly.

REMOTE CONTROL ASSEMBLY REAR PANEL
(Refer to Outline and Installation Drawing)

E1 - GROUND - This is the ground terminal for the remote control assembly. This terminal MUST be connected to a good ground. DO NOT use this as the main ground terminal or load return point.

J1 - AC INTERFACE connector - This connector and associated cable, **W5**, carry the AC power between the driver assembly and the remote control assembly.

J2 - DRIVER INTERFACE connector - This connector and associated cable, **W6**, carry the low voltage control signals between the driver assembly and the remote control assembly.

J3 & J4 - RESERVED - These are unused connector locations.

POWER ON indicator - This indicator will illuminate when the POWER switch is ON and the AC input power is present.

S4 - CT/CL switch - Selects current trip or current limit operating modes. Normally, when the output current of the supply reaches the MILLIAMPERE CONTROL setpoint, a crossover occurs and the supply becomes a current, rather than voltage regulating supply.

When S4 is set to the **CT** (current trip) position, an overcurrent condition will disable the high voltage. The MILLIAMPERE CONTROL indicator will remain lit, and the unit will remain in a current trip

condition until either the HIGH VOLTAGE OFF/RESET button is pressed, or the supply is reset by toggling the AC POWER switch off and on.

TB1 - CUSTOMER INTERFACE connector - Provides customer interface connections as follows:

TB1-1	CHASSIS GROUND	**TB1-7**	I MONITOR
TB1-2	COMMON	**TB1-8**	I PROGRAM
TB1-3	RESERVED	**TB1-9**	LOCAL I CONTROL
TB1-4	KV MONITOR	**TB1-10**	10V REFERENCE
TB1-5	KV PROGRAM	**TB1-11**	HV ENABLE
TB1-6	LOCAL KV CONTROL	**TB1-12**	HV STATUS

(explained in greater detail later)

DRIVER ASSEMBLY REAR PANEL
(Refer to Outline and Installation Drawing)

WARNING!

DO NOT HANDLE EXPOSED HIGH VOLTAGE TERMINATIONS OR ATTEMPT TO MAKE OR REMOVE ANY CONNECTIONS TO THE SUPPLY UNTIL THE LOAD AND/OR SUPPLY HAS BEEN DISCHARGED (GROUNDED). AN UNLOADED SUPPLY MAY TAKE UP TO 60 SECONDS TO FULLY DISCHARGE.

E1 - GROUND - **WARNING!! E1 MUST be grounded.** Use **W4** to connect this ground to the E1 GROUND on the external stack assembly.

F1 & F2 - MAIN POWER FUSES - Always replace with same type as installed.

JHV1, JHV2, W1, W2 - HVAC - These connectors and wires deliver the high voltage AC power generated in the driver assembly to the external high voltage stack assembly.

J1, W3 - SIGNAL INTERFACE - This connector and cable carry the current and voltage feedback, polarity, and interlock signals from the HV stack assembly to the driver assembly.

NOTE: An additional set of interface cables is provided. Use of this longer set of cables facilitates operating the power supply with the open stack HV assembly located safely away from the driver assembly (e.g. for test purposes).

J2 - RESERVED - This is an unused connector location.

POWER ON Indicator - Illuminates when AC power is ON.

TB1 - AC INPUT Connector.

TB1-1 AC LINE
TB1-2 AC LINE
TB1-3 GROUND

For CE compliant supplies used in Europe:
Please refer to the Declaration of Conformity located elsewhere in this manual for installation environment conditions required to conform to 73/23/EEC (Low Voltage Directive).

TB2 - CUSTOMER INTERFACE Connector.

TB2-1 - GROUND
TB2-2 - COMMON
TB2-3 - INTERLOCK
TB2-4 through TB2-12 - RESERVED

(explained in greater detail later)

HV STACK ASSEMBLY
(Refer to Outline and Installation Drawing)

WARNING! NEVER ATTEMPT TO OPERATE SUPPLY WITHOUT A GOOD EARTH GROUND CONNECTED TO THE GROUND STUD OF THE HIGH VOLTAGE STACK ASSEMBLY.

E1 - GROUND - Use **W4** to connect this ground to the E1 GROUND on the driver assembly.

E2 - HIGH VOLTAGE OUTPUT Connector.

JHV1, JHV2, W1, W2 - HVAC - These connectors and wires deliver the high voltage AC power generated in the driver assembly.

J1, W3 - SIGNAL INTERFACE - This connector and cable carry the current and voltage feedback, polarity, and interlock signals from the external high voltage assembly to the driver assembly.

J2 - RESERVED - This is an unused connector location.

WARNING!

DO NOT HANDLE EXPOSED HIGH VOLTAGE TERMINATIONS OR ATTEMPT TO MAKE OR REMOVE ANY CONNECTIONS TO THE SUPPLY UNTIL THE LOAD AND/OR SUPPLY HAS BEEN DISCHARGED (GROUNDED). AN UNLOADED SUPPLY MAY TAKE UP TO 60 SECONDS TO FULLY DISCHARGE.

INSTALLATION AND OPERATION

The following procedure should be followed to connect and operate the equipment after it has been placed or mounted in position.

WARNING! NEVER ATTEMPT TO OPERATE THIS UNIT WITHOUT A GOOD EARTH GROUND CONNECTED TO THE MAIN GROUND STUD, E1 ON THE DRIVER ASSEMBLY.

THE LOAD RETURN SHALL ALSO BE CONNECTED TO E1 ON THE DRIVER ASSEMBLY

READ AND FULLY UNDERSTAND THE OPERATING INSTRUCTIONS BEFORE APPLYING POWER TO THIS UNIT.

THIS EQUIPMENT EMPLOYS VOLTAGES THAT ARE DANGEROUS. EXTREME CAUTION MUST BE EXERCISED WHEN WORKING WITH THIS EQUIPMENT.

DO NOT HANDLE THE LOAD OR EXPOSED HIGH VOLTAGE TERMINATIONS, OR ATTEMPT TO MAKE OR REMOVE ANY CONNECTIONS TO THE SUPPLY UNTIL THE LOAD AND/OR SUPPLY HAS BEEN DISCHARGED (GROUNDED). AN UNLOADED SUPPLY MAY TAKE UP TO 60 SECONDS TO FULLY DISCHARGE.

INITIAL TURN ON

It is suggested that the operator become familiar with the operation of the unit under local (front panel) control and then add the remote functions as desired. Thus, the initial turn on sequence described below assumes that there are no signals applied to the customer interface connectors and that the ground, common, and interlock terminals are strapped together on TB2 of the driver assembly.

Please verify the following:

1. That the AC power is disconnected from the unit, either by the disconnecting of an appropriate plug/jack combination or, if the supply is wired directly to the mains, by setting the power breaker or safety switch to OFF.
2. That COMMON and INTERLOCK are tied together on TB2 of the driver assembly
3. That COMMON and GROUND are tied together on TB2 of the driver assembly.
4. That there are no signals applied to TB1 on the remote control assembly.
5. That a good earth ground is connected the main ground stud, E1 on the driver assembly.
6. That all jumpers are installed for local operation, and the CT/CL switch is set to CL (current limit) position on the remote control chassis.

7. That all inter-chassis wires and cables have been installed in accordance with the schematic/ interface drawings supplied.

8. That the front panel switches and controls are set as follows:

POWER SWITCH	Off (0)
KILOVOLT CONTROL	Counterclockwise
MILLIAMPERE CONTROL	As required for load, 1.00 = 10% of rating 5.00 = 50% of rating, etc.

9. Connect the load (optional) as follows:

   a) Connect the load return to the main ground, E1 on the driver assembly.

   b) Connect the HV end of the load to the "push to insert" connector, located on the top toroid of the open stack assembly (see installation documentation).

WARNING! NEVER ATTEMPT TO OPERATE THIS UNIT WITHOUT A GOOD EARTH GROUND CONNECTED TO E1 OF THE DRIVER CHASSIS.

Power up sequence:

1. Make appropriate line cord connections to the power source.

2. Set the POWER switch on the front panel to the ON (1) position. The MILLIAMPERE AND KILOVOLT meters should read approximately zero. The following indicators should be illuminated:

   POWER
   KILOVOLT CONTROL
   POLARITY (POS or NEG)

3. Activate the high voltage output by depressing HIGH VOLTAGE ENABLE button. The HIGH VOLTAGE ON lamp will illuminate.

4. Rotate KILOVOLT CONTROL clockwise until the KILOVOLT digital panel meter indicates the desired voltage. If the MILLIAMPERE CONTROL indicator illuminates before the desired voltage is achieved, the supply has gone into constant current mode (current limit) and the setting of the MILLIAMPERE CONTROL will have to be increased to supply the required current to the load, at the desired kV level.

5. The high voltage can be turned off by depressing the HIGH VOLTAGE OFF/RESET pushbutton. The supply will go into the standby mode (HIGH VOLTAGE ON lamp off). The high voltage can also be turned off by shutting down the supply with the POWER switch. When the supply is again powered up, the unit will go into the standby mode.

WARNING!

DO NOT HANDLE THE LOAD OR EXPOSED HIGH VOLTAGE TERMINATIONS OR ATTEMPT TO MAKE OR REMOVE ANY CONNECTIONS TO THE SUPPLY UNTIL THE LOAD AND/OR SUPPLY HAS BEEN DISCHARGED (GROUNDED). AN UNLOADED SUPPLY MAY TAKE UP TO 60 SECONDS TO FULLY DISCHARGE.

CUSTOMER INTERFACE
DRIVER ASSEMBLY - TB2
(Refer to Customer Interface Drawing)

TB2-1 GROUND

This is an instrumentation GROUND connection. This terminal should not be used as the main connection to earth ground. Use driver assembly E1 for that purpose. (see Figure 7, 9 & 10).

TB2-2 COMMON

This terminal is the system return. TB2-2 is internally wired to GROUND and can be used for any return including the load return (see Figures 7, 9 & 10).

TB2-3 INTERLOCK

This terminal must be connected to TB2-2 COMMON to enable the supply. If desired, the jumper may be removed and replaced by an external switch which must be closed for the supply to operate. If the external switch is opened, the supply output will drop to zero. When the switch is again closed, the front panel HIGH VOLTAGE ON pushbutton must be depressed to re-enable the supply (see Figure 1).

REMOTE CONTROL INTERFACE
TB1 ON REMOTE CONTROL ASSEMBLY
(Refer to Customer Interface Drawing)

TB1-1 GROUND

This is an instrumentation ground connection. This terminal should not be used as the main connection to earth ground. Use driver assembly E1 for that purpose (see Figure 7,9, & 10).

TB1-2 COMMON

This terminal is provided for programming and measuring instrument returns. It is connected internally to the same COMMON as TB2-2 on the driver chassis (see Figures 7, 9 & 10).

TB1-4 V-MONITOR

A 0-10V positive signal (with respect to COMMON), in direct proportion to the output voltage, is available at this terminal. An internal 10k ohm, 1%, limiting resistance protects the circuitry. Therefore, it is recommended that a digital voltmeter be used to monitor this output. It is also acceptable to use a 1mA DC full scale instrument (i.e. analog meter) for monitor purposes (see Figure 5).

TB1-5 V-PROGRAM
TB1-6 LOCAL V-CONTROL

A positive 0-10V signal (with respect to COMMON) at TB1-5 will program the output voltage proportionally from zero to rated output. This input can be programmed in several ways (see Figures 3, 9 & 10):

* A user supplied 0 to +10V signal.
* A user supplied potentiometer (5-50k ohms, 10k nominal) can be connected between the 10V REFERENCE and COMMON, with the wiper connected to the V-PROGRAM terminal.
* The 0 to +10V signal available at TB1-6, and adjusted by the local (front panel) KILOVOLTS control.
* The V-PROGRAM input may be jumpered to the REFERENCE voltage terminal for a fixed output at the maximum voltage.

TB1-7 I-MONITOR

A 0-10V signal, positive with respect to COMMON, and in direct proportion to the output current, is available at this terminal. An internal 10k ohm, 1%, limiting resistance protects the circuitry. Therefore, it is recommended that a digital voltmeter be used to monitor this output. It is also acceptable to use a 1mA DC full scale instrument (i.e. analog meter) for monitor purposes (see Figure 6).

TB1-8 I-PROGRAM
TB1-9 LOCAL I-CONTROL

A 0-10V positive signal (with respect to COMMON) at TB1-8 will program the output current proportionally from zero to full output. This input can be programmed in several ways (see Figures 4, 9 & 10):

* A user supplied 0 to +10V signal.
* A user supplied potentiometer (5-50k ohms, 10k nominal) can be connected between the 10V REFERENCE and COMMON, with the wiper connected to the I-PROGRAM terminal.
* The 0 to +10V signal available at TB1-9, adjusted by the local (front panel) MILLIAMPERES control.
* The I-PROGRAM input may be jumpered to the REFERENCE for a fixed current limit at the maximum rated current.

TB1-10 REFERENCE

The output of this terminal is an ultra-stable, positive, 10V reference voltage (with respect to COMMON) that is supplied for user programming applications. Maximum current drain from this point should be limited to 4mA.

TB1-11 HV ENABLE

This terminal must be connected to a positive 2.5-15V source (with respect to COMMON) to enable the supply. A 0-1.5V signal at this input will disable the supply. When no external control is required this input can be jumpered to the 10V REFERENCE terminal (see Figure 2).

TB1-12 SIGNAL HV STATUS

This signal reflects the status of the high voltage output. A "high" signal indicates that the high voltage is on. A "low" indicates that the high voltage is off. This signal is an open drain output with a 1k pull-up resistor to +5V. Sink current should be limited to 50mA @ 0.4V. (see Figure 8).

NOTE:
Figure 9 is just one example of the many possible interface configurations.

Figure 10 shows the minimum number of connections to completely enable the supply. In this configuration, output voltage and current are controlled by the front panel controls (except on "NC" option units which have no front panel controls). No external interlock or TTL signals are required.

REV	BY	DESCRIPTION	DATE	APPROVED
A	MDS	ECN 5633: CHASSIS DESCRIPTION	041398	JJC
B	TJM	ECN 5741: ADDED MULTI SECTION DETAILS.	071598	JMC
C	MDS	ECN 5817: UPDATED TO PROTOTYPE	092298	DWS
C-1	TJP	ADDRESS UPDATE	030612	HWS

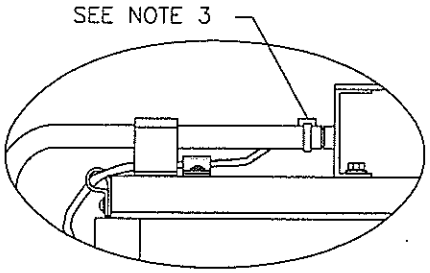

DETAIL A

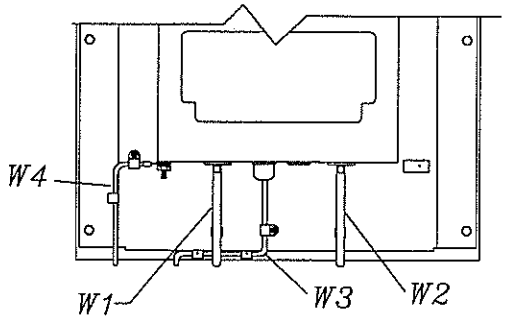

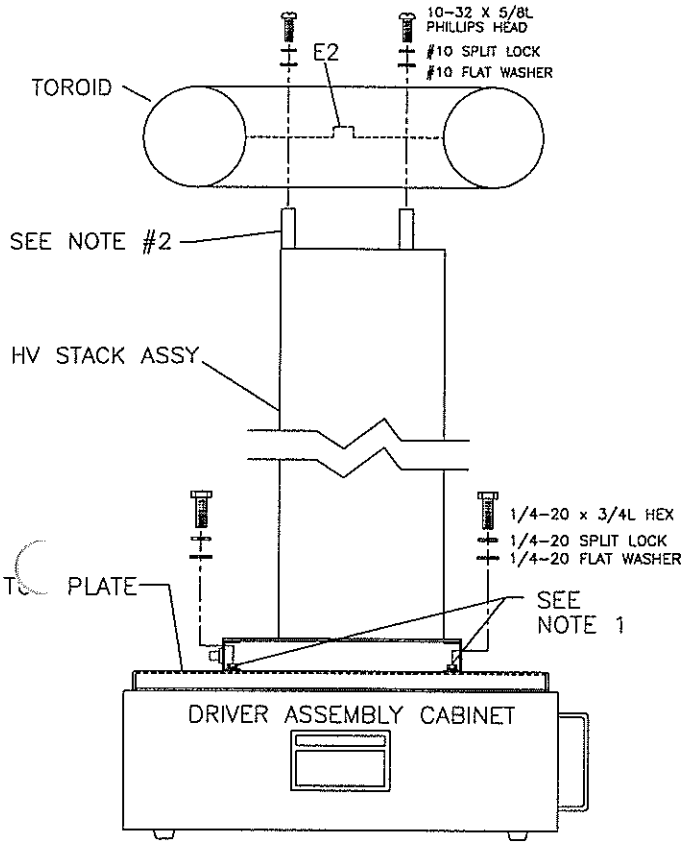

STACK AND DRIVER MECHANICAL ASSEMBLY (100-300KV)

NOTES:

1. MOUNT HV STACK ASSEMBLY TO TOP PLATE OF DRIVER ASSEMBLY CABINET WITH 1/4-20 HARDWARE PROVIDED. (4 PLACES)
2. MOUNT TOROID TO HV STACK ASSEMBLY WITH 10-32 HARDWARE PROVIDED. (4 PLACES)
3. CAUTION: DO NOT SCRATCH OR DAMAGE TOROID.

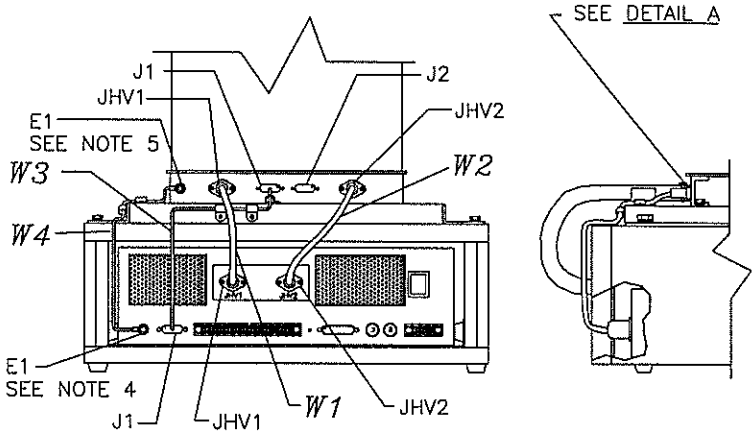

STACK AND DRIVER WIRING INSTRUCTIONS (100-450KV)

NOTES:

1. CONNECT INTERFACE CABLE (*W3*) AS SHOWN. SECURE WITH 5/16" CLAMPS PROVIDED.
2. CONNECT GROUND CABLE (*W4*) AS SHOWN. SECURE WITH 7/16" CLAMPS PROVIDED.
3. CONNECT HIGH VOLTAGE CABLES (*W1 & W2*) AS SHOWN. SECURE CABLES AT EACH END WITH RECLOSABLE TIE WRAPS PROVIDED. SEE DETAIL A.
   CAUTION: HIGH VOLTAGE CABLES MUST BE KEPT AWAY FROM INTERFACE CABLE (*W3*).
4. PROVIDE ADEQUATE GROUND TO DRIVER ASSEMBLY GROUND STUD (E1).
5. PROVIDE ADEQUATE LOAD RETURN TO HV OPEN STACK GROUND STUD (E1).

IN (MM)

UNLESS OTHERWISE SPECIFIED DIMENSIONS ARE IN INCHES TOLERANCES ARE :
DEC. XXX ± XX ±
DEG. ±

THIRD ANGLE PROJECTION

DO NOT SCALE DRAWING

FILE NO. EXTENSION
\1013\19001C1.DWG

APPROVALS		DATE
DRAWN	TLR	012298
CHECKED	JMC	012298
RELEASED		

GLASSMAN HIGH VOLTAGE, INC.
P.O. BOX 317, HIGH BRIDGE, NJ 08829
(908)-638-3800 FAX (908)-638-3700

TITLE
OUTLINE & INSTALLATION
SYSTEM - SERIES OS

A | DWG.NO. 101319-001 | REV. C-1

SCALE NONE | SHEET 1 OF 4

REV	BY	DESCRIPTION	DATE	APPROVED

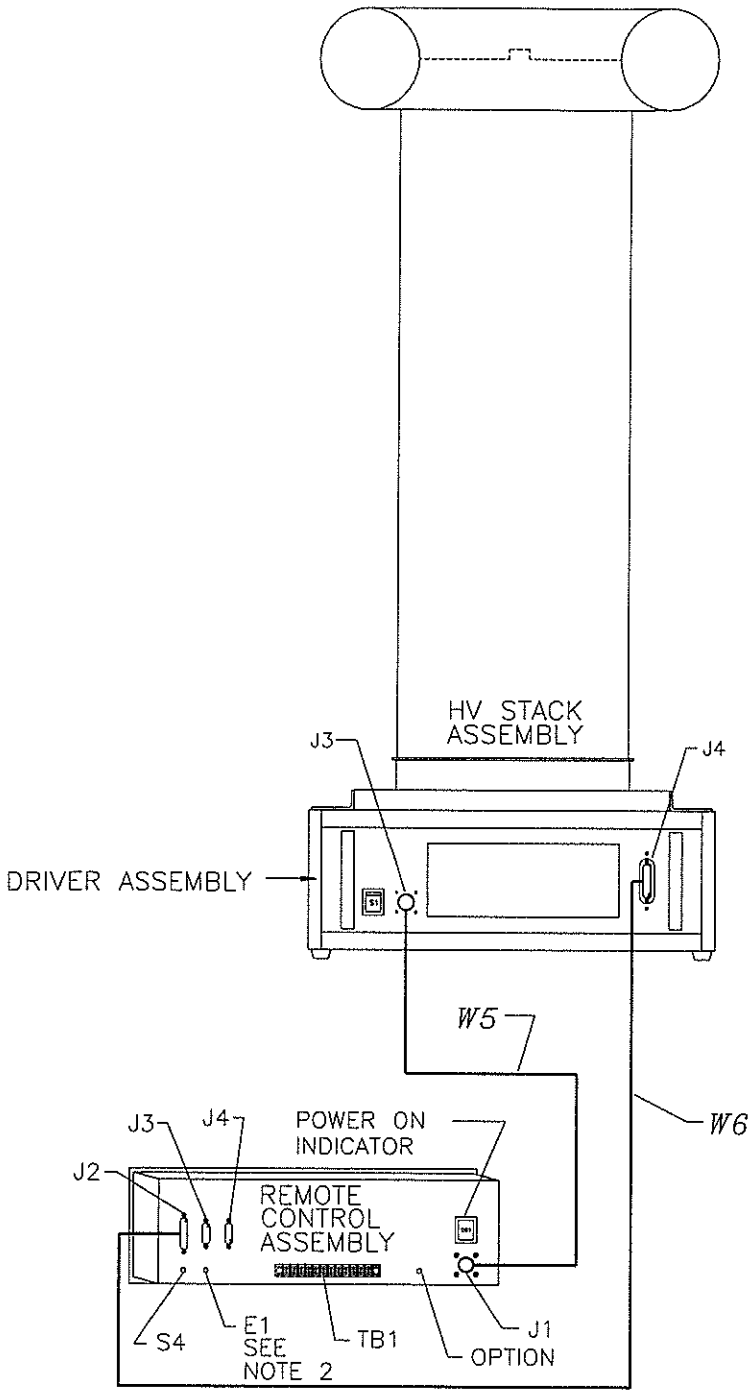

FRONT VIEW OF HV STACK ASSEMBLY AND REAR VIEW OF REMOTE CONTROL ASSEMBLY

REMOTE AND DRIVER WIRING INSTRUCTIONS (100–450KV)

NOTE:

1. CONNECT CABLES (*W5* & *W6*) AS SHOWN.
2. PROVIDE ADEQUATE GROUND TO REMOTE CONTROL UNIT GROUND STUD (E1).

IN (MM)

UNLESS OTHERWISE SPECIFIED DIMENSIONS ARE IN INCHES TOLERANCES ARE :
DEC. XXX ± XX ±
DEG. ±

THIRD ANGLE PROJECTION

DO NOT SCALE DRAWING

FILE NO. EXTENSION
\1013\19001C1.DWG

APPROVALS		DATE
DRAWN	TLR	012298
CHECKED	JMC	012298
RELEASED		

GLASSMAN HIGH VOLTAGE, INC.
P.O. BOX 317, HIGH BRIDGE, NJ 08829
(908)-638-3800 FAX (908)-638-3700

TITLE
OUTLINE & INSTALLATION
SYSTEM – SERIES OS

A | DWG.NO. 101319-001 | REV. C-1

SCALE NONE | SHEET 2 OF 4

REV	BY	DESCRIPTION	DATE	APPROVED

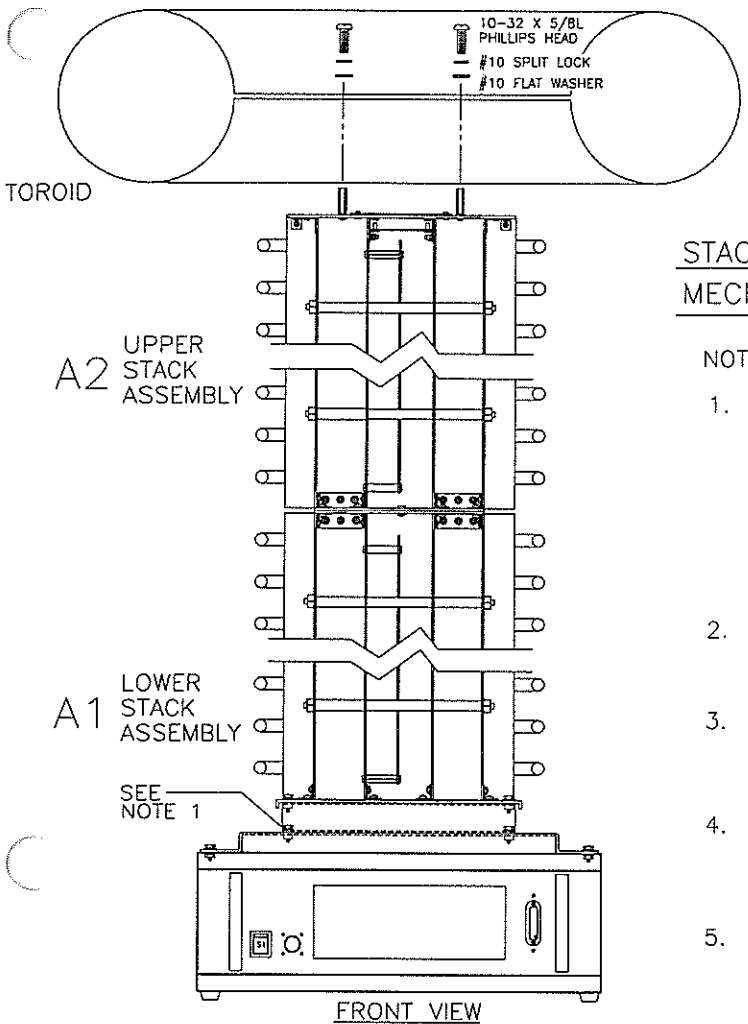

FRONT VIEW
TOROIDS & CORONA RINGS CUT AWAY FOR CLARITY

STACK TO STACK
MECHANICAL & WIRING INSTRUCTIONS (350-450KV)

NOTES:

1. MOUNT LOWER SECTION (A1) OF HV STACK TO TOP PLATE OF DRIVER ASSEMBLY CABINET AND WIRE AS PER SHEET 1.

   DETAILS FOR NOTES 2 THRU 6 ARE LOCATED ON SHEET 4 OF 4.

2. MOUNT UPPER SECTION (A2) TO LOWER SECTION (A1) WITH HARDWARE AS SHOWN IN A2 TO A1 DETAIL.
3. TO CONNECT E3-A2, DRESS WIRE STRAIGHT THRU THE CENTER OF THE CUTOUT. MOUNT WITH HARDWARE SHOWN IN E3 DETAIL.
4. TO CONNECT E1-A2, DRESS WIRES STRAIGHT THRU THE CENTER OF THE CUTOUT. MOUNT WITH HARDWARE AS SHOWN IN DETAIL E1.
5. SECURE A1 TO A2 WITH MOUNTING PLATES AND HARDWARE AS SHOWN IN PLATE DETAIL.
6. CONNECT W1 (P/O A2) WITH HARDWARE AS SHOWN IN W1 DETAIL.
7. MOUNT TOROID TO UPPER SECTION (A2) OF HV STACK WITH 10-32 HARDWARE PROVIDED AS SHOWN. (4 PLACES)
8. CAUTION: DO NOT SCRATCH OR DAMAGE TOROID.
9. E1 AND E3 CONNECTION WIRES MUST NOT TOUCH ANY METAL EDGES. MAKE SURE THEY ARE DRESSED STRAIGHT THRU THE PROPER CUTOUTS AND ARE SECURE.

IN
(MM)

UNLESS OTHERWISE SPECIFIED DIMENSIONS ARE IN INCHES
TOLERANCES ARE :
DEC. XXX ± XX ±
DEG. ±

THIRD ANGLE PROJECTION

DO NOT SCALE DRAWING

FILE NO. EXTENSION
\1013\19001C1.DWG

APPROVALS		DATE
DRAWN	TLR	012298
CHECKED	JMC	012298
RELEASED		

GLASSMAN HIGH VOLTAGE, INC.
P.O. BOX 317, HIGH BRIDGE, NJ 08829
(908)-638-3800 FAX (908)-638-3700

TITLE OUTLINE & INSTALLATION
SYSTEM - SERIES OS
OPEN STACK

A | DWG.NO. 101319-001 | REV. C-1

SCALE NONE | SHEET 3 OF 4

REV	BY	DESCRIPTION	DATE	APPROVED

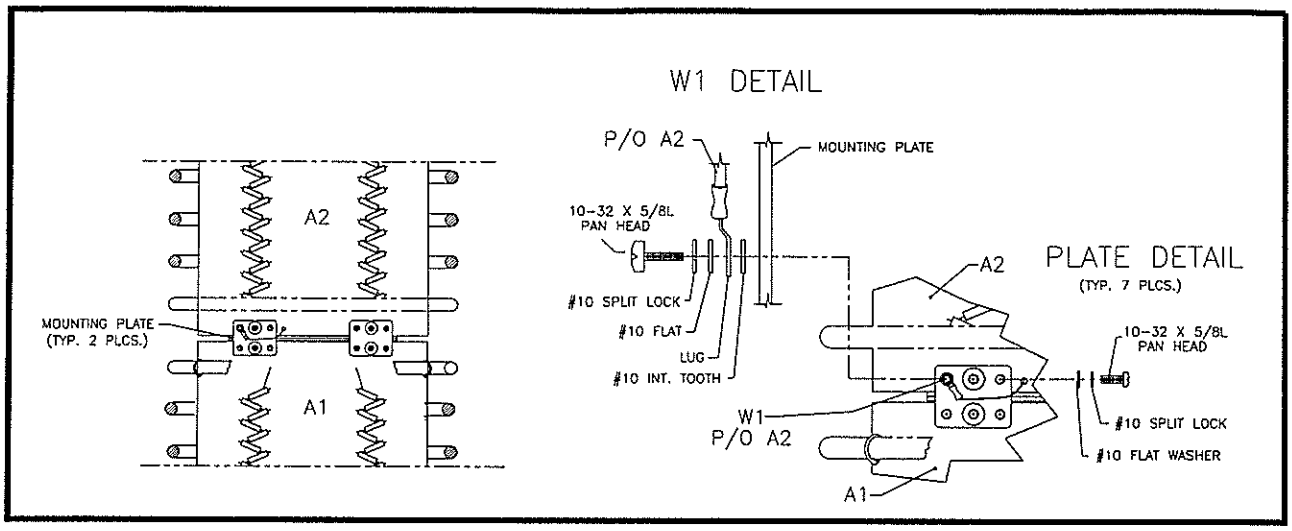

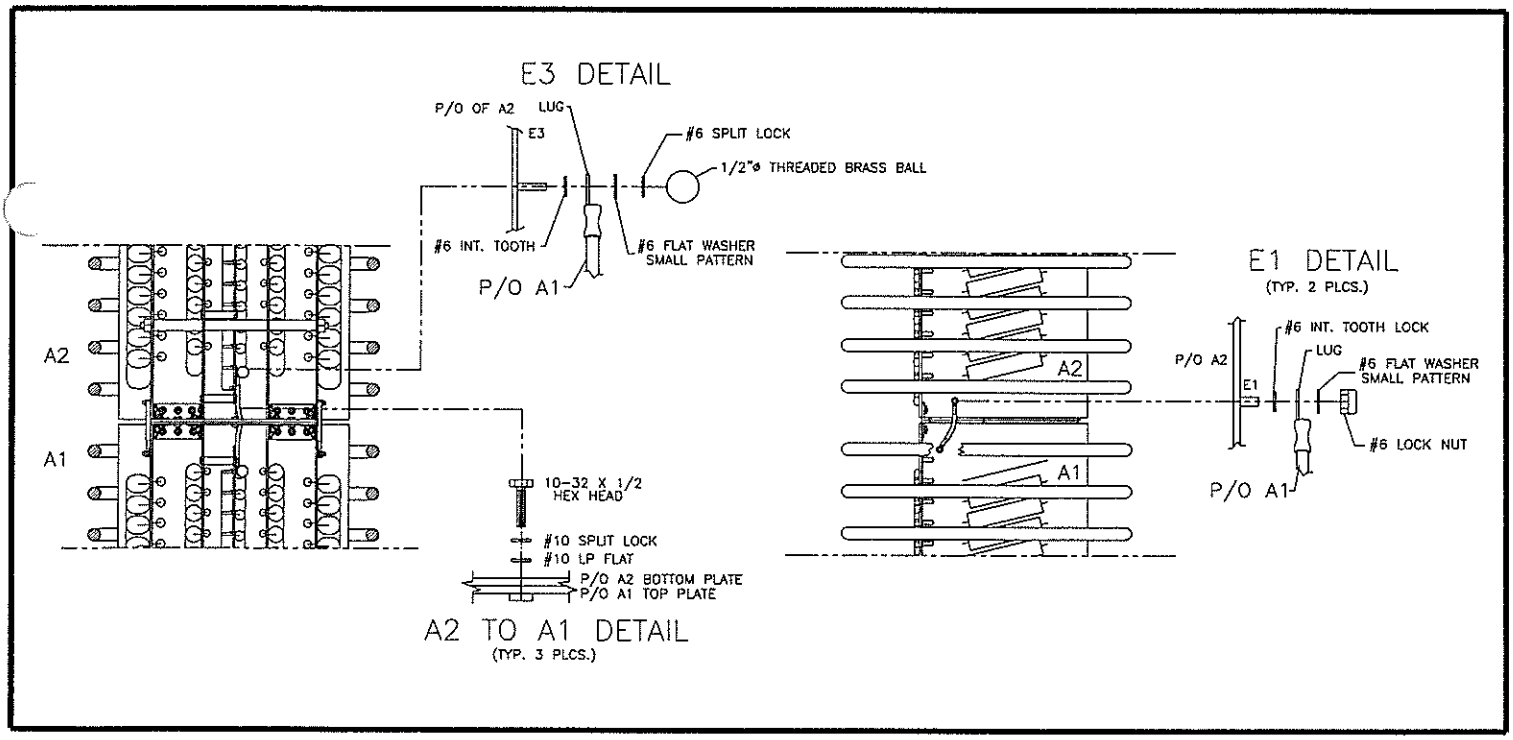

UNLESS OTHERWISE SPECIFIED DIMENSIONS ARE IN INCHES
TOLERANCES ARE :
DEC. XXX ± XX ±
DEG. ±

THIRD ANGLE PROJECTION

DO NOT SCALE DRAWING

FILE NO.	EXTENSION
\1013\19001C1.DWG	

APPROVALS		DATE
DRAWN	TLR	012298
CHECKED	JMC	012298
RELEASED		

GLASSMAN HIGH VOLTAGE, INC.
P.O. BOX 317, HIGH BRIDGE, NJ 08829
(908)-638-3800 FAX (908)-638-3700

TITLE OUTLINE & INSTALLATION
SYSTEM – SERIES OS
OPEN STACK

A | DWG.NO. 101319-001 | REV. C-1

SCALE NONE | SHEET 4 OF 4

REV	BY	DESCRIPTION	DATE	APPROVED
A	TJM	ECN 5521: FIXED TEXT & REMOVED EXTRA PINS.	032598	JS
B	EJM	ECN 5995: AC INPUT WAS 187-253VAC	021099	

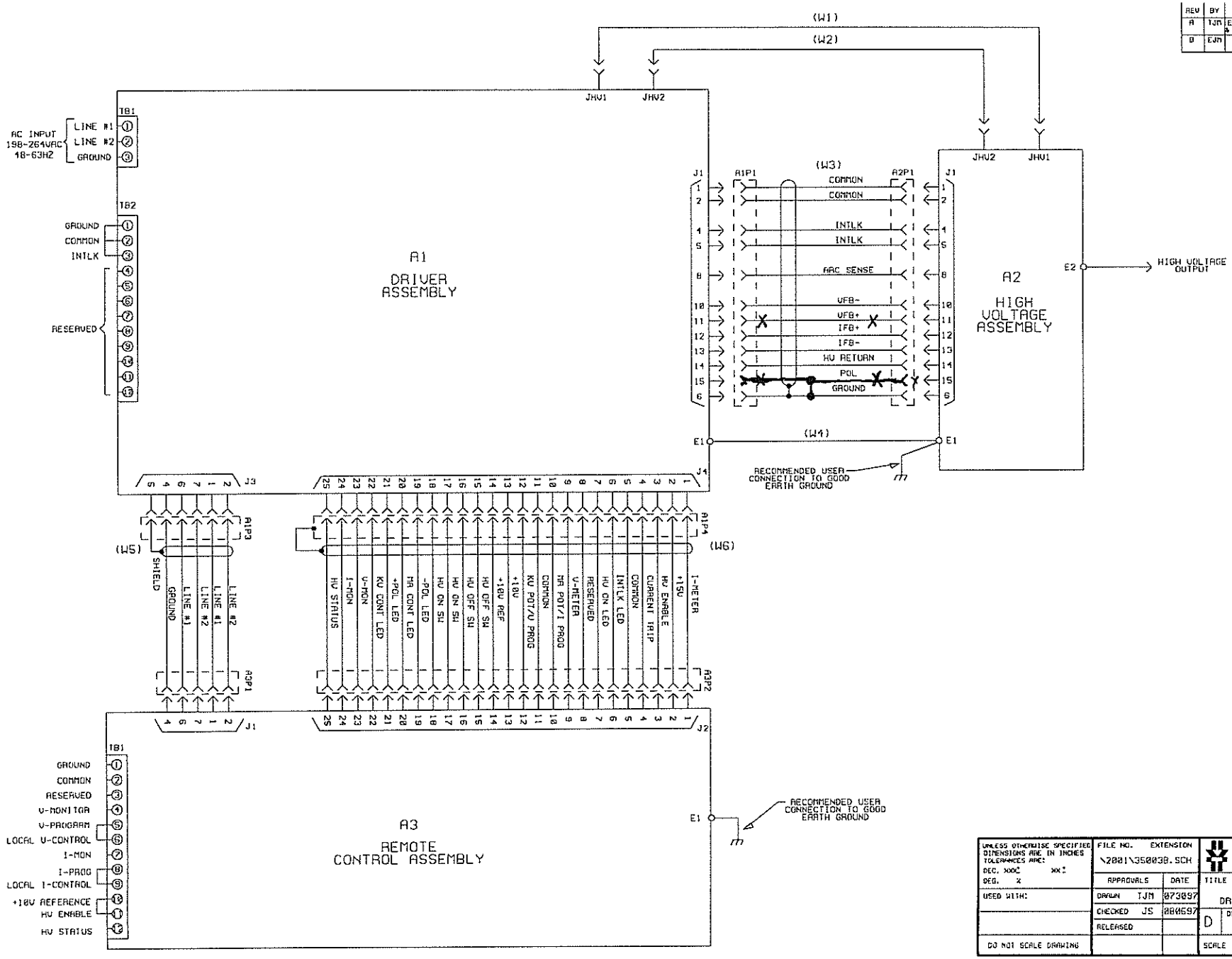

REDUCED ONLY

UNLESS OTHERWISE SPECIFIED DIMENSIONS ARE IN INCHES TOLERANCES ARE: DEC. .XX± .XXX± DEG. ±	FILE NO. EXTENSION \2001\350038.SCH	GLASSMAN HIGH VOLTAGE, INC. P.O. BOX 661, WHITEHOUSE STATION, N.J. 08889 (908) 534-5947 FAX (908) 534-5972
USED WITH:	APPROVALS / DATE: DRAWN TJM 073097; CHECKED JS 080697; RELEASED	TITLE SYSTEM SCHEMATIC DIAGRAM PS/OS SERIES DRIVER, STACK, REMOTE ASSEMBLY
DO NOT SCALE DRAWING		D DWG. NO. 200135-003 REV. B
		SCALE NONE SHEET 1 OF 1

REV	BY	DESCRIPTION	DATE	APPROVED
A	JAG	ECN 10030: SWAPPED D95 & D96 INSIDE BODY NAMES.	040313	HMS
B	JAG	ECN 10148: ADDED D96,D109, D110,D111 & R227.	092313	

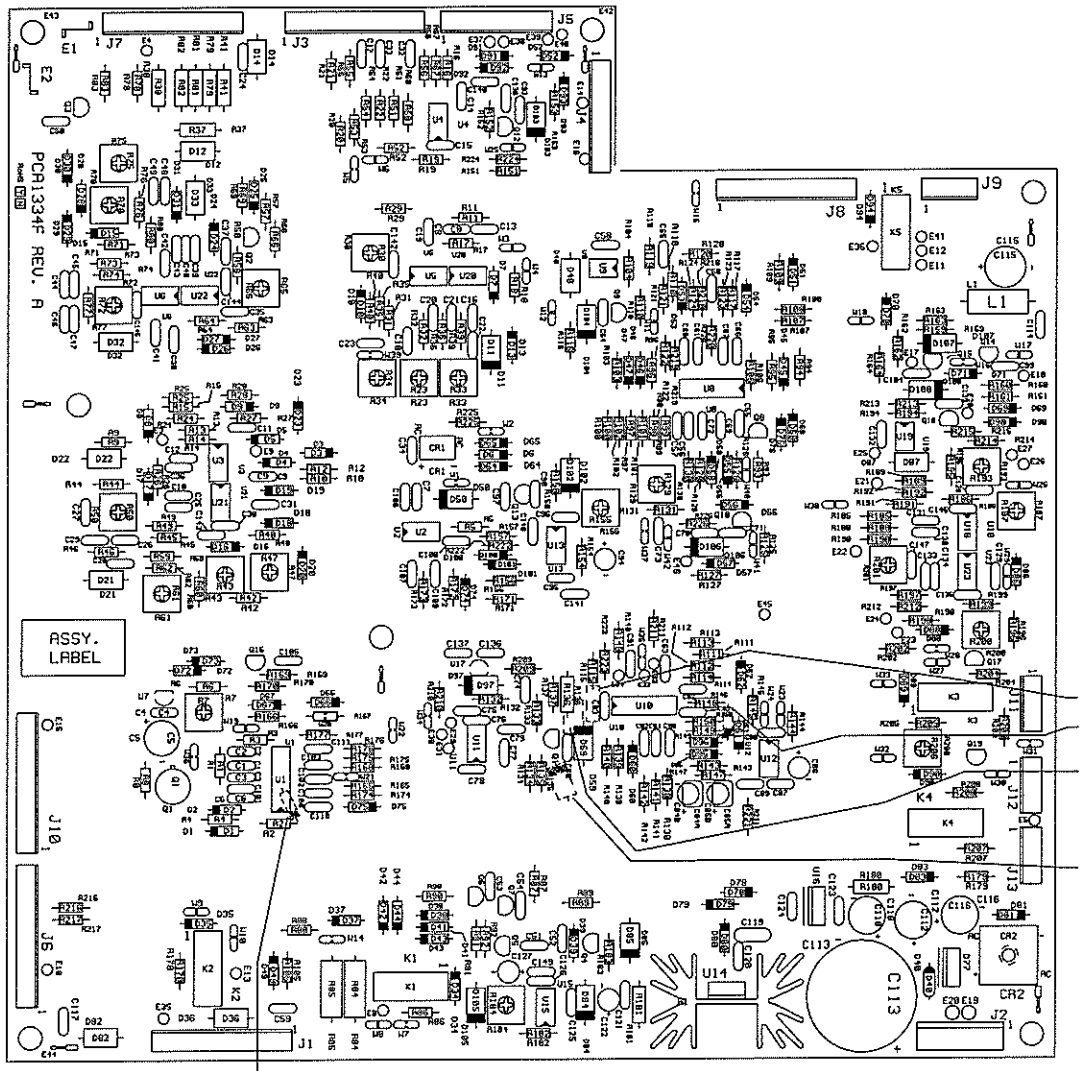

NOTES:

1. IGNORE SCREENED LOCATION FOR D96.

REDUCED ONLY

FILE NO. EXTENSION \PCA1\334019B.PCB		GLASSMAN HIGH VOLTAGE, INC. P.O. BOX 317, HIGH BRIDGE, N.J. 08829 (908) 638-3600 FAX (908) 638-3700
APPROVALS	DATE	TITLE PARTS PLACEMENT DWG. ACB-OS (1334F)
DRAWN TJP	081512	
CHECKED JMC	082012	C DWG.NO. PCA1334-019 REV. B
RELEASED		
SSF		SCALE NONE SHEET 1 OF 1

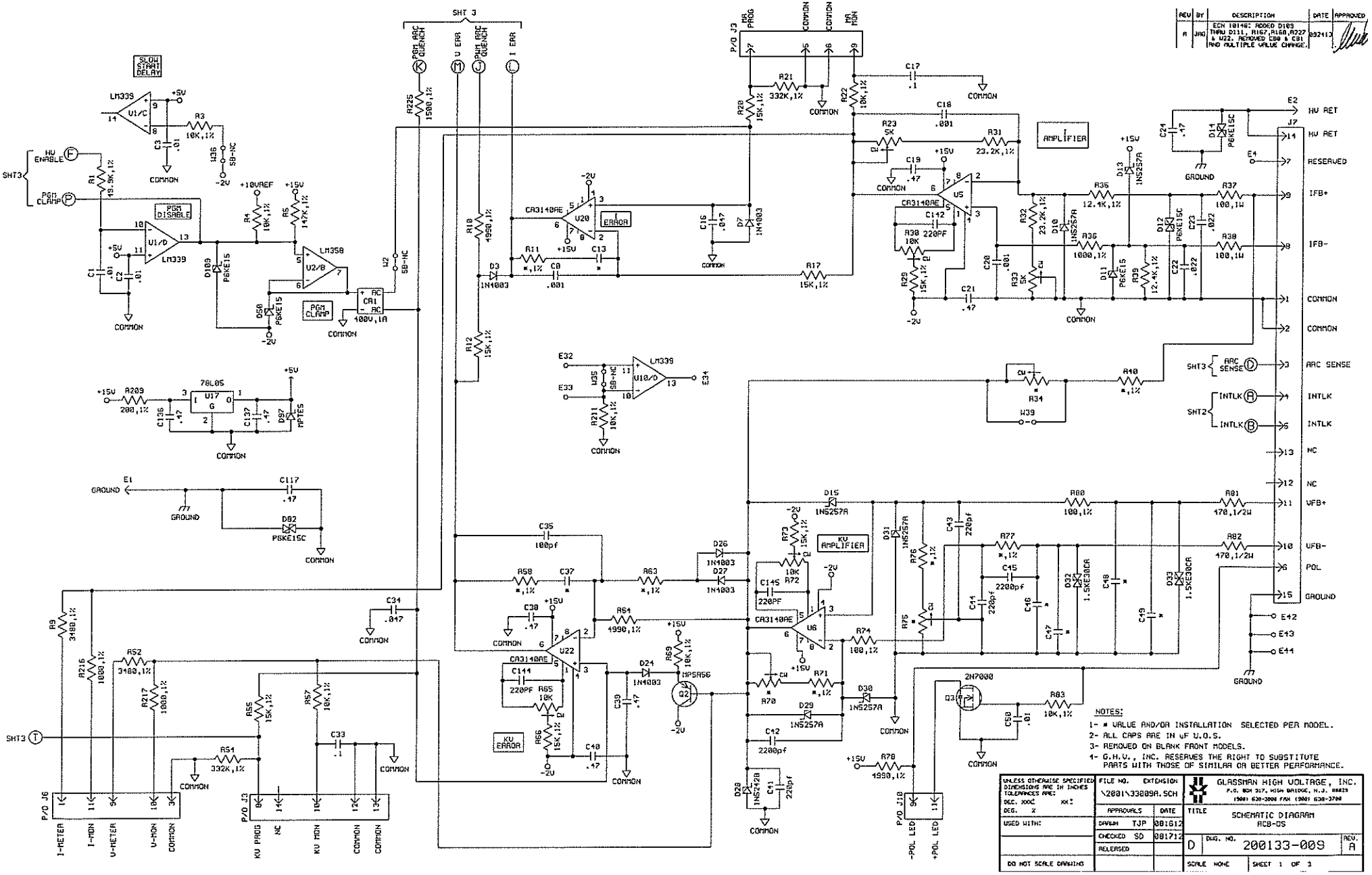

REV	BY	DESCRIPTION	DATE	APPROVED
A	JAQ	ECN 10148: ADDED D189 THRU D111, R167,R180,R227 & U22. REMOVED C88 & C81 AND MULTIPLE VALUE CHANGE.	092413	

NOTES:

1- * VALUE AND/OR INSTALLATION SELECTED PER MODEL.
2- ALL CAPS ARE IN uF U.O.S.
3- REMOVED ON BLANK FRONT MODELS.
4- G.H.V., INC. RESERVES THE RIGHT TO SUBSTITUTE PARTS WITH THOSE OF SIMILAR OR BETTER PERFORMANCE.

UNLESS OTHERWISE SPECIFIED DIMENSIONS ARE IN INCHES TOLERANCES ARE:
DEC. .XXX± .XX±
DEG. ±

USED WITH:

DO NOT SCALE DRAWING

FILE NO. \2001\330009A.SCH
EXTENSION

APPROVALS | DATE
DRAWN TJP 081612
CHECKED SD 081712
RELEASED

GLASSMAN HIGH VOLTAGE, INC.
P.O. BOX 317, HIGH BRIDGE, N.J. 08829
(908) 638-2000 FAX (908) 638-3700

TITLE SCHEMATIC DIAGRAM
RC8-OS

D DWG. NO. 200133-009 REV. A

SCALE NONE SHEET 1 OF 3

REV	BY	DESCRIPTION	DATE	APPROVED

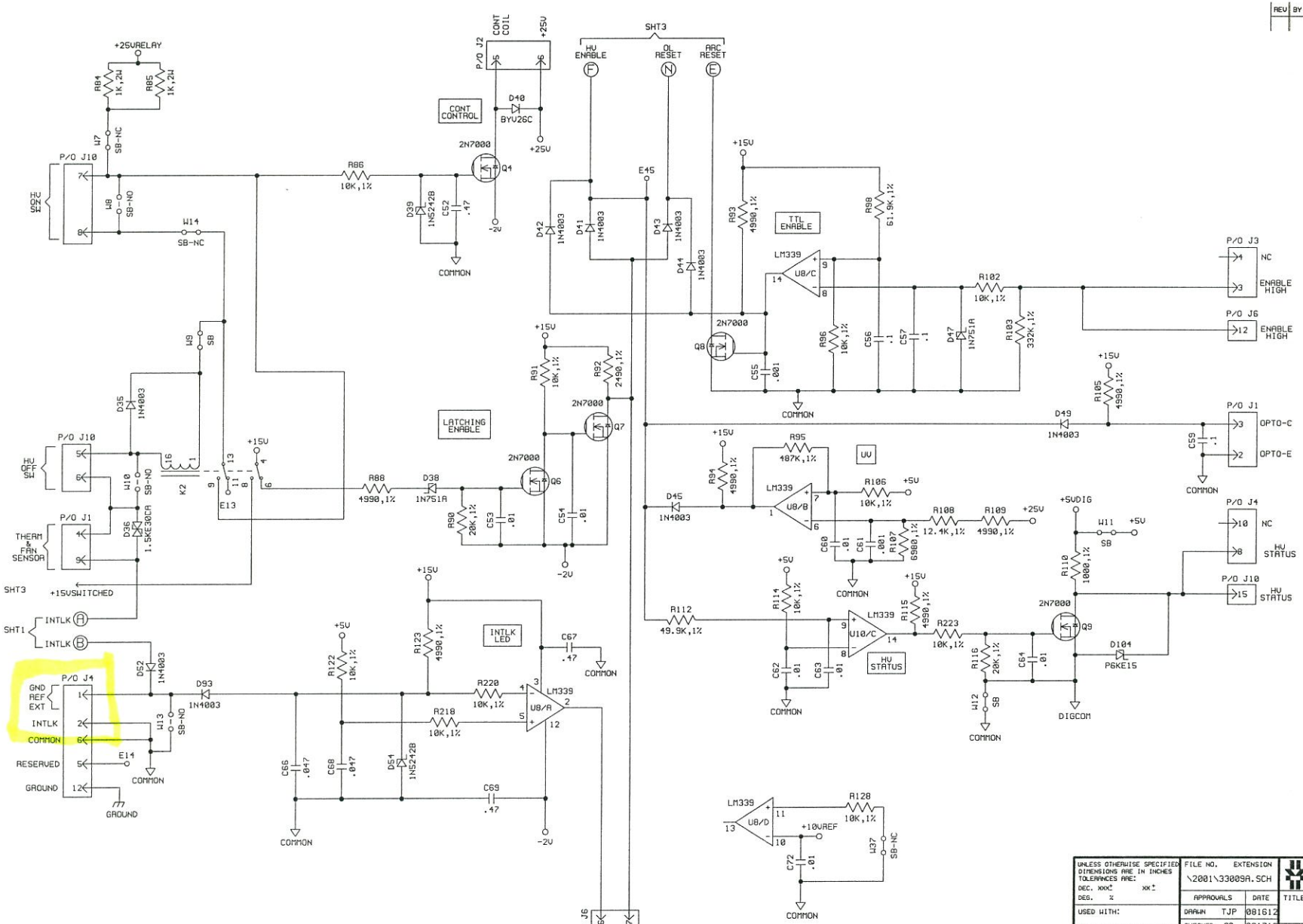

UNLESS OTHERWISE SPECIFIED DIMENSIONS ARE IN INCHES TOLERANCES ARE: DEC. XXX± XX± DEG. ±	FILE NO. EXTENSION \2001\33009A.SCH	GLASSMAN HIGH VOLTAGE, INC. P.O. BOX 317, HIGH BRIDGE, N.J. 08829 (908) 638-3000 FAX (908) 638-3700	
	APPROVALS / DATE	TITLE	SCHEMATIC DIAGRAM ACB-OS
USED WITH:	DRAWN TJP 081612		
	CHECKED SD 081712	D DWG. NO. 200133-009	REV. A
	RELEASED		
DO NOT SCALE DRAWING		SCALE NONE	SHEET 2 OF 3

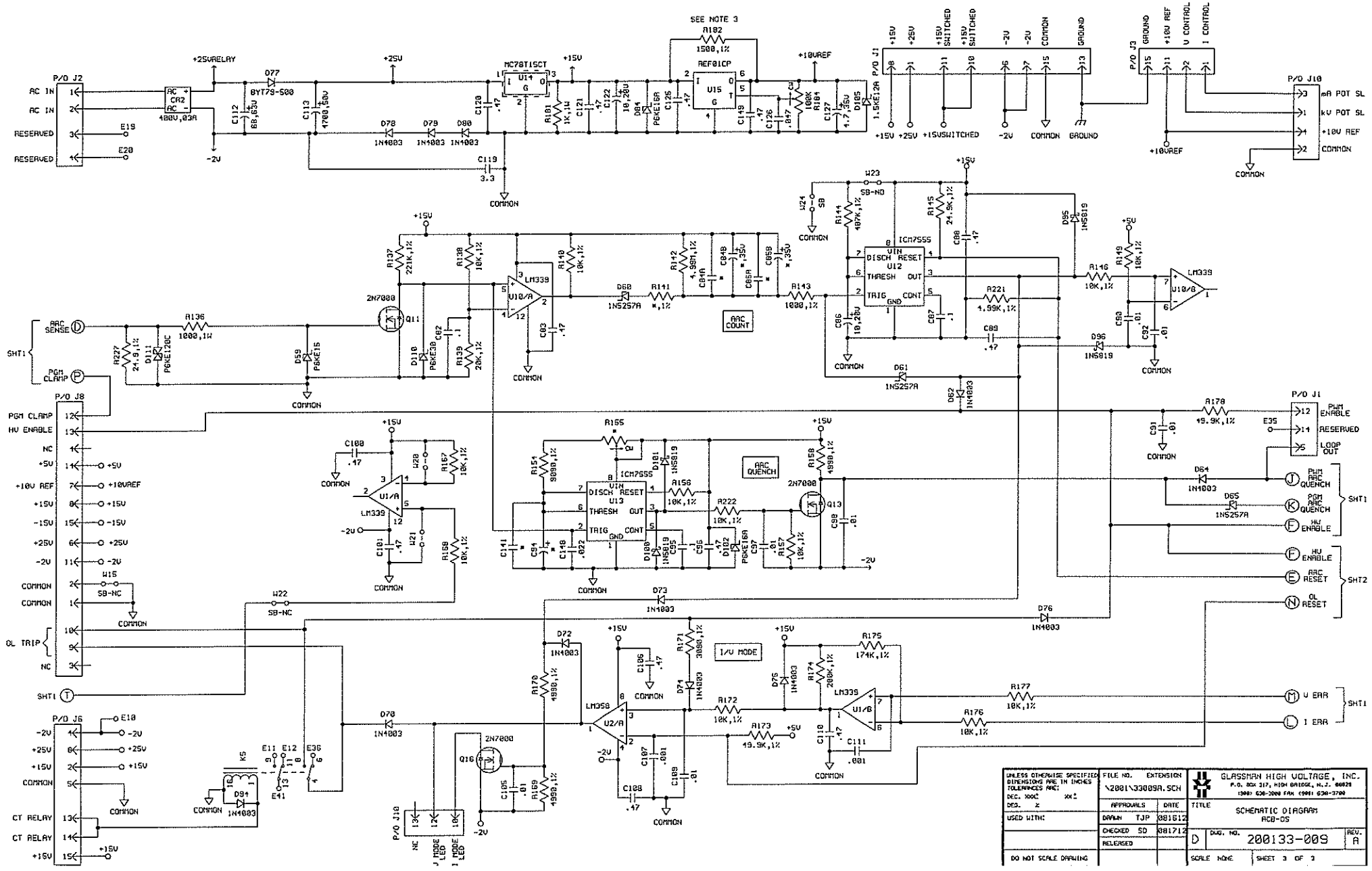
SEE NOTE 3
P/O J2
AC IN
AC IN
RESERVED
RESERVED
+25VRELAY
-2V
+25V
+15V
+10VREF
MC78T15CT
REF01CP
P/O J1
+15V +25V +15VSWITCHED -2V COMMON GROUND
P/O J3
GROUND +10V REF V CONTROL I CONTROL
P/O J10
mA POT SL
kV POT SL
+10V REF
COMMON
ARC SENSE
SHT1
PGM CLAMP
ARC COUNT
ICM7555
LM339
2N7000
P/O J8
PGM CLAMP
HV ENABLE
NC
+5V
+10V REF
+15V
-15V
+25V
-2V
COMMON
SB-NC
OL TRIP
SHT1
ARC QUENCH
I/V MODE
LM358
P/O J1
PWM ENABLE
RESERVED
LOOP OUT
PWM ARC QUENCH
PGM ARC QUENCH
HV ENABLE
ARC RESET
OL RESET
SHT2
V ERR
I ERR
P/O J6
CT RELAY
CT RELAY
P/O J10
NC
V MODE LED
I MODE LED
K5
1N4003
2N7000
UNLESS OTHERWISE SPECIFIED DIMENSIONS ARE IN INCHES TOLERANCES ARE:
DEC. XXX± XX±
DEG. ±
USED WITH:
DO NOT SCALE DRAWING
FILE NO. EXTENSION
\200133009A.SCH
APPROVALS DATE
DRAWN TJP 081612
CHECKED SD 081712
RELEASED
GLASSMAN HIGH VOLTAGE, INC.
P.O. BOX 317, HIGH BRIDGE, N.J. 08829
(908) 638-2000 FAX (908) 638-3700
TITLE
SCHEMATIC DIAGRAM
ACB-05
DWG. NO. 200133-009
REV. A
SCALE NONE
SHEET 3 OF 3

REV	BY	DESCRIPTION	DATE	APPROVED

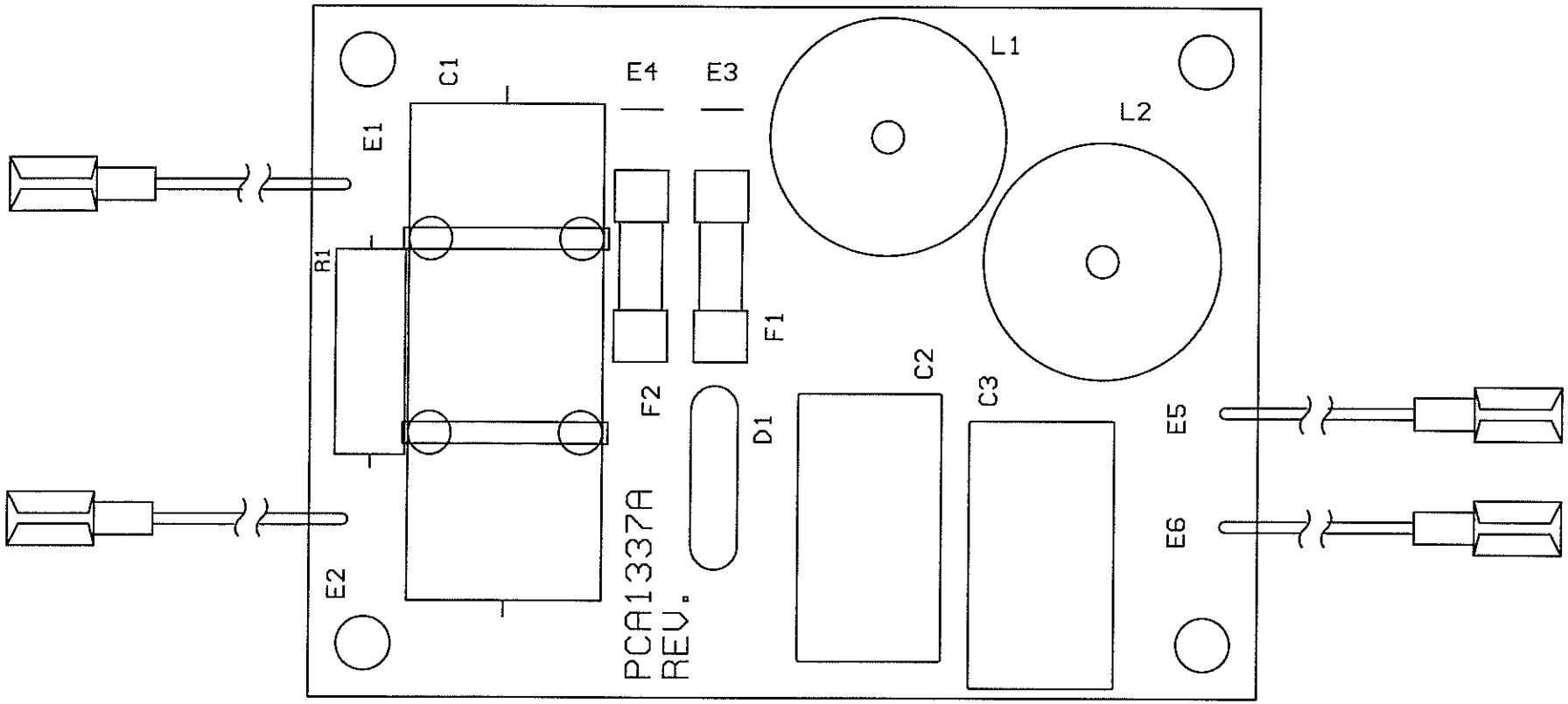

REDUCED ONLY

UNLESS OTHERWISE SPECIFIED DIMENSIONS ARE IN INCHES TOLERANCES ARE : DEC. XXX ± XX ± DEG. ±	FILE NO. EXTENSION \PCA1\337010#.PCB	GLASSMAN HIGH VOLTAGE, INC. P.O. BOX 317, HIGH BRIDGE, NJ 08829 (908)-638-3800 FAX (908)-638-3700
THIRD ANGLE PROJECTION	APPROVALS / DATE	TITLE PARTS PLACEMENT AFL-OS-2 (337A)
	DRAWN TJP 080912	
	CHECKED JHC 05/01/2	B DWG. NO. PCA1337-010 REV. NR
	RELEASED	
DO NOT SCALE DRAWING	SSF	SCALE NONE SHEET 1 OF 1

REV	BY	DESCRIPTION	DATE	APPROVED
A	MDS	ECN 5480	0[illegible]8	DJ
A-1	TJP	ADDRESS UPDATE	122310	HMS

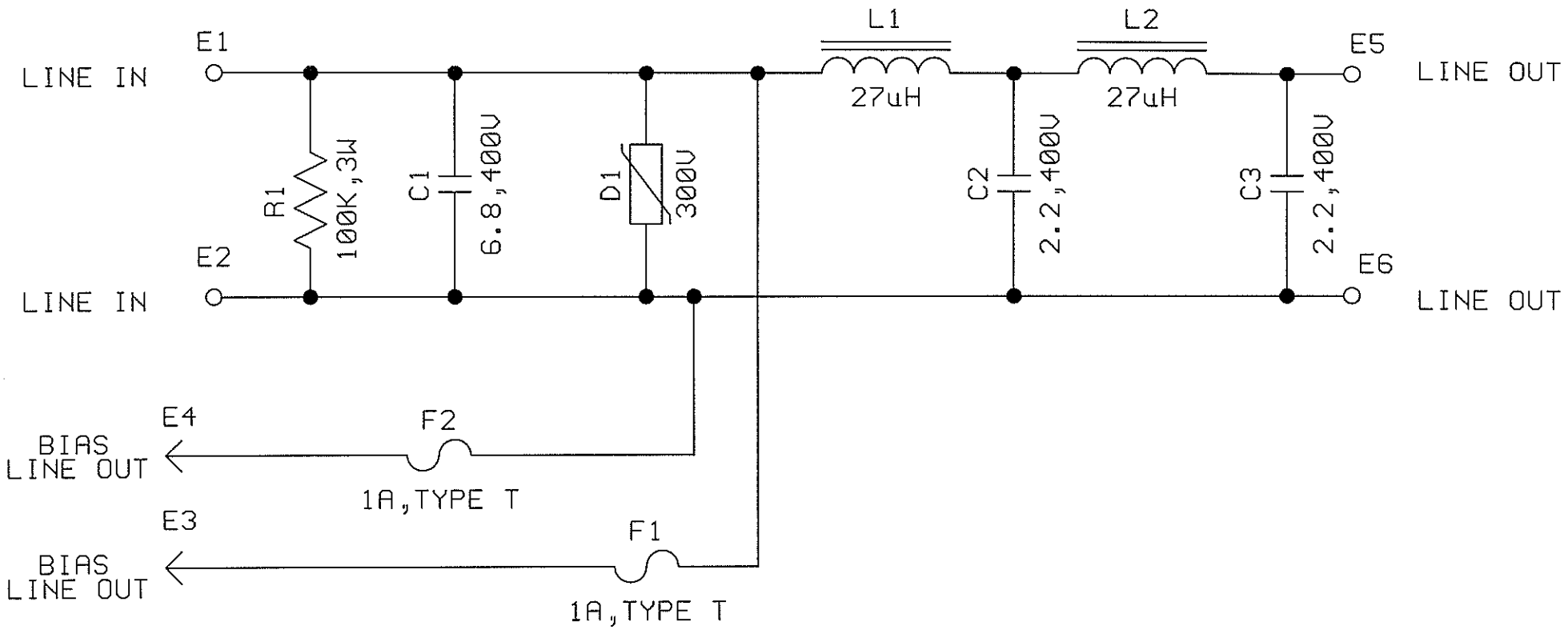

G.H.V., INC. RESERVES THE RIGHT TO SUBSTITUTE PARTS WITH THOSE OF SIMILAR OR BETTER PERFORMANCE.

NOTES

1 UNLESS OTHERWISE SPECIFIED:
ALL CAPS ARE IN uF.

FILE NO. EXTENSION		GLASSMAN HIGH VOLTAGE, INC. P.O. BOX 317, HIGH BRIDGE, NJ 08829 (908)-638-3800 FAX (908)-638-3700		
\1000\58002A1.SCH				
APPROVAL	DATE	TITLE	SCHEMATIC DIAGRAM AFL-OS-1-UL	
DRAWN TJM	042497			
CHECKED JS	042497	A	DWG. NO. 100058-002	REV. A-1
RELEASED		SCALE NONE	SHEET 1 OF 1	

REV	BY	DESCRIPTION	DATE	APPROVED
NR-1	JAG	ADDED 450KV-JY1	032714	

THIS SIDE UP

TOP VIEW

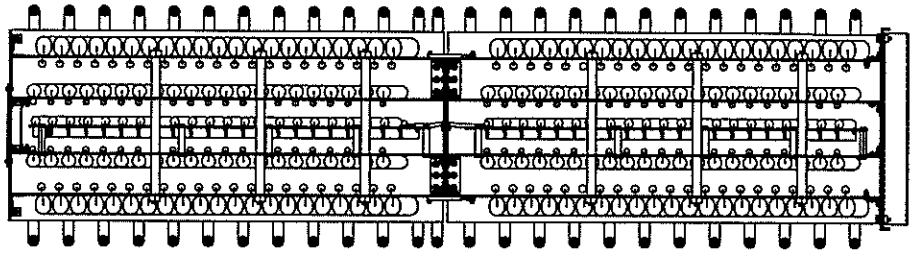

INSTALL

THIS SIDE UP

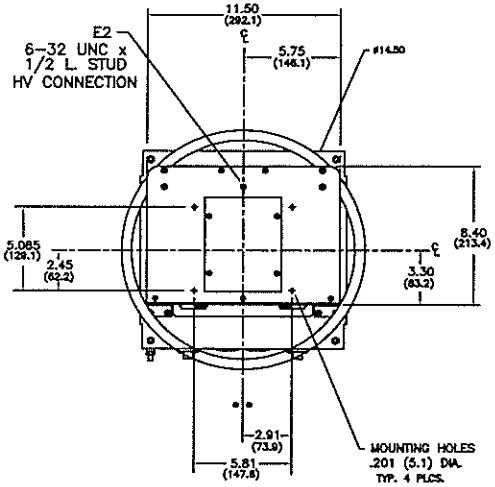

TOP/SIDE VIEW

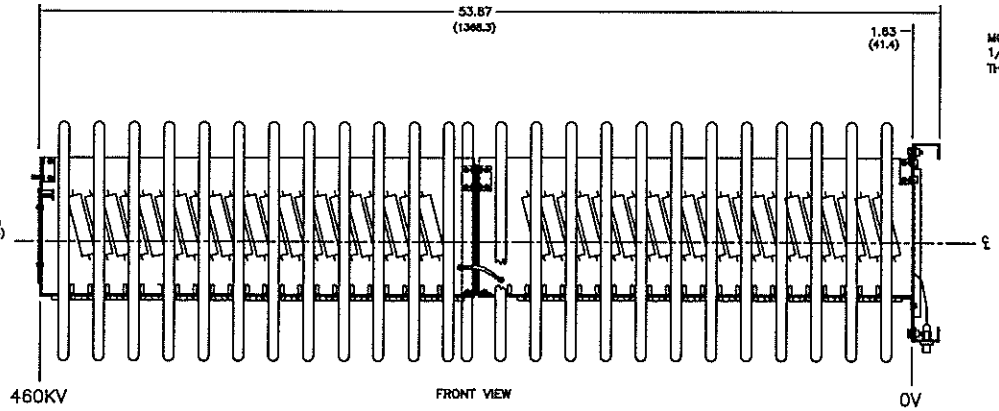

FRONT VIEW

INSTALL

THIS SIDE UP

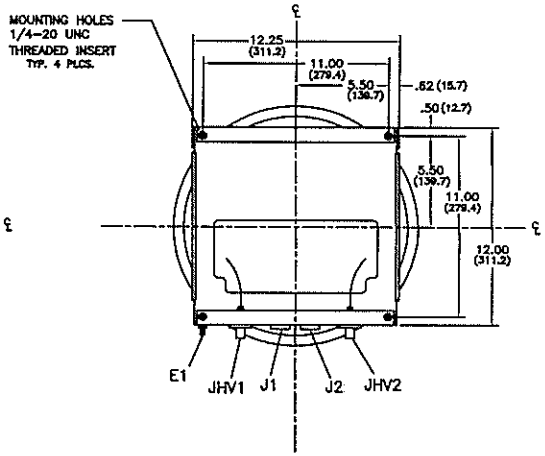

BOTTOM/SIDE VIEW

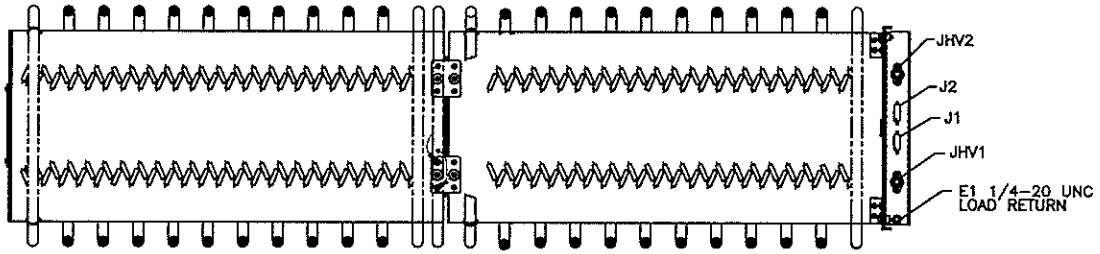

BOTTOM VIEW

HIGH VOLTAGE STACK ASSEMBLY

J1 – HIGH VOLTAGE INTERFACE
J2 – OPTION
JHV1 – HV AC #1
JHV2 – HV AC #2
E1 – LOAD RETURN GROUND STUD
E2 – HIGH VOLTAGE OUTPUT

UNLESS OTHERWISE SPECIFIED DIMENSIONS ARE IN INCHES TOLERANCES ARE: DEC. XXX ± XX ± DEG. ±	FILE NO. EXTENSION \1013\18008-1.DWG	GLASSMAN HIGH VOLTAGE, INC. P.O. BOX 317, HIGH BRIDGE, N.J. 08830 (908) 638-3600 FAX (908) 638-3700
THIRD ANGLE PROJECTION	APPROVALS / DATE	TITLE: OUTLINE & INSTALLATION SERIES OS, JX7 & JY1 OPTIONS HV STACK ASSEMBLY (450/460KV)
DO NOT SCALE DRAWING	DRWN JAG/TJP 012814	D DWG.NO. 101318-008 REV. NR-1
	CHECKED JAG 012814	
	RELEASED	SCALE NONE SHEET 1 OF 1

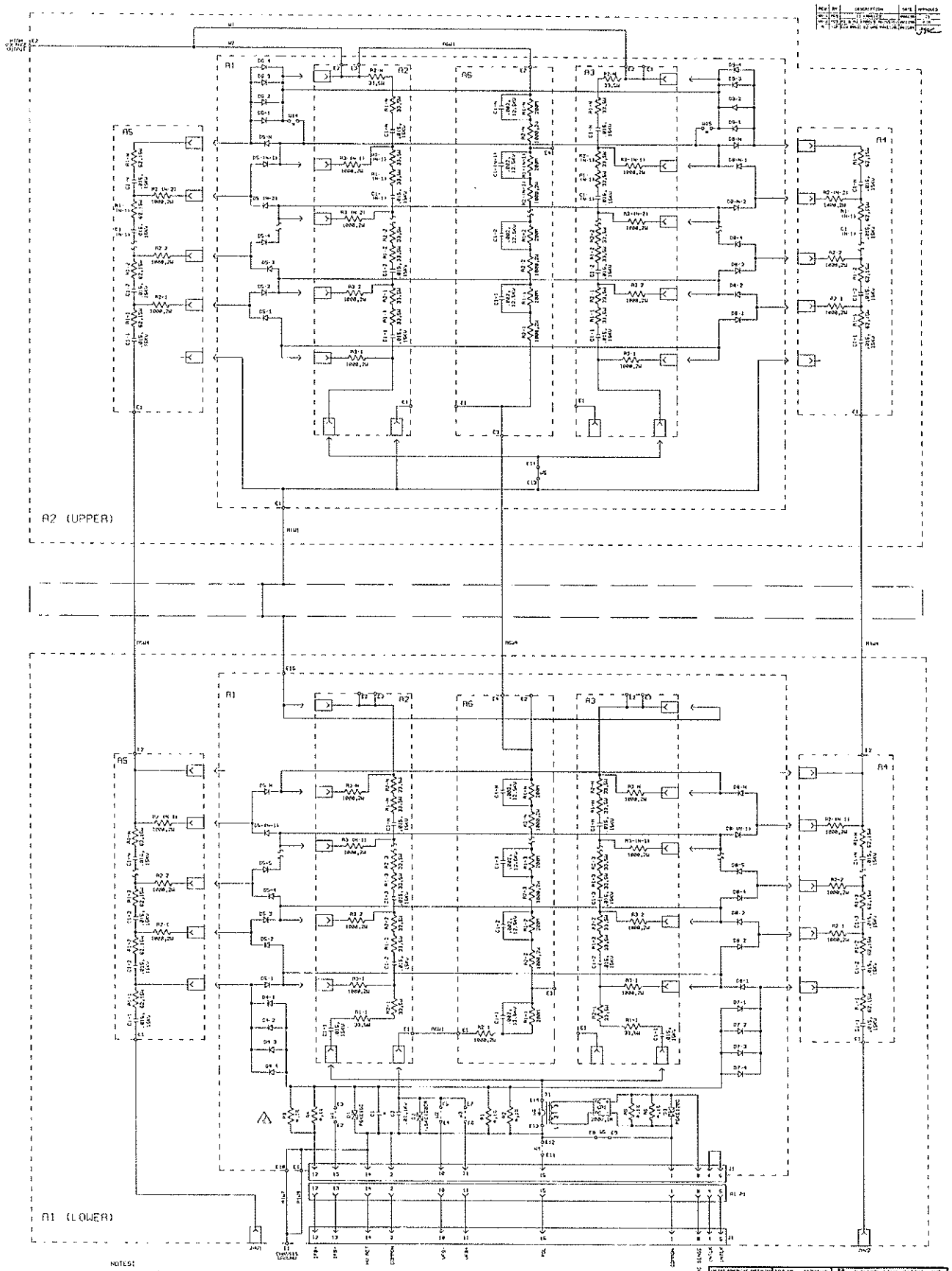
A2 (UPPER)
A1 (LOWER)
A1
A2
A3
A4
A5
A6
NOTES:
1. RIGHT ANGLE LINE DENOTES POSITIVE POLARITY, REVERSE FOR SCHOTTKY POLARITY.
2. FOR POSITIVE POLARITY R3 IS REPLACED WITH A JUMPER
3. UNLESS OTHERWISE SPECIFIED ALL CAPS ARE IN UF.
4. A VALUE PRIOR TO INSTALLATION SELECTED PER MODEL.
5. ELMICO, INC. GUARANTEES THE HIGH RF SURVEILLANCE KNEE WITH USE OF SPECIFIED OR BETTER PERFORMANCE.
SCHEMATIC DIAGRAM
MAX-DS SERIES
DSR-450MV OPEN STACK
200131-005
SCALE NONE
SHEET 1 OF 1

AHV1OS, 450 kV

This assembly is the same as AHV1OS (schematic # 200131-005), with the following schematic modifications:

1. All A4C1 capacitors are changed to 0.022 μF @ 14 kV.
2. All A5C1 capacitors are changed to 0.022 μF @ 14 kV.

REVISIONS				GLASSMAN HIGH VOLTAGE, INC. PO Box 317, High Bridge, NJ USA 08829 – www.GlassmanHV.com			
DESCRIPTION	CHK	DATE	LTR	FILE: 2001\31005\102#1.doc		SCHEMATIC MODIFICATION HIGH VOLTAGE ASSEMBLY AHV1OS, 450 kV	
Converted to word	WKT	030408	NR1			REFER TO DWG 200131-005	
				DRAWN HMD	DATE 102003	DWG NO 200131-005-102	REV NR-1
				CHECK DWS	DATE 102003	SHEET 1 OF 1	

REV	BY	DESCRIPTION	DATE	APPROVED
A	MDS	ECN 5524: TB2 PINS 4 THRU 12	032098	EJW
A-1	MDS	TITLE BLOCK TYPO	040998	JJC
A-2	TJP	ADDRESS UPDATE	030612	

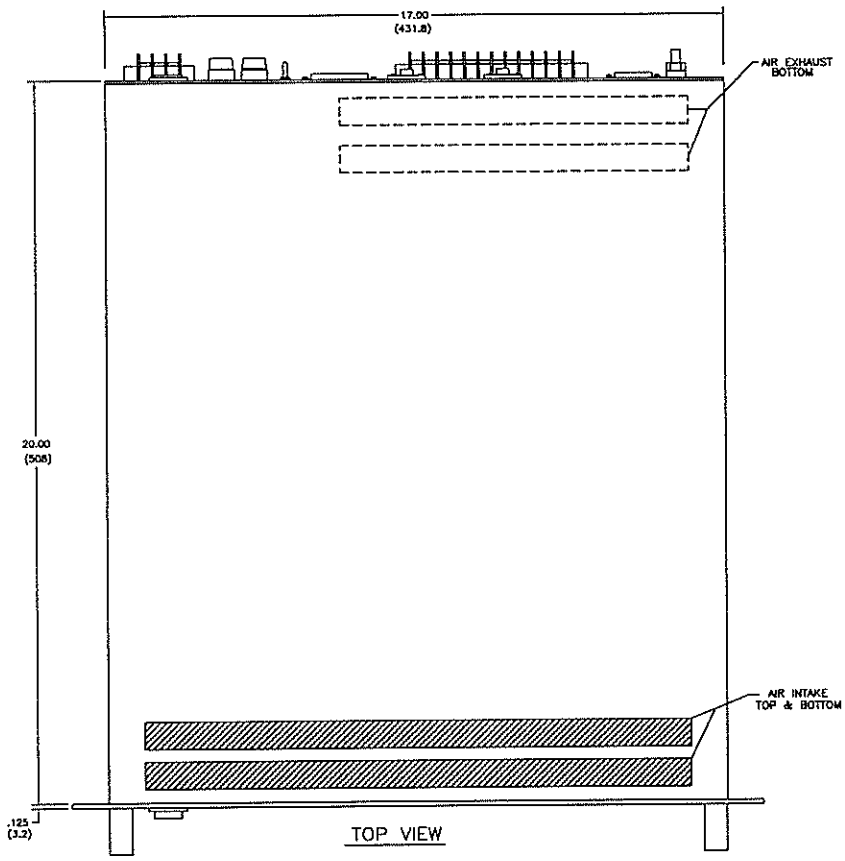

TOP VIEW

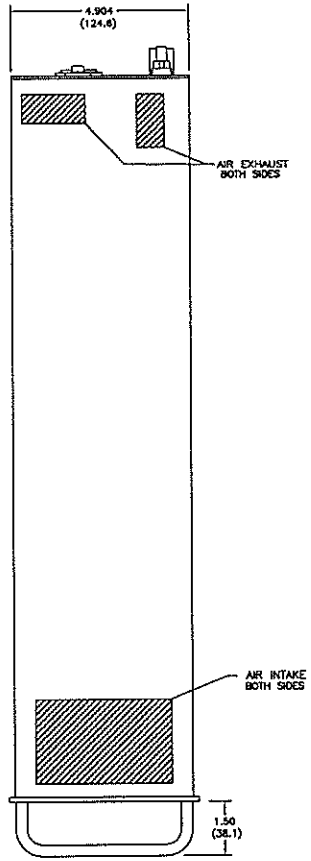

SIDE VIEW

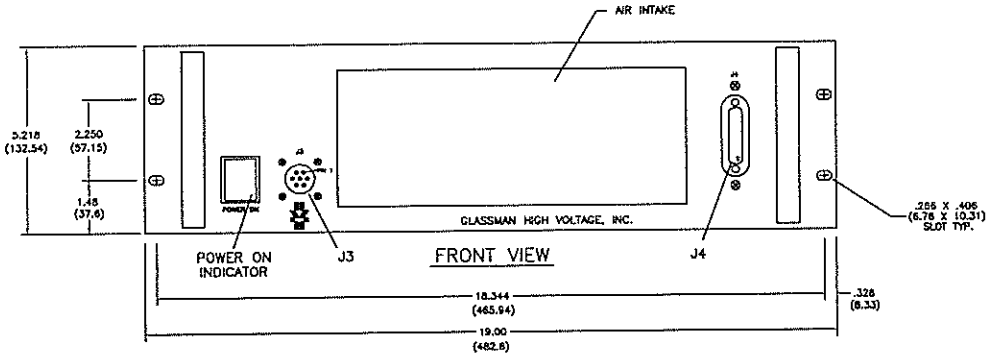

FRONT VIEW

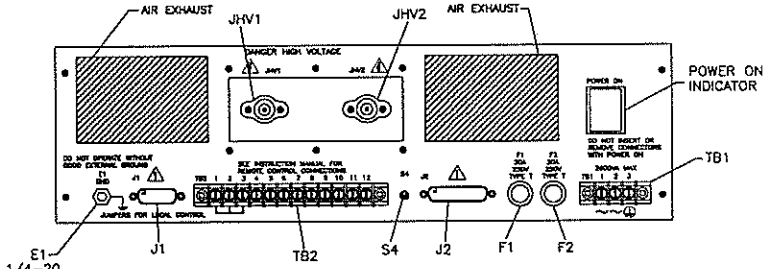

REAR VIEW

TB1: AC INPUT

1- AC LINE
2- AC LINE
3- GROUND

TB2: CUSTOMER SIGNAL INTERFACE

1- GROUND	7- RESERVED
2- COMMON	8- RESERVED
3- INTERLOCK	9- RESERVED
4- RESERVED	10- RESERVED
5- RESERVED	11- RESERVED
6- RESERVED	12- RESERVED

J1: HV STACK INTERFACE

J2: OPTION

J3: AC INTERFACE

J4: RP INTERFACE

JHV1: HVAC OUTPUT

JHV2: HVAC OUTPUT

S4: OPTION

IN
(MM)

UNLESS OTHERWISE SPECIFIED DIMENSIONS ARE IN INCHES TOLERANCES ARE :
DCC. XXX ± XX ±
DEG. ±

THIRD ANGLE PROJECTION

DO NOT SCALE DRAWING

FILE NO. EXTENSION
\1013\17001A2.DWG

APPROVALS		DATE
DRAWN	TA	073097
CHECKED	JMC	073097
RELEASED		

GLASSMAN HIGH VOLTAGE, INC.
P.O. BOX 317, HIGH BRIDGE, NJ 08829
(908)-638-3600 FAX (908)-638-3700

TITLE OUTLINE & INSTALLATION
DRIVER ASSEMBLY
AM5-OS-1

D DWG.NO. 101317-001 REV. A-2

SCALE NONE SHEET 1 OF 1

REV	BY	DESCRIPTION	DATE	APPROVED
A	TLA	ECN 52182 DELETED AG	082587	JJCIII
B	MDS	ECN 52261 PROTOTYPE CHANGES	092587	JM
C	MDS	ECN 53441 AMPS, E2, E5 & E6 POINTS SOLDERED	121687	JM
D	TJM	ECN 55241 REMOVED J8 & FIXED TEXT.	032590	JS
E	EJM	ECN 55981 AC INPUT WAS 187-253VAC	021995	JMS

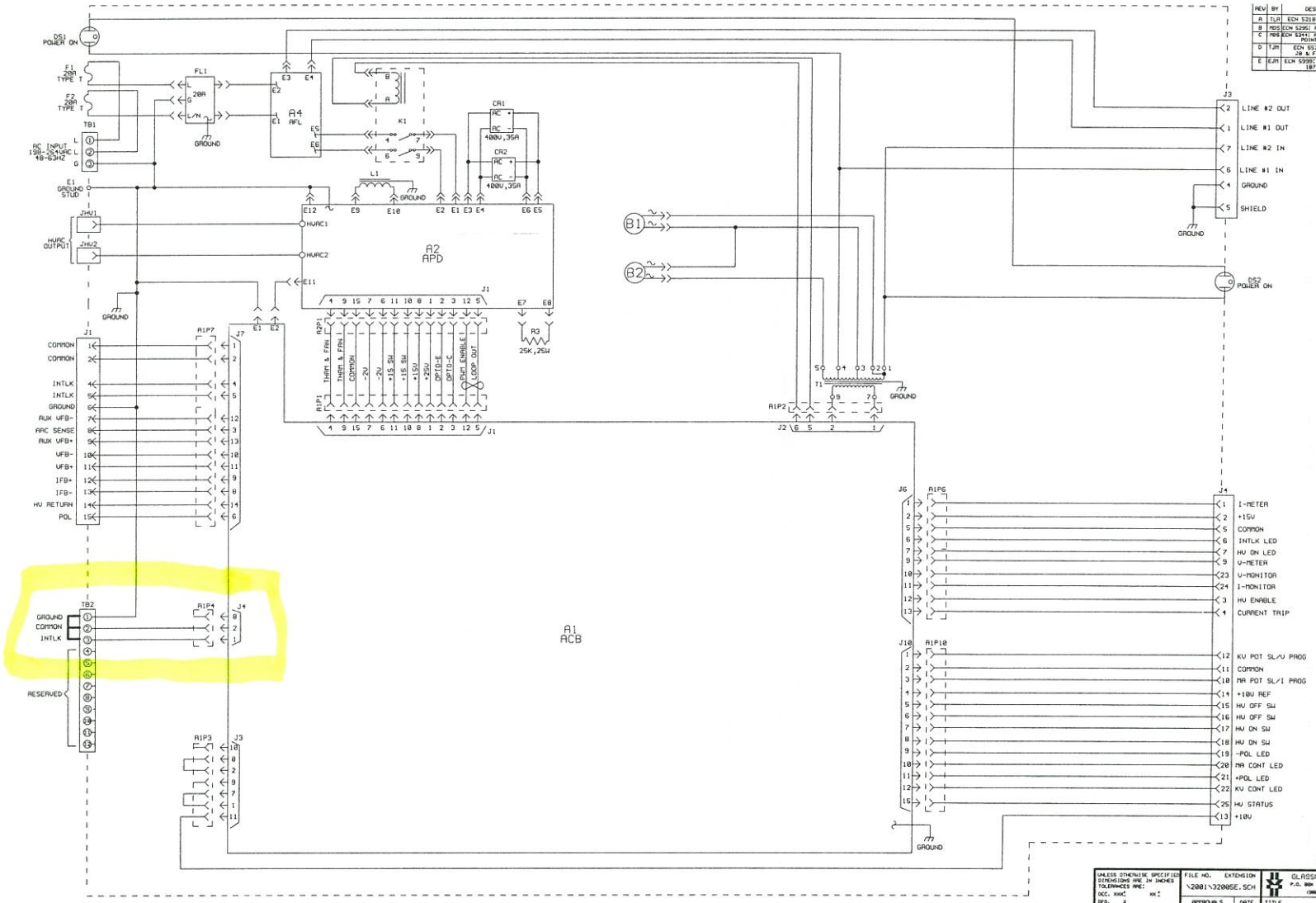

REDUCED ONLY

UNLESS OTHERWISE SPECIFIED DIMENSIONS ARE IN INCHES
TOLERANCES ARE:
DEC. XXX± XX±
DEG. X

USED WITH:

DO NOT SCALE DRAWING

FILE NO.	EXTENSION
\2001\32005E.SCH	

APPROVALS	DATE
DRAWN TJM	073097
CHECKED JS	081697
RELEASED	

GLASSMAN HIGH VOLTAGE, INC.
P.O. BOX 551, WHITEHOUSE STATION, N.J. 08889
(908) 534-3067 FAX (908) 534-0672

TITLE: SCHEMATIC DIAGRAM AMS-OS-1

D DWG. NO. 200132-005 REV. E

SCALE NONE SHEET 1 OF 1

G.H.V., INC. RESERVES THE RIGHT TO SUBSTITUTE PARTS WITH THOSE OF SIMILAR OR BETTER PERFORMANCE.

REV	BY	DESCRIPTION	DATE	APPROVED
A	TLR	ECN 5198: MOVED J2 PIN 1	082797	JS
B	MDS	ECN 5344: CABLE CLAMPS WERE SHOWN	011398	JJCH
C	MDS	ECN 5480: A4E1, E2, E5 & E6 TERMINALS CHANGED	030698	DJ
D	JAG	ECN 8480: ADDED 1 & 2 TO L1	110209	

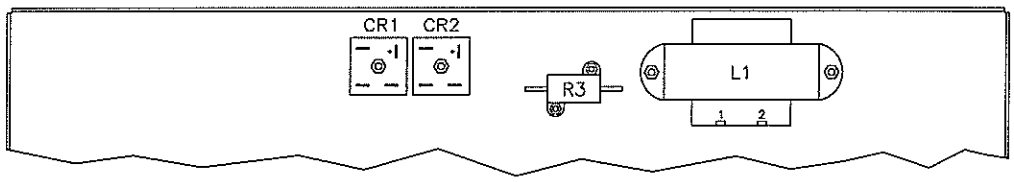

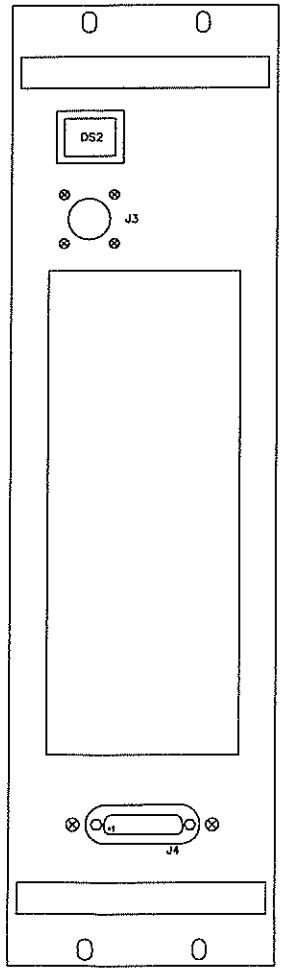

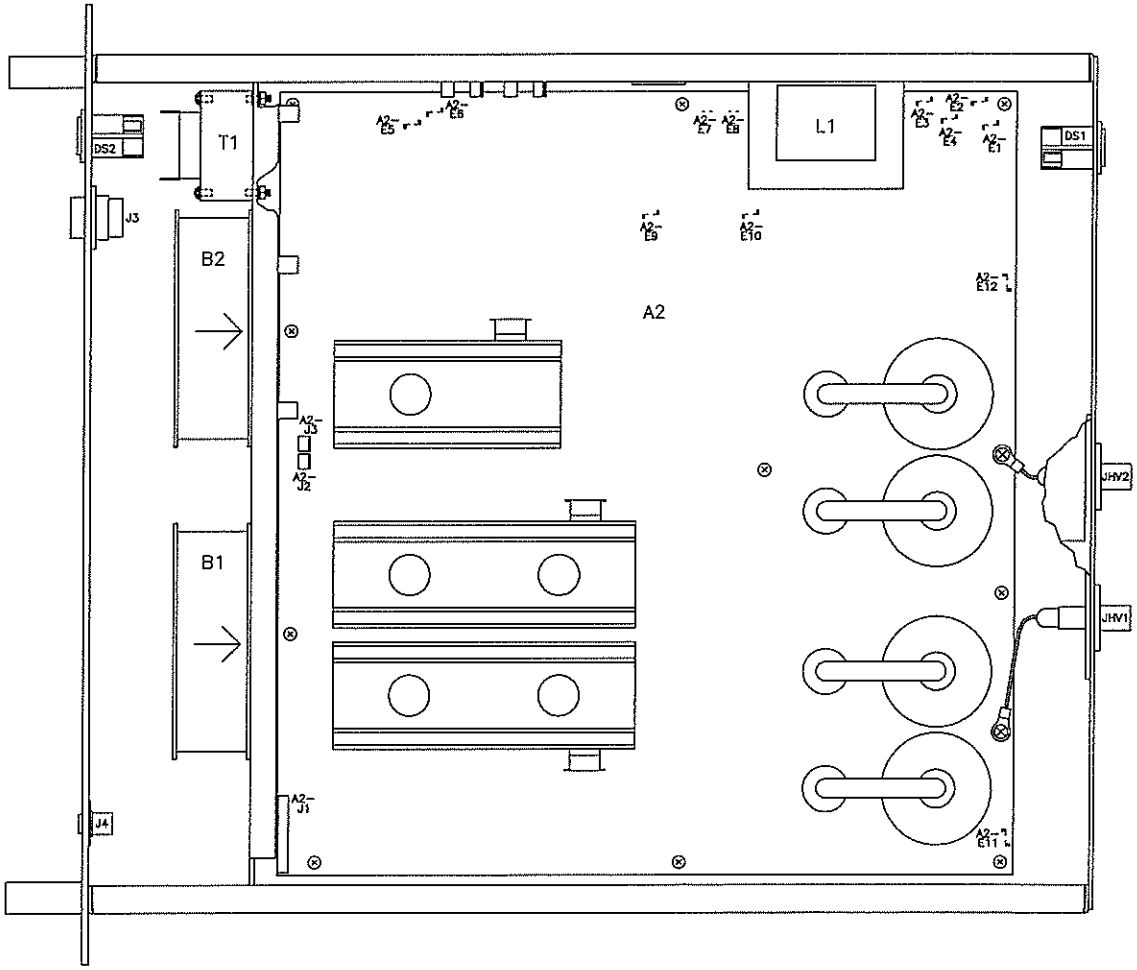

UNLESS OTHERWISE SPECIFIED DIMENSIONS ARE IN INCHES TOLERANCES ARE : DEC. XXX ± XX ± DEG. ±	FILE NO. EXTENSION \2013\410070.DWG	GLASSMAN HIGH VOLTAGE, INC. P.O. BOX 317, HIGH BRIDGE, N.J. 08829 (908) 638-3800 FAX (908) 638-3700
THIRD ANGLE PROJECTION	APPROVALS / DATE: DRAWN TA 073097; CHECKED JMC 080297; RELEASED	TITLE: PARTS PLACEMENT AM5-OS TOP
DO NOT SCALE DRAWING		D — DWG.NO. 201341-007 — REV. D
		SCALE NONE — SHEET 1 OF 2

REV	BY	DESCRIPTION	DATE	APPROVED
		SEE SHEET 1		

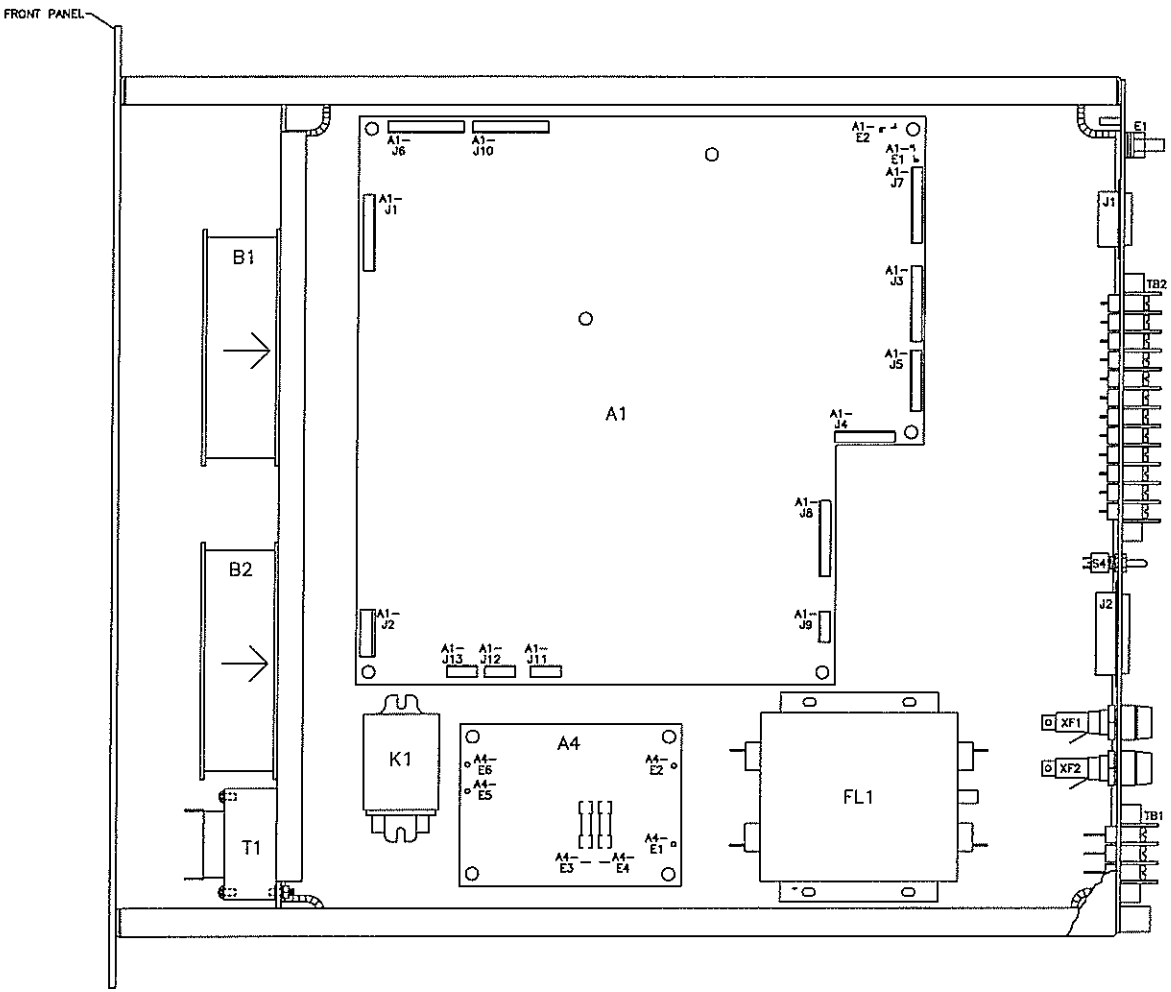

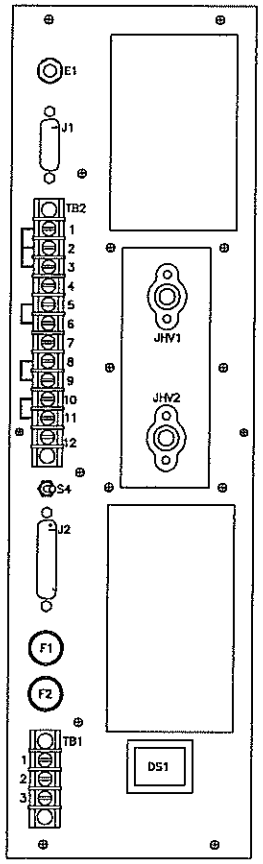

UNLESS OTHERWISE SPECIFIED DIMENSIONS ARE IN INCHES TOLERANCES ARE : DEC. XXX ± XX ± DEG. ±	FILE NO. EXTENSION \2013\41007D.DWG	GLASSMAN HIGH VOLTAGE, INC. P.O. BOX 312, HIGH BRIDGE, N.J. 08829 (908) 638-3800 FAX (908) 638-3700	
	APPROVALS / DATE	TITLE PARTS PLACEMENT AM5-OS BOTTOM	
	DRAWN TA 073097		
THIRD ANGLE PROJECTION	CHECKED JMC 080297	D DWG.NO. 201341-007	REV. D
DO NOT SCALE DRAWING	RELEASED	SCALE NONE	SHEET 2 OF 2

REV	BY	DESCRIPTION	DATE	APPROVED
A	TJM	ECN 5224: ADDED DRIVER AND REMOTE CONTROL ASSEMBLY	032798	JS
B	MDS	ECN 5232: TB1-7 (PIN 7) & TB1-10 (PIN 10) ERROR FROM ECN 5224	040938	JS
C	MDS	ECN 5817: "+10V REFERENCE" WAS "REFERENCE OUT"	092398	DWS
C-1	PM	UPDATED ADDRESS	061703	MDS
D	TJP	ECN 9267: FIGURE 8 SOURCE REMOVED	042808	MDS

REMOTE INTERLOCK — FIGURE 1

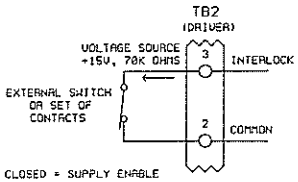

CLOSED = SUPPLY ENABLE
OPEN = SUPPLY DISABLE

HV ENABLE - REMOTE CONTROL ASSEMBLY — FIGURE 2

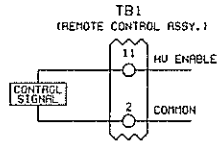

CONTROL SIGNAL
1 - HIGH VOLTAGE ENABLE (MIN 2.5VDC, MAX 15VDC)
0 - HIGH VOLTAGE DISABLE (MIN 0V, MAX 1.5VDC)
INPUT CHARACTERISTICS > 280K OHMS (0-5V); 0.5MA @ 10VDC

VOLTAGE PROGRAM - REMOTE CONTROL ASSEMBLY — FIGURE 3

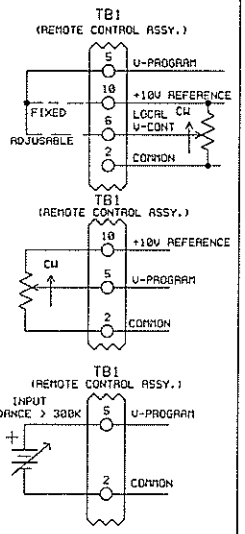

VOLTAGE PROGRAM TO MAXIMUM BY CONNECTING TO REFERENCE TERMINAL OR ADJUSTABLE BY CONNECTING TO LOCAL V-CONTROL TERMINAL

REMOTE VOLTAGE PROGRAMMED BY ATTACHING A 10K TO 50K POTENTIOMETER BETWEEN REFERENCE AND COMMON WITH THE WIPER ARM TO VOLTAGE PROGRAMMING.

THE SUPPLY MAY BE PROGRAMMED WITH A REMOTE 0-10VDC VOLTAGE WHICH IS POSITIVE WITH RESPECT TO SYSTEM COMMON.

CURRENT PROGRAM - REMOTE CONTROL ASSEMBLY — FIGURE 4

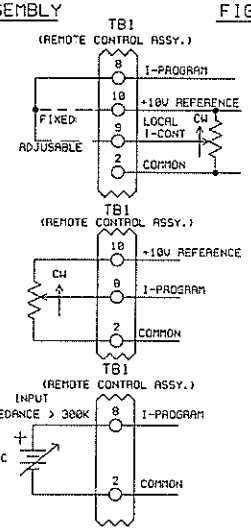

LOCAL ADJUSTABLE OR FIXED CURRENT PROGRAMMING

REMOTE CURRENT PROGRAMMED BY ATTACHING A 10K TO 50K POTENTIOMETER BETWEEN REFERENCE AND COMMON WITH THE WIPER ARM TO CURRENT PROGRAMMING.

THE SUPPLY MAY BE PROGRAMMED WITH A REMOTE 0-10VDC VOLTAGE WHICH IS POSITIVE WITH RESPECT TO SYSTEM COMMON.

VOLTAGE MONITOR - REMOTE CONTROL ASSEMBLY — FIGURE 5

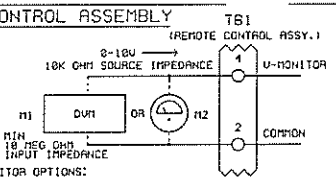

V-MONITOR OPTIONS:
RECOMMENDED
M1 0-10VDC VOLTMETER >/= 10 MEG OHM IMPEDANCE
0-10V IS DIRECTLY PROPORTIONAL
TO 0-MAX KV RATING.
ALTERNATE
M2 0-1MA CURRENT METER
0-1MA IS DIRECTLY PROPORTIONAL
TO 0-MAX KV RATING.

CURRENT MONITOR - REMOTE CONTROL ASSEMBLY — FIGURE 6

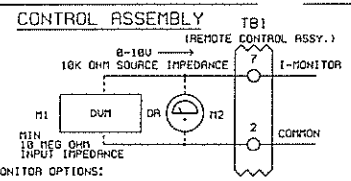

I-MONITOR OPTIONS:
RECOMMENDED
M1 0-10VDC VOLTMETER >/= 10 MEG OHM IMPEDANCE
0-10V IS DIRECTLY PROPORTIONAL
TO 0-MAX OUTPUT CURRENT RATING.
ALTERNATE
M2 0-1MA CURRENT METER
0-1MA IS DIRECTLY PROPORTIONAL
TO 0-MAX OUTPUT CURRENT RATING.

COMMON AND GROUND — FIGURE 7

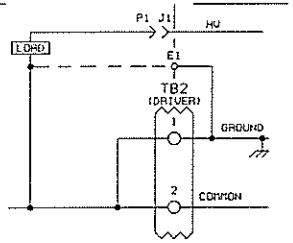

SYSTEM COMMON AND GROUND ARE NORMALLY TERMINATED TOGETHER. IN THIS CONFIGURATION, SIGNAL RETURNS AND LOAD RETURN CAN BE CONNECTED EITHER TO GROUND OR COMMON.

HV STATUS — FIGURE 8

DRIVE CAPABILITY =
SINK - 50MA AT 0.4V
HIGH SIGNAL = HV ENABLE
LOW SIGNAL = HV DISABLE

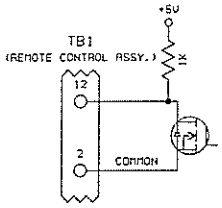

A TYPICAL OS INSTALLATION * — FIGURE 9

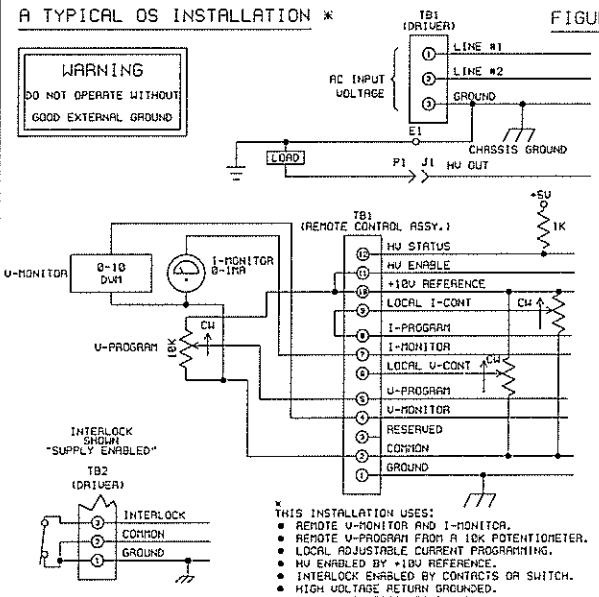

*
THIS INSTALLATION USES:
- REMOTE V-MONITOR AND I-MONITOR.
- REMOTE V-PROGRAM FROM A 10K POTENTIOMETER.
- LOCAL ADJUSTABLE CURRENT PROGRAMMING.
- HV ENABLED BY +10V REFERENCE.
- INTERLOCK ENABLED BY CONTACTS OR SWITCH.
- HIGH VOLTAGE RETURN GROUNDED.
- GROUND CONNECTED TO COMMON.
- HV STATUS OUTPUT (TTL SIGNAL. 1K OHM INTERNAL PULL-UP RESISTOR).

MINIMUM NUMBER OF CONNECTIONS IN ORDER TO COMPLETELY ENABLE THE OS SUPPLY * — FIGURE 10

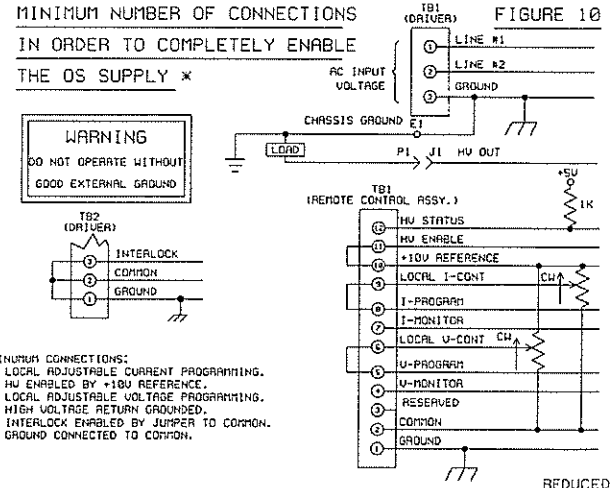

*
MINIMUM CONNECTIONS:
- LOCAL ADJUSTABLE CURRENT PROGRAMMING.
- HV ENABLED BY +10V REFERENCE.
- LOCAL ADJUSTABLE VOLTAGE PROGRAMMING.
- HIGH VOLTAGE RETURN GROUNDED.
- INTERLOCK ENABLED BY JUMPER TO COMMON.
- GROUND CONNECTED TO COMMON.

REDUCED ONLY

UNLESS OTHERWISE SPECIFIED DIMENSIONS ARE IN INCHES TOLERANCES ARE: DEC. .XXX± .XX± DEG. ±	FILE NO. EXTENSION \4000\410390.SCH	GLASSMAN HIGH VOLTAGE, INC. P.O. BOX 317, HIGH BRIDGE, N.J. 08829 (908) 638-3600 FAX (908) 638-3700
MATERIAL	APPROVALS / DATE	TITLE INTERFACE DIAGRAM OS SERIES
	DRAWN MDS 061837	
FINISH	CHECKED SD 061837	D DWG. NO. 400041-039 REV. D
	RELEASED	
DO NOT SCALE DRAWING		SCALE NONE SHEET 1 OF 1

REV	BY	DESCRIPTION	DATE	APPROVED
A	TJP	ECN 9914: FIXED DETAILS	090512	HKS

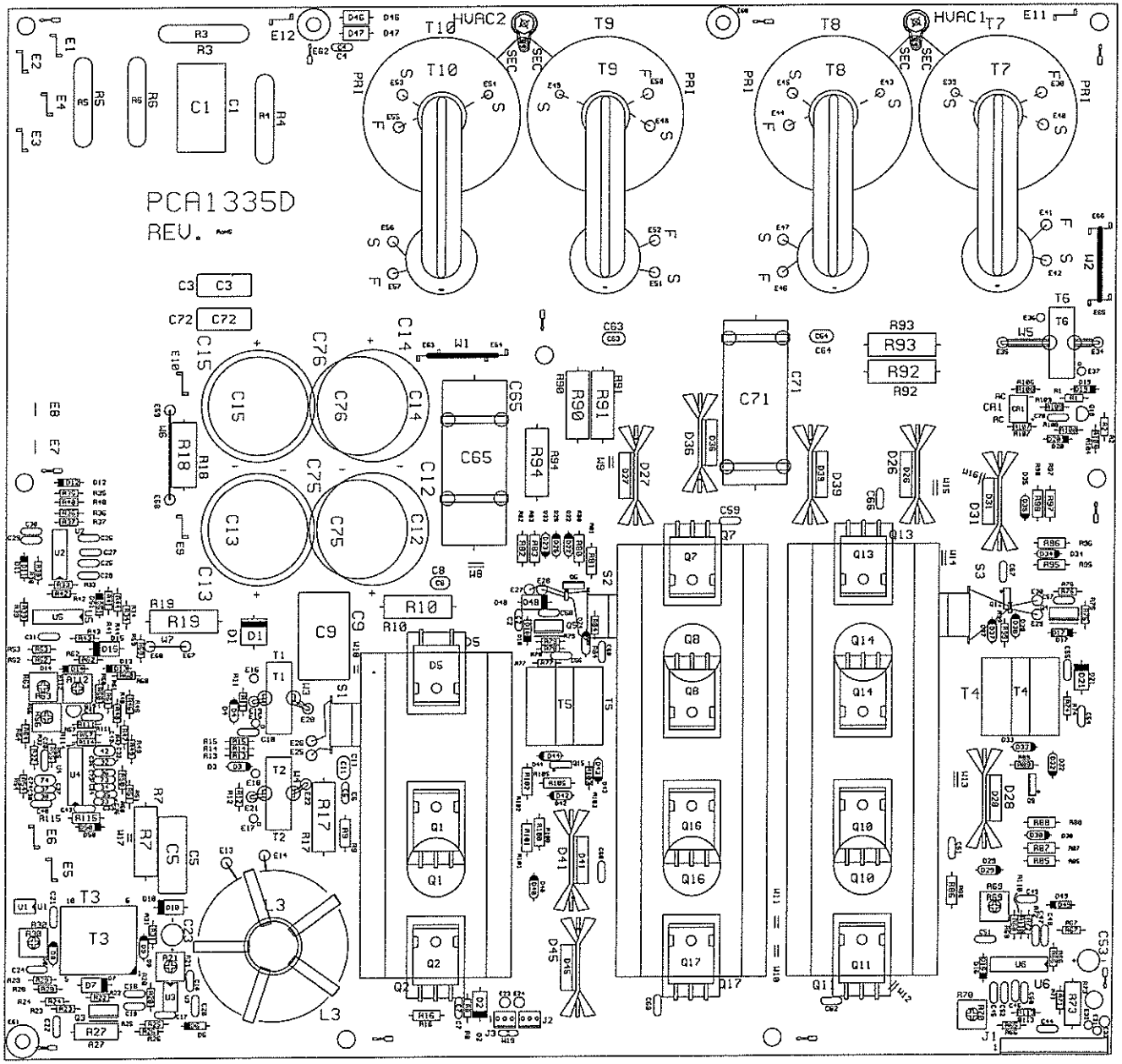

REDUCED

UNLESS OTHERWISE SPECIFIED DIMENSIONS ARE IN INCHES TOLERANCES ARE : DEC. XXX± XX± DEG. ±	FILE NO. EXTENSION \PCA1\335015A.PCB
	APPROVALS / DATE
THIRD ANGLE PROJECTION	DRAWN JAG 081312
	CHECKED JMC 081312
	RELEASED
DO NOT SCALE DRAWING	SSF

GLASSMAN HIGH VOLTAGE, INC.
P.O. BOX 317, HIGH BRIDGE, N.J. 08829
(908) 638-3800 FAX (908) 638-3700

TITLE PARTS PLACEMENT
APD-OS-1

C DWG.NO. PCA1335-015 REV. A

SCALE NONE SHEET 1 OF 1

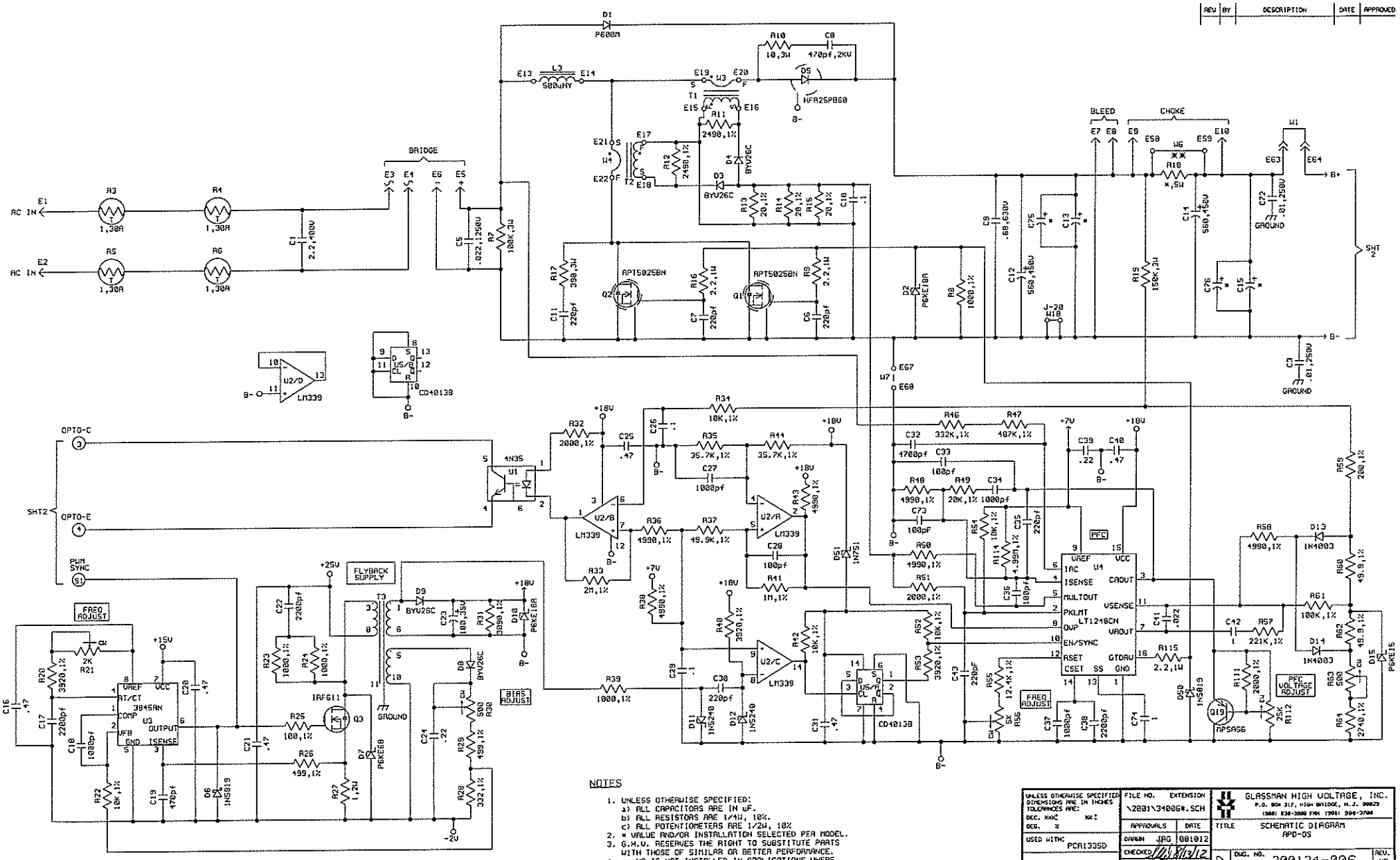
REV | BY | DESCRIPTION | DATE | APPROVED
AC IN
BRIDGE
BLEED
CHOKE
B+
B-
SHT 2
GROUND
APT5025BN
LM339
CD4013B
4N35
OPTO-C
OPTO-E
SHT2
PWM SYNC
FREQ ADJUST
FLYBACK SUPPLY
BIAS ADJUST
PFC
LT1248CN
PFC VOLTAGE ADJUST
IRF611
3845AN
NPSA56
-2V
NOTES
1. UNLESS OTHERWISE SPECIFIED:
a) ALL CAPACITORS ARE IN uF.
b) ALL RESISTORS ARE 1/4W, 10%.
c) ALL POTENTIOMETERS ARE 1/2W, 10%
2. * VALUE AND/OR INSTALLATION SELECTED PER MODEL.
3. G.H.V. RESERVES THE RIGHT TO SUBSTITUTE PARTS WITH THOSE OF SIMILAR OR BETTER PERFORMANCE.
4. ** W5 IS NOT INSTALLED IN APPLICATIONS WHERE EXTERNAL CHOKE IS USED.
UNLESS OTHERWISE SPECIFIED DIMENSIONS ARE IN INCHES TOLERANCES ARE:
USED WITH: PCA1335D
DO NOT SCALE DRAWING
FILE NO. EXTENSION \2001\34006#.SCH
APPROVALS DATE
DRAWN JRG 081012
CHECKED
RELEASED
GLASSMAN HIGH VOLTAGE, INC.
P.O. BOX 317, HIGH BRIDGE, N.J. 08829
(908) 638-3000 FAX (908) 638-3700
TITLE SCHEMATIC DIAGRAM APD-05
D DWG. NO. 200134-006 REV. NA
SCALE NONE SHEET 1 OF 2

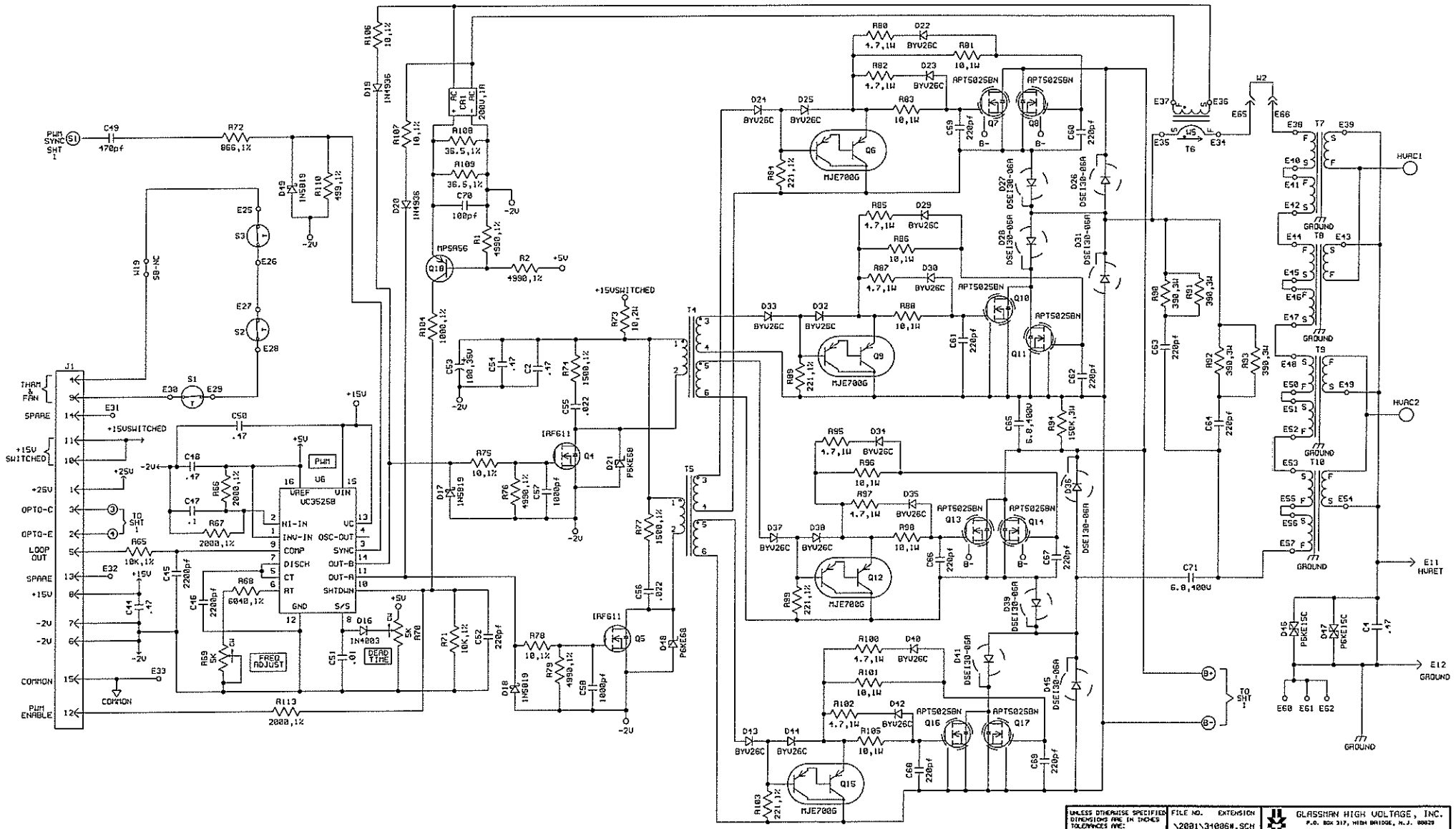

UNLESS OTHERWISE SPECIFIED DIMENSIONS ARE IN INCHES TOLERANCES ARE: DEC. XXX± XX± DEG. ±	FILE NO. EXTENSION \2001\34006W.SCH	GLASSMAN HIGH VOLTAGE, INC. P.O. BOX 317, HIGH BRIDGE, N.J. 08829 (908) 638-3000 FAX (908) 638-3700	
	APPROVALS DATE	TITLE	SCHEMATIC DIAGRAM APD-DS
USED WITH: PCA1335D	DRAWN JGG 081012		
	CHECKED	D	DWG. NO. 200134-006 REV. NA
	RELEASED		
DO NOT SCALE DRAWING		SCALE NONE	SHEET 2 OF 2

REV	BY	DESCRIPTION	DATE	APPROVED
A	MDS	ECN 5524: "ON" & "HV ON" INDICATED, S4 DESCRIBED	031698	EJM
B	MDS	ECN 5633: TB1-3	040998	JJC
B-1	MDS	FIXED LEADER LINES	082598	DWS
B-2	TJP	ADDRESS UPDATE	030612	HWS

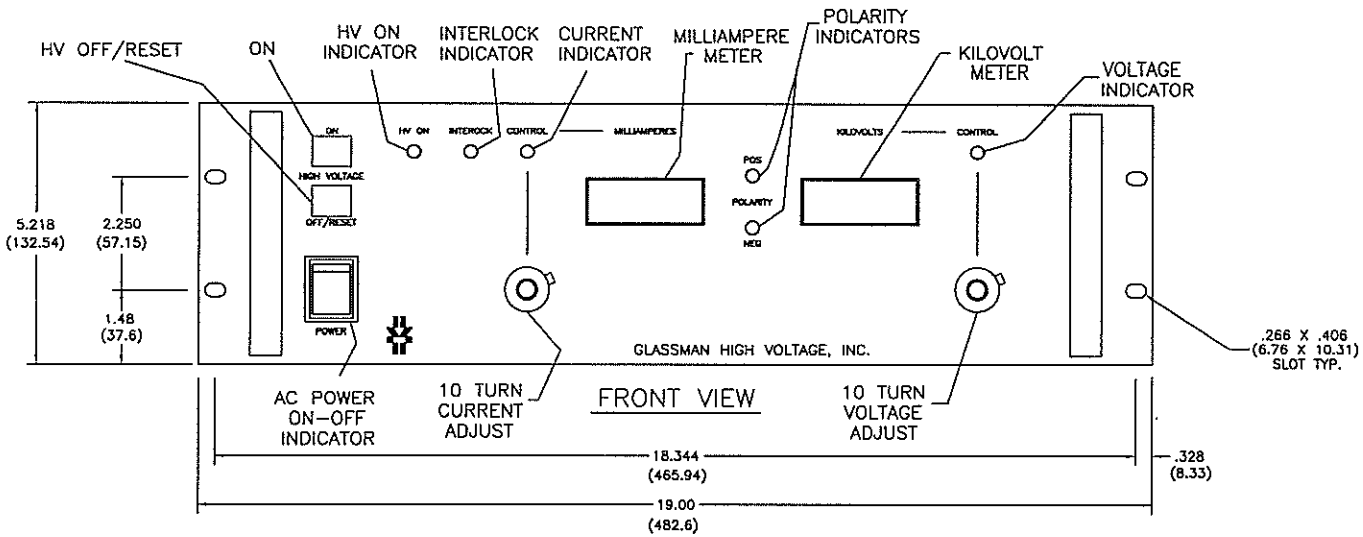

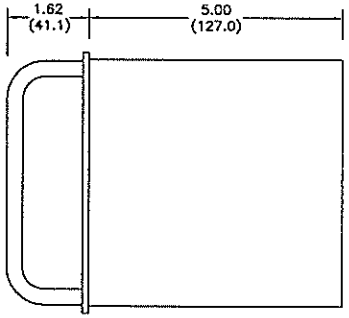

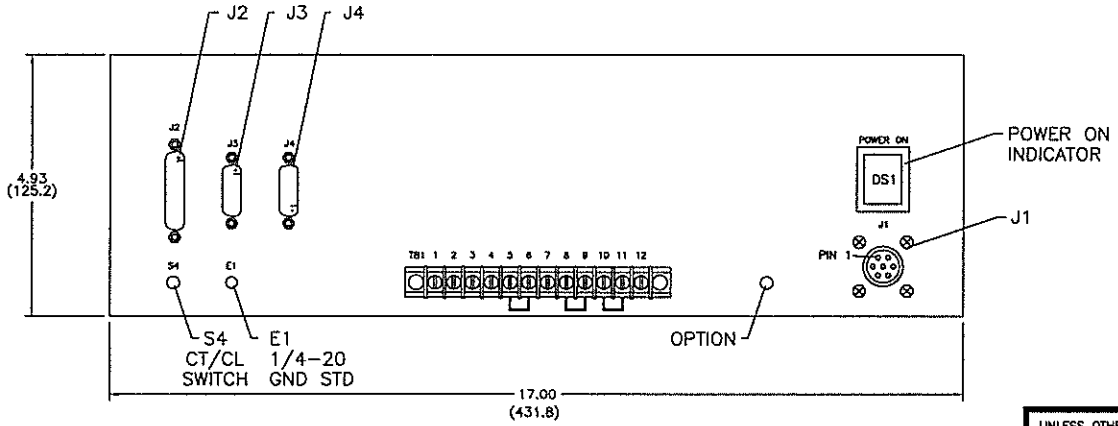

J1	J2	J3
AC INTERFACE	DRIVER INTERFACE	OPTION

J4	TB1
OPTION	CUSTOMER INTERFACE

1 – GROUND
2 – COMMON
3 – RESERVED
4 – V MON
5 – V PROG
6 – LOCAL V CONT
7 – I MON
8 – I PROG
9 – LOCAL I CONT
10 – +10V
11 – HV ENABLE
12 – HV STATUS

UNLESS OTHERWISE SPECIFIED DIMENSIONS ARE IN INCHES
TOLERANCES ARE :
DEC. XXX ± XX ±
DEG. ±

THIRD ANGLE PROJECTION

DO NOT SCALE DRAWING

FILE NO. EXTENSION
\1013\16001B2.DWG

APPROVALS		DATE
DRAWN	TA	073097
CHECKED	JMC	082797
RELEASED		

GLASSMAN HIGH VOLTAGE, INC.
P.O. BOX 317, HIGH BRIDGE, NJ 08829
(908)-638-3800 FAX (908)-638-3700

TITLE: OUTLINE & INSTALLATION REMOTE CONTROL ASSY RP-OS-01

B DWG.NO. 101316-001 REV. B-2

SCALE NONE SHEET 1 OF 1

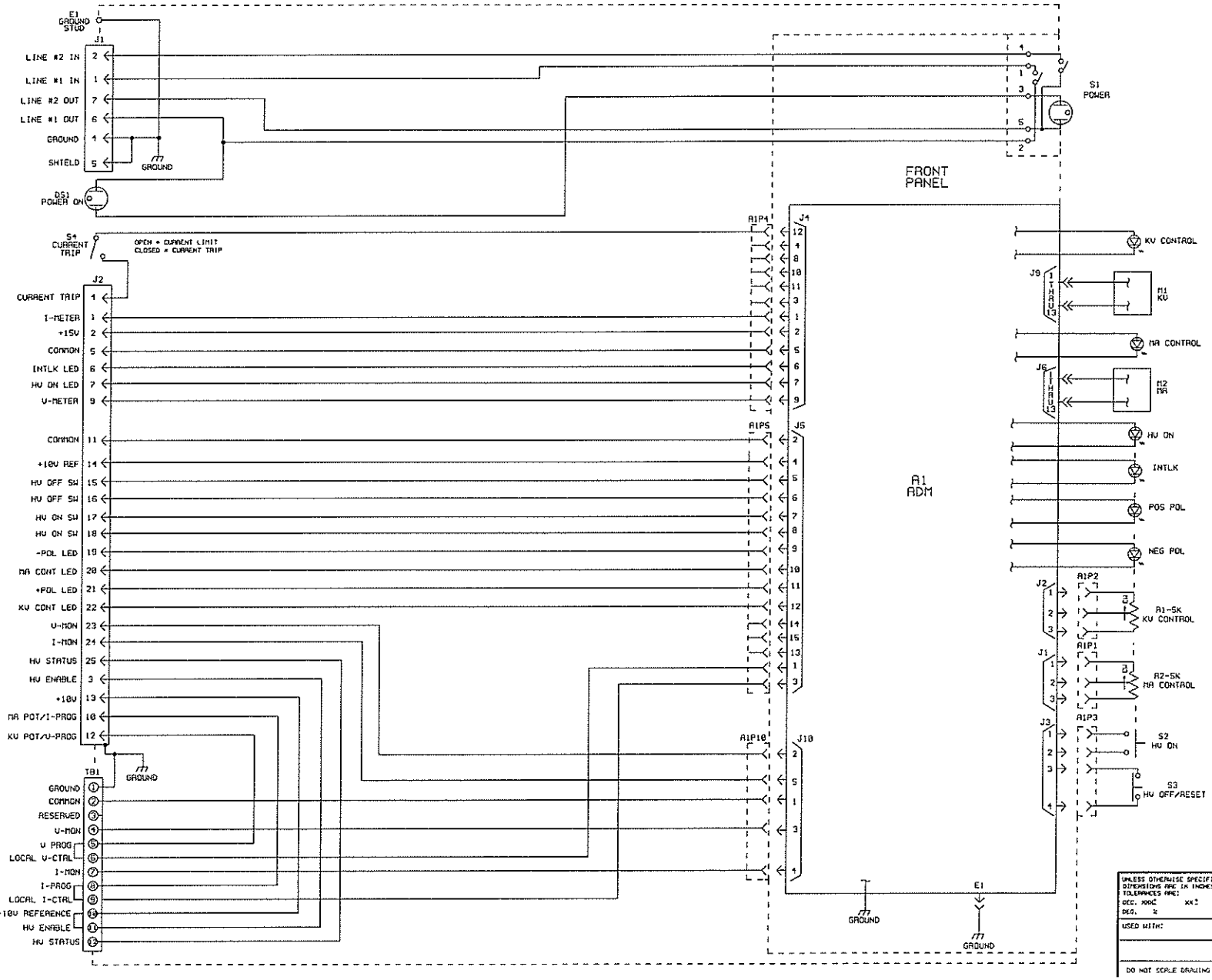

REV	BY	DESCRIPTION	DATE	APPROVED

UNLESS OTHERWISE SPECIFIED DIMENSIONS ARE IN INCHES TOLERANCES ARE:
DEC. XXX± XX±
DEG. ±
USED WITH:
DO NOT SCALE DRAWING

FILE NO.	EXTENSION
\2001\390830.SCH	

APPROVALS	DATE
DRAWN JAG	010607
CHECKED	010607
RELEASED	

GLASSMAN HIGH VOLTAGE, INC.
P.O. BOX 317, HIGH BRIDGE, N.J. 08829
(908) 638-3000 FAX (908) 638-3700

TITLE: SCHEMATIC DIAGRAM
RP-OS-1

D | DWG. NO. 200139-003 | REV. NA

SCALE NONE | SHEET 1 OF 1

REV	BY	DESCRIPTION	DATE	APPROVED
NR-1	TJP	ADDRESS UPDATE	122110	

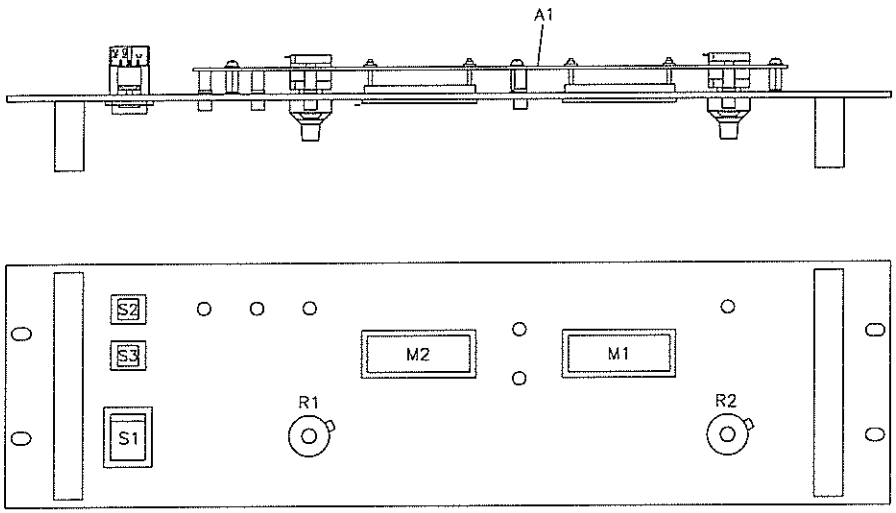

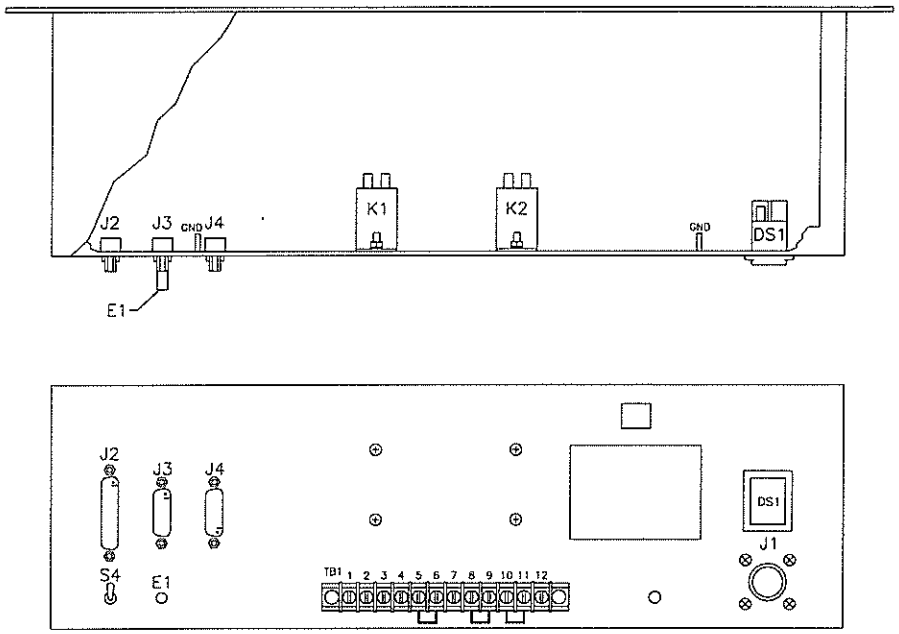

UNLESS OTHERWISE SPECIFIED DIMENSIONS ARE IN INCHES TOLERANCES ARE : DEC. XXX ± XX ± DEG. ±	FILE NO. EXTENSION \2013\55002-1.DWG	GLASSMAN HIGH VOLTAGE, INC. P.O. BOX 317, HIGH BRIDGE, NJ 08829 (908)-638-3800 FAX (908)-638-3700	
THIRD ANGLE PROJECTION	APPROVALS / DATE	TITLE PARTS PLACEMENT REMOTE PANEL RP-OS-01	
	DRAWN TA 073097		
	CHECKED JMC 080197	B DWG.NO. 201355-002	REV. NR-1
DO NOT SCALE DRAWING	RELEASED	SCALE NONE	SHEET 1 OF 1

REV	BY	DESCRIPTION	DATE	APPROVED
NR-1	TJP	ADDRESS UPDATE	122110	HWS

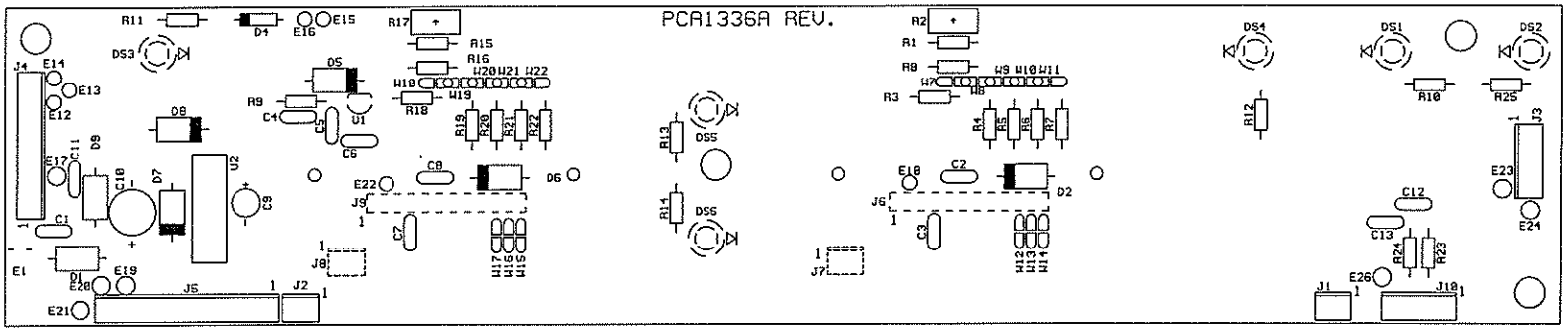

REDUCED ONLY

UNLESS OTHERWISE SPECIFIED DIMENSIONS ARE IN INCHES TOLERANCES ARE : DEC. XXX ± XX ± DEG. ±	FILE NO. EXTENSION \PCA1\336005#1.PCB	GLASSMAN HIGH VOLTAGE, INC P.O. BOX 317, HIGH BRIDGE, NJ 08829 (908)-638-3800 FAX (908)-638-3700
THIRD ANGLE PROJECTION	APPROVALS / DATE: DRAWN TA 071497; CHECKED JMC 080497; RELEASED	TITLE PARTS PLACEMENT ADM-OS-1
DO NOT SCALE DRAWING	SSF	B DWG.NO. PCA1336-005 REV. NR-1
		SCALE NONE SHEET 1 OF 1

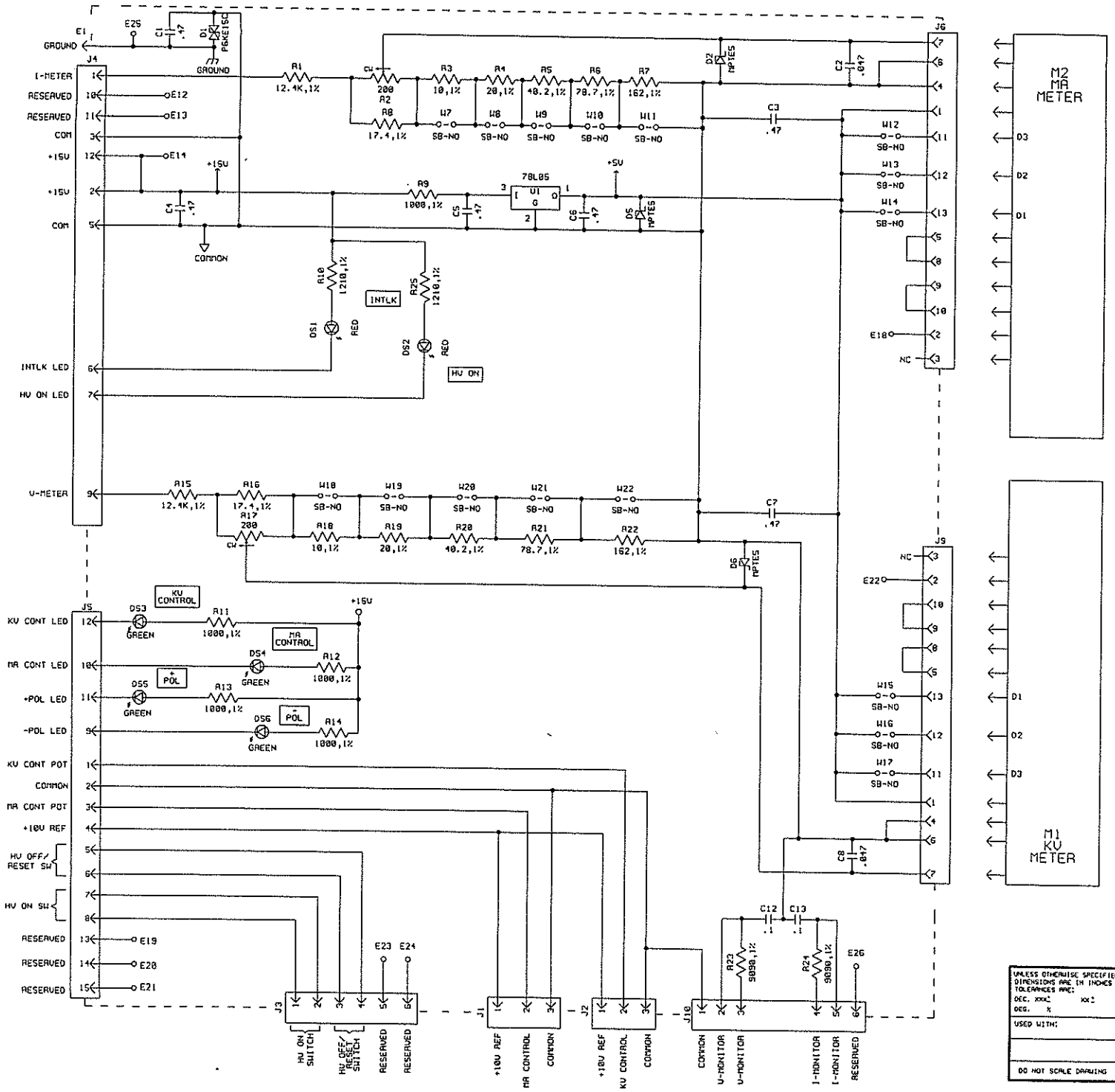

REV	BY	DESCRIPTION	DATE	APPROVED
A	MDS	ECN 5524: "RESERVED" PINS WERE "SPARE"	033098	EJM
A-1	TJP	ADDRESS UPDATE	041912	HMS
A-2	TJP	JS-13/14 LABEL UPDATES	052413	KJD

NOTES

1 UNLESS OTHERWISE SPECIFIED:
ALL CAPS ARE IN uF.

G.H.V., INC. RESERVES THE RIGHT TO SUBSTITUTE PARTS WITH THOSE OF SIMILAR OR BETTER PERFORMANCE.

UNLESS OTHERWISE SPECIFIED DIMENSIONS ARE IN INCHES TOLERANCES ARE: DEC. XXX± XX± DEG. ±	FILE NO. EXTENSION \1000\57003A2.SCH		GLASSMAN HIGH VOLTAGE, INC. P.O. BOX 317, HIGH BRIDGE, NJ 08829 (908)-638-3000 FAX (908)-638-3700
	APPROVALS	DATE	TITLE SCHEMATIC DIAGRAM ADM-OS
USED WITH:	DRAWN TA	072297	
	CHECKED JS	072497	D DWG. NO. 100057-003 REV. A-2
	RELEASED		
DO NOT SCALE DRAWING			SCALE NONE SHEET 1 OF 1

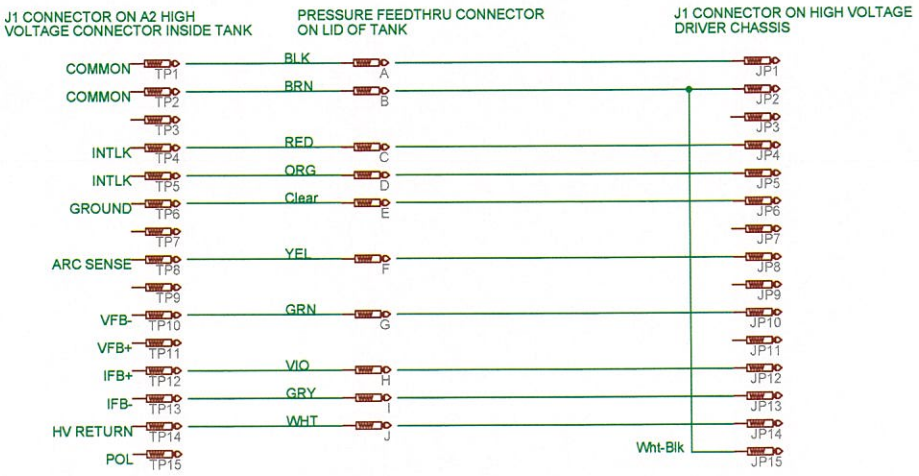
J1 CONNECTOR ON A2 HIGH VOLTAGE CONNECTOR INSIDE TANK
PRESSURE FEEDTHRU CONNECTOR ON LID OF TANK
J1 CONNECTOR ON HIGH VOLTAGE DRIVER CHASSIS
COMMON TP1
COMMON TP2
TP3
INTLK TP4
INTLK TP5
GROUND TP6
TP7
ARC SENSE TP8
TP9
VFB- TP10
VFB+ TP11
IFB+ TP12
IFB- TP13
HV RETURN TP14
POL TP15
BLK A
BRN B
RED C
ORG D
Clear E
YEL F
GRN G
VIO H
GRY I
WHT J
JP1
JP2
JP3
JP4
JP5
JP6
JP7
JP8
JP9
JP10
JP11
JP12
JP13
JP14
JP15
Wht-Blk

Remote control Start/Stop modification for PS/OS450N3.OJY1

TB1 connection on rear of Glassman "remote" chassis

Relays and circuits installed inside chassis in this modification

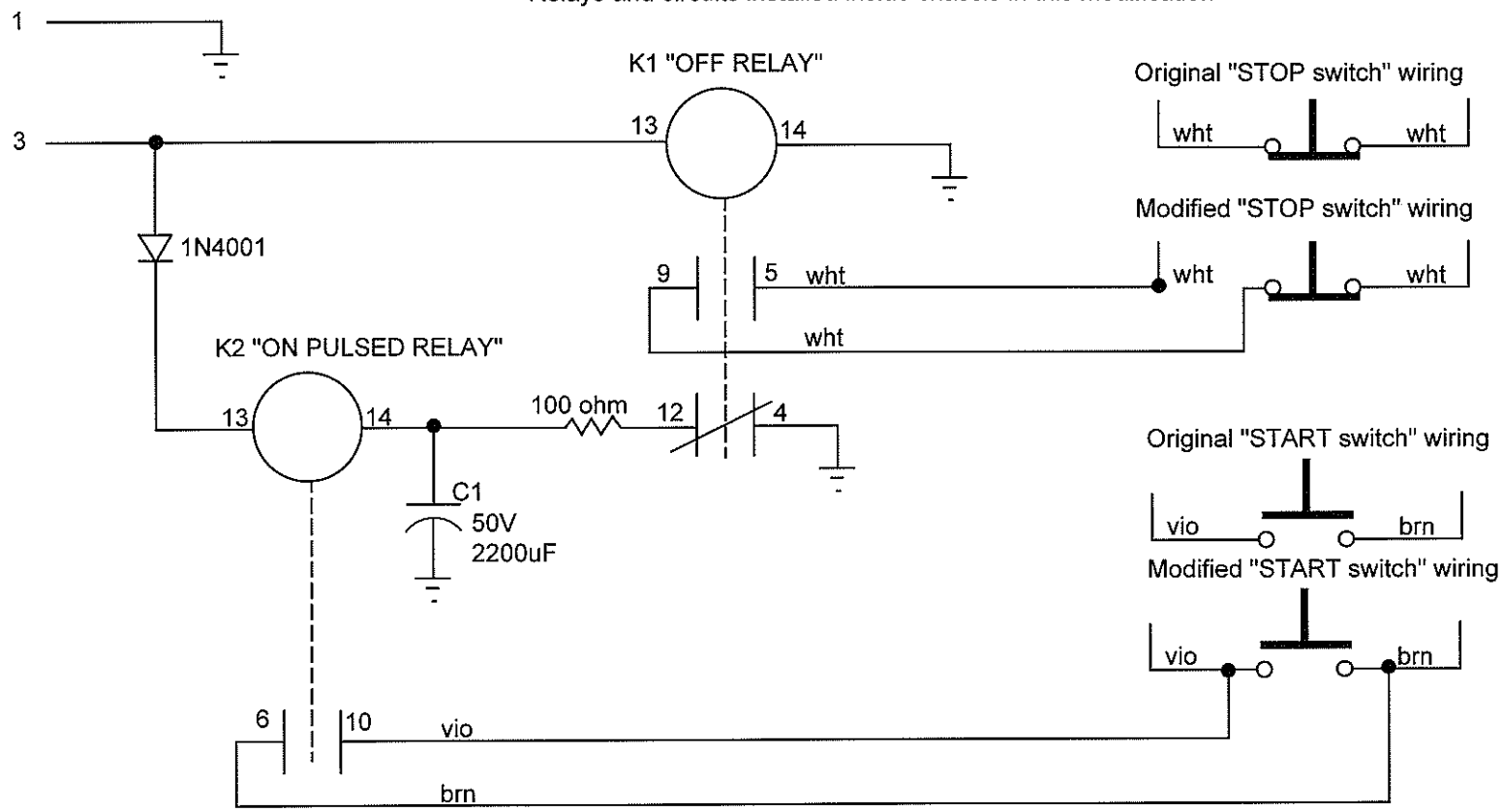

K1 and K2 are Potter&Brumfield KHAU-17D11-24

Power supply is held in the "OFF" state when K1 is not energized

Also while K1 is de-energized, C1 is discharged via 100 ohm

When 24V with respect to ground is applied to TB1-3:

- K1 energizes and releases the supply from its "OFF" condition
- K1 removes the 100 ohm path to ground for K2
- K2 pulses on for approx 2 seconds as C1 charges
- This sends a "start" command to the power supply

After starting, the local STOP button will still turn off the supply, and the local START can reissue another start.

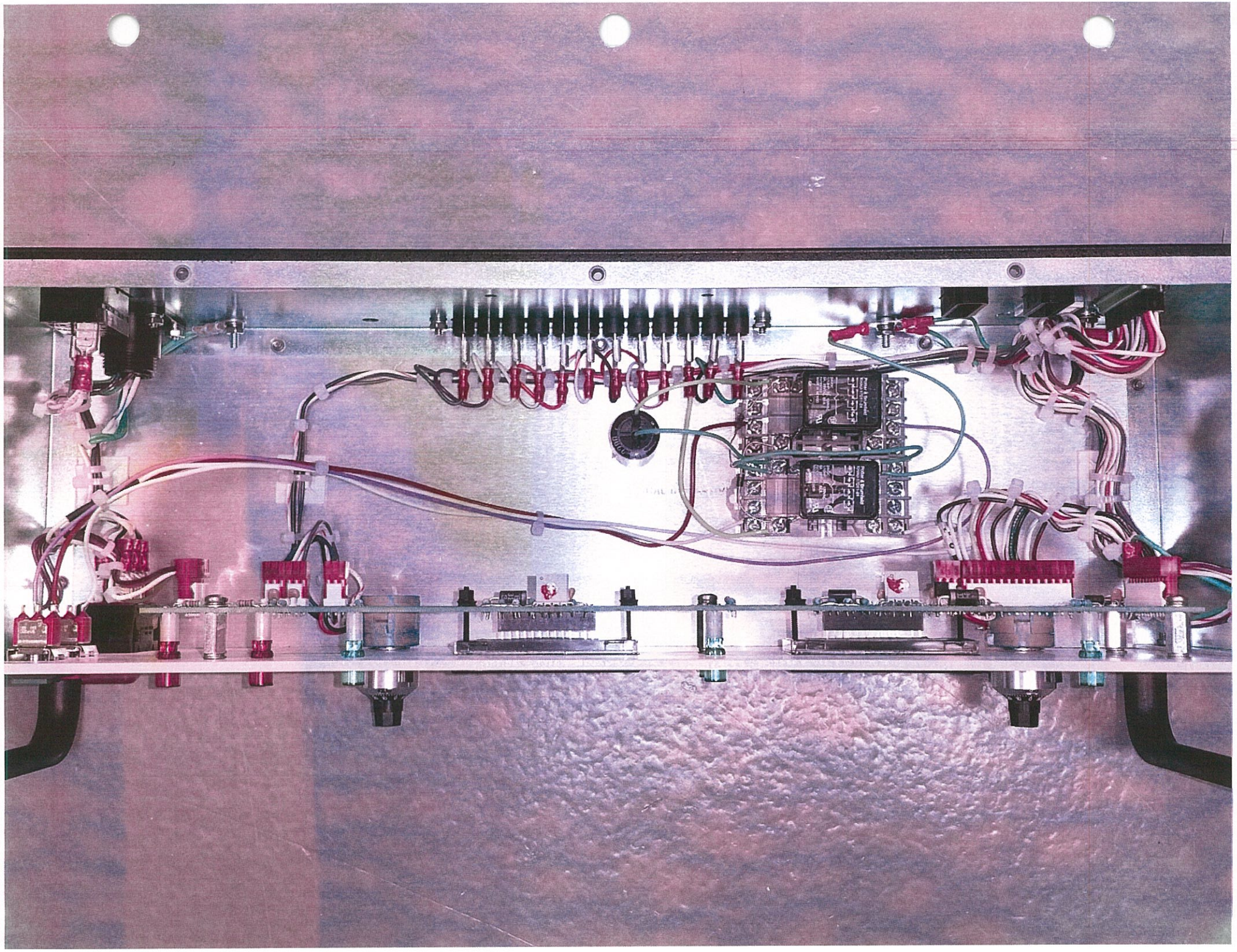

John,

Looks good to me, I don't see any issues with your arrangement. I agree that the supply will not restart even with the 24V command signal still applied if the power to the supply is cycled until either the HV ON pushbutton is pressed or the 24V command signal is toggled after the 1 second or so that is required for the capacitor bleed down. This is also safe for interlock operation since if you are using the external interlock and the interlock is opened, when the interlock is again closed either the pushbutton must be pressed or the 24V command signal toggled to reset the HV output.

Steve

Steve DeClario
Chief Engineer

Glassman High Voltage Inc.
Innovations in high voltage power supply technology.

Steve.DeClario@GlassmanHV.com
www.GlassmanHV.com
Phone:(908) 638-3800 Ext.287
Fax:(908) 638-3700

From: John Hansknecht [mailto:hansknec@jlab.org]
Sent: Thursday, November 03, 2016 1:43 PM
To: Steve DeClario <steve.declario@glassmanhv.com>
Cc: 'Scott (Scott)' <scott.jarmicki@glassmanhv.com>; Joe Grames <grames@jlab.org>; Matt Poelker <poelker@jlab.org>
Subject: Re: PS/OS450N3.OJY1 "remote control"

Steve,

Attached is my modification for remote start/stop (just in case you keep track of these things). Our supply is intended to always be controlled by computer, so I wanted the supply held off unless the computer gives the start command by sending 24VDC to TB1 pin 3.

It works fine and I have documented it clearly in house. For failure analysis, if the Glassman supply power is cycled, but our control system held the "HV ON" command, the supply will not restart until we cycle our command off and on again. Seems safe to me, but so far I am the only one here who has analyzed the circuit.

John