Electron Beam Properties of BNL SRF Gun

Electron beam properties to measure beam polarization with a Compton Transmission Polarimeter

Riad Suleiman

Friday, February 19, 2021

Jefferson Lab

Compton Transmission Polarimeter

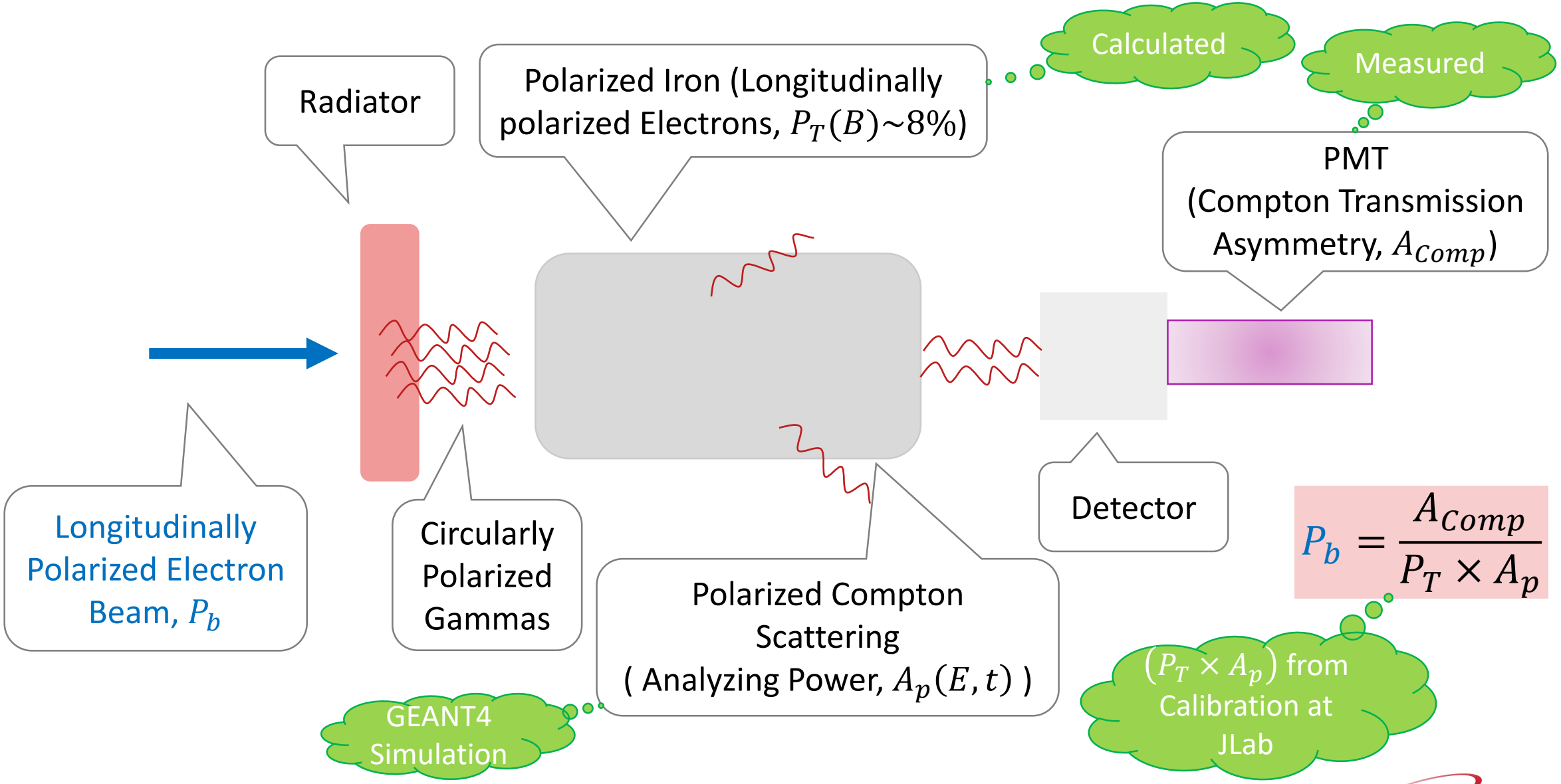

$$P_b = \frac{A_{Comp}}{P_T \times A_p}$$

Test Setup at Jefferson Lab

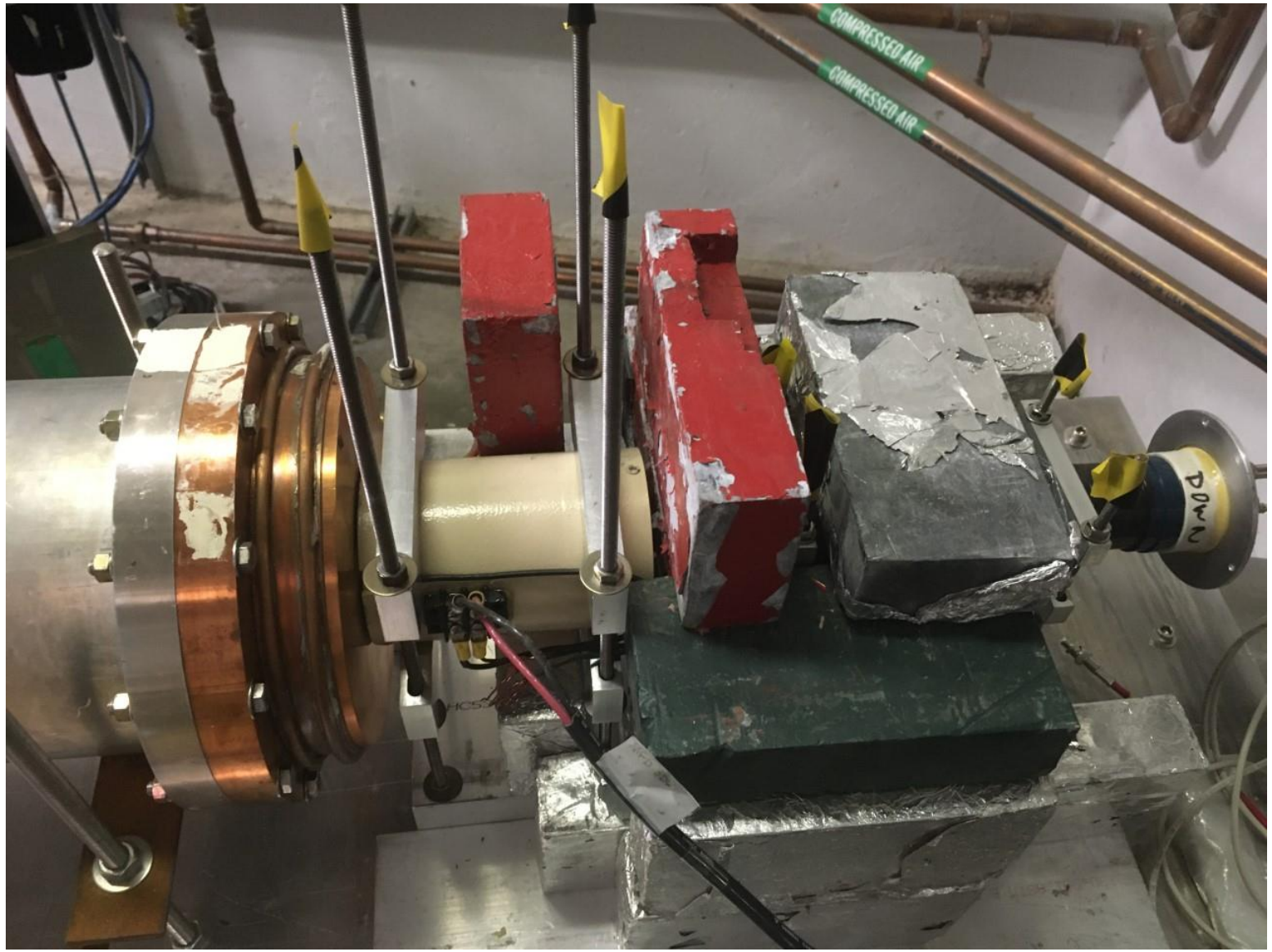

Beam Energy

- CEBAF Injector can deliver electron beam with 5 – 9 MeV kinetic energy
- CEBAF Mott polarimeter ideally works at 5 MeV kinetic energy

- **BNL beam kinetic energy should be 5.0 MeV (total energy 5.5 MeV)**
  - Minimum *radiation levels and no risk of activation*

Polarimeter Schematics at BNL

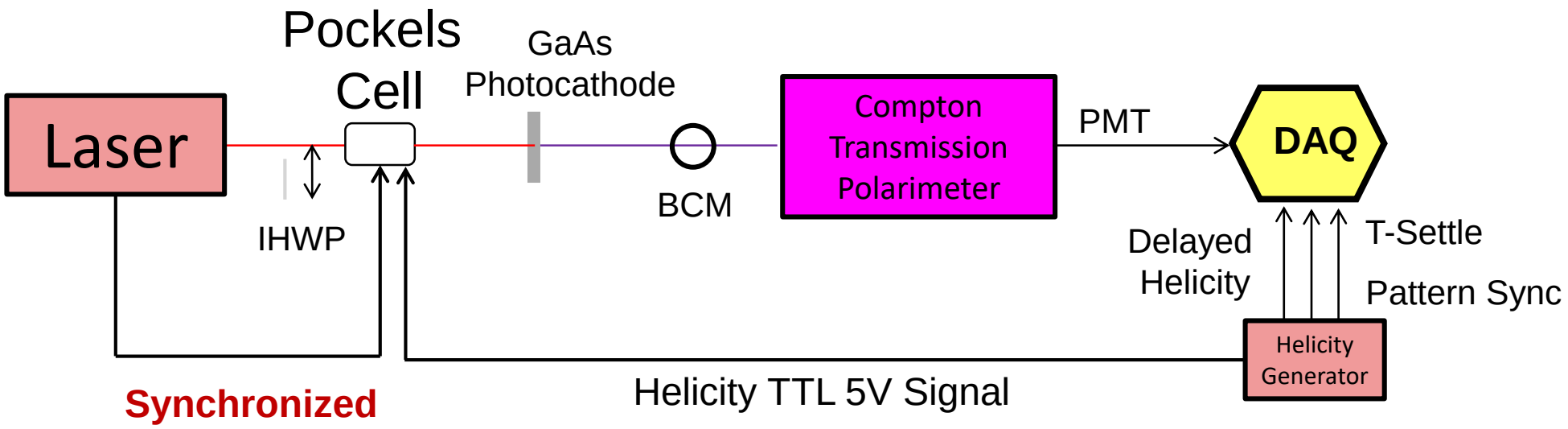

- Pockels Cell is synchronized to laser
- Helicity board will just provide a gate to determine which voltage (helicity) Pockels Cell gets set to

Laser (Electron) Beam Timing at BNL

- Microbunch structure: 78 kHz, or 12.8 µs, each bunch < 1 ns
- Macropulse repetition rate: 1 Hz, 5 Hz or 10 Hz for microbunch trains. Number of microbunches in train can be 1,10, …, 5000 …, with bunch repetition rate of 78 kHz
- Drive laser is capable of providing any random pattern of pulses when running at 78 kHz. CW, without any macropulse structure, is no issue.

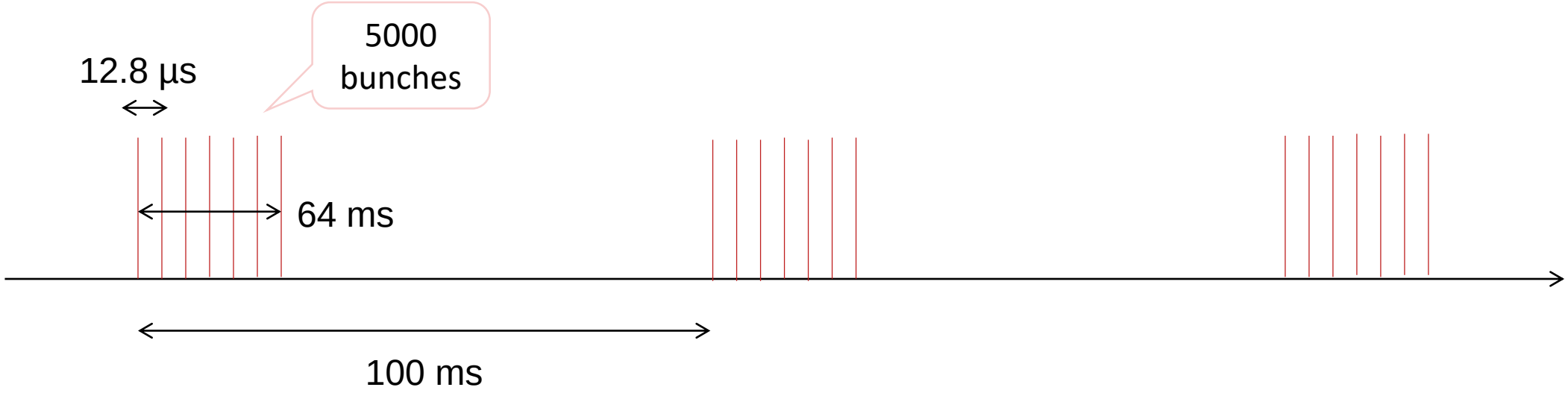

Laser/Electron Beam, Pockels Cell, and Helicity Board Timing

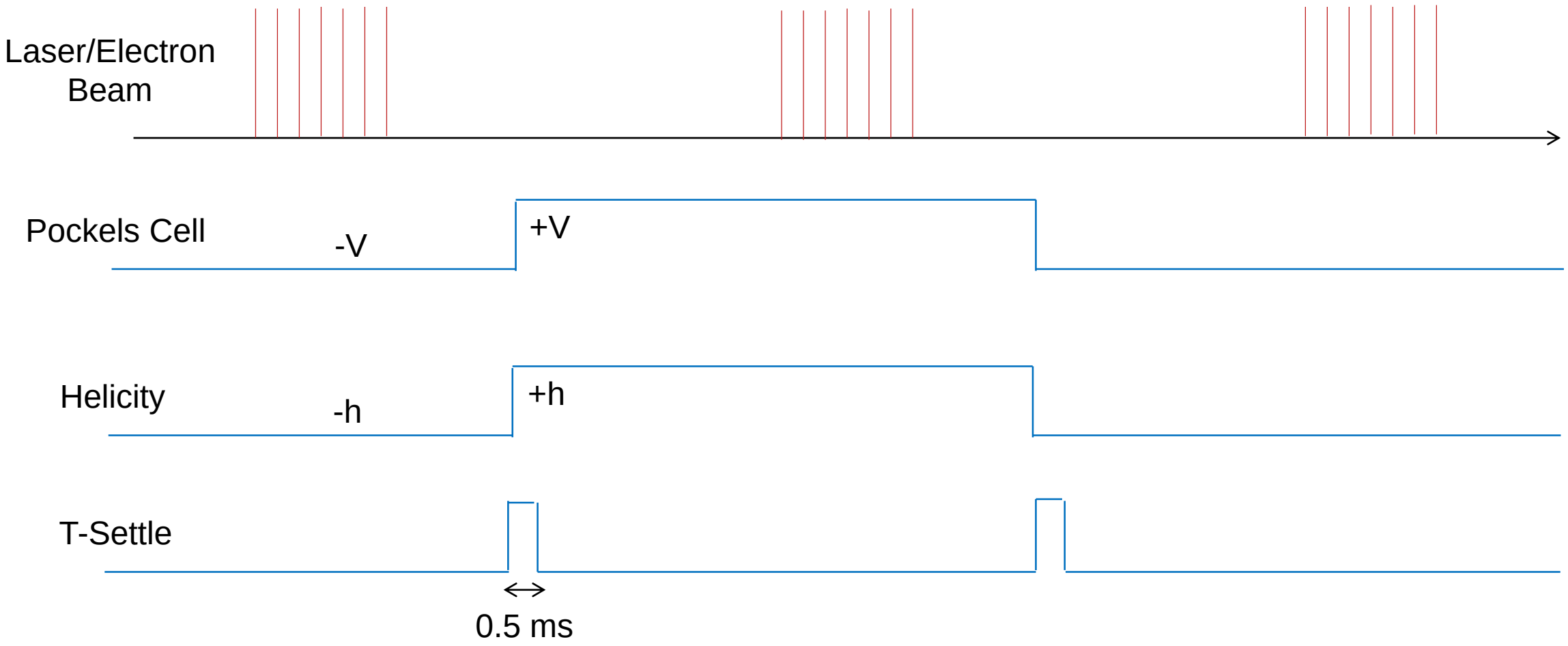

New Portable DAQ

- DAQ Readout:
  - Delayed Helicity, T_Settle and Pattern Sync
  - PMT, BCM
  - Battery

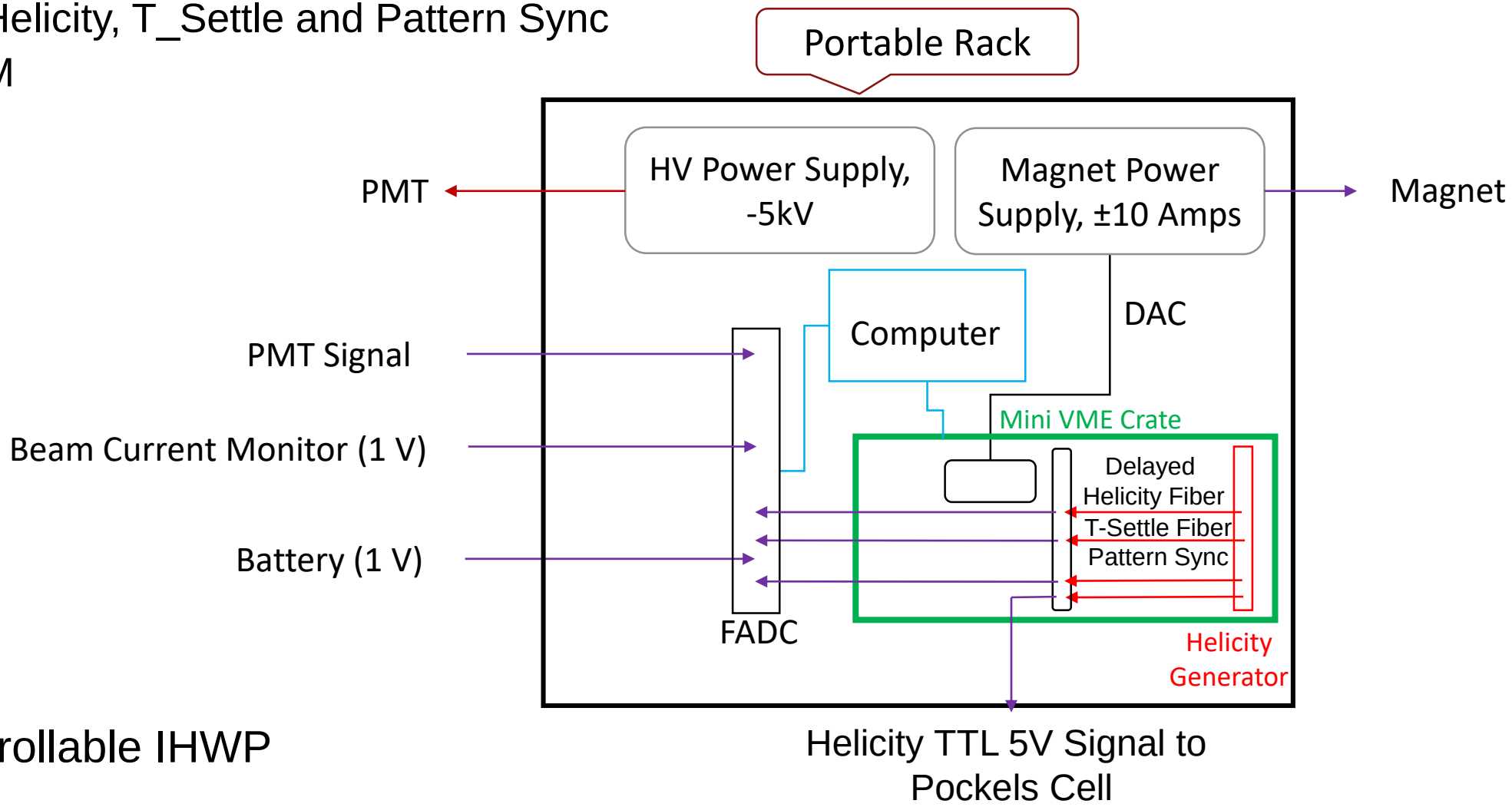

- Remote controllable IHWP

DAQ Readout

- Each electron beam bunch < 1 ns
- Each bunch will generate a detector signal of about 1 μs
- Bunch separation is 12.8 μs
- Helicity Board will run at 10 Hz:
  - T-Settle = 0.5 ms
  - T-Stable = 99.5 ms

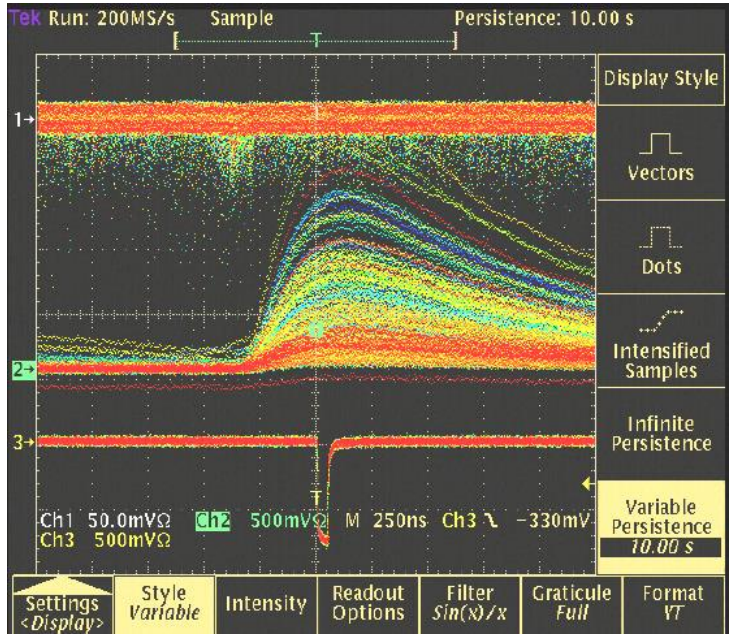

- DAQ Modes (self-triggered):
  - Sample Mode: 250 samples (two channels) and 25 samples (four channels) at rate up to 78 kHz – integrate offline
  - Semi-Int Mode: integrate over 1 μs at rate up to 78 kHz
- No deadtime/pileup since events (bunches) are not random

Bunch Charge and Average Beam Current

- Assume an average beam current of 1 μA
  - Bunch Charge = 10^{-6} / 7.8×10^{4} = 13 pC

- Maximum average current is limited to 2.5 μA by Low Power Dump

- At Jefferson Lab, for polarimeter calibration: 13 pC can be spread over 0.5 μs, for example

- Field emission of a few nA at 113 MHz may reach polarimeter – not a real problem

- To plan for unknown bunch charge, PMT high voltage will be used to keep detected signal at required level – prevent saturation of PMT/ADC or too small signal relative to pedestal

- Need a voltage signal (1 V, coupled to 50 Ω, with large bandwidth) proportional to beam current to measure charge asymmetry. BNL uses ICT, https://gmw.com/product/ict/