Description of Hardware of UITF 200 keV Mott DAQ

Riad Suleiman

Tuesday, January 18, 2022

Jefferson Lab

U.S. DEPARTMENT OF ENERGY | Office of Science

JSA

Upgraded Injector Test Facility – Mott data acquisition

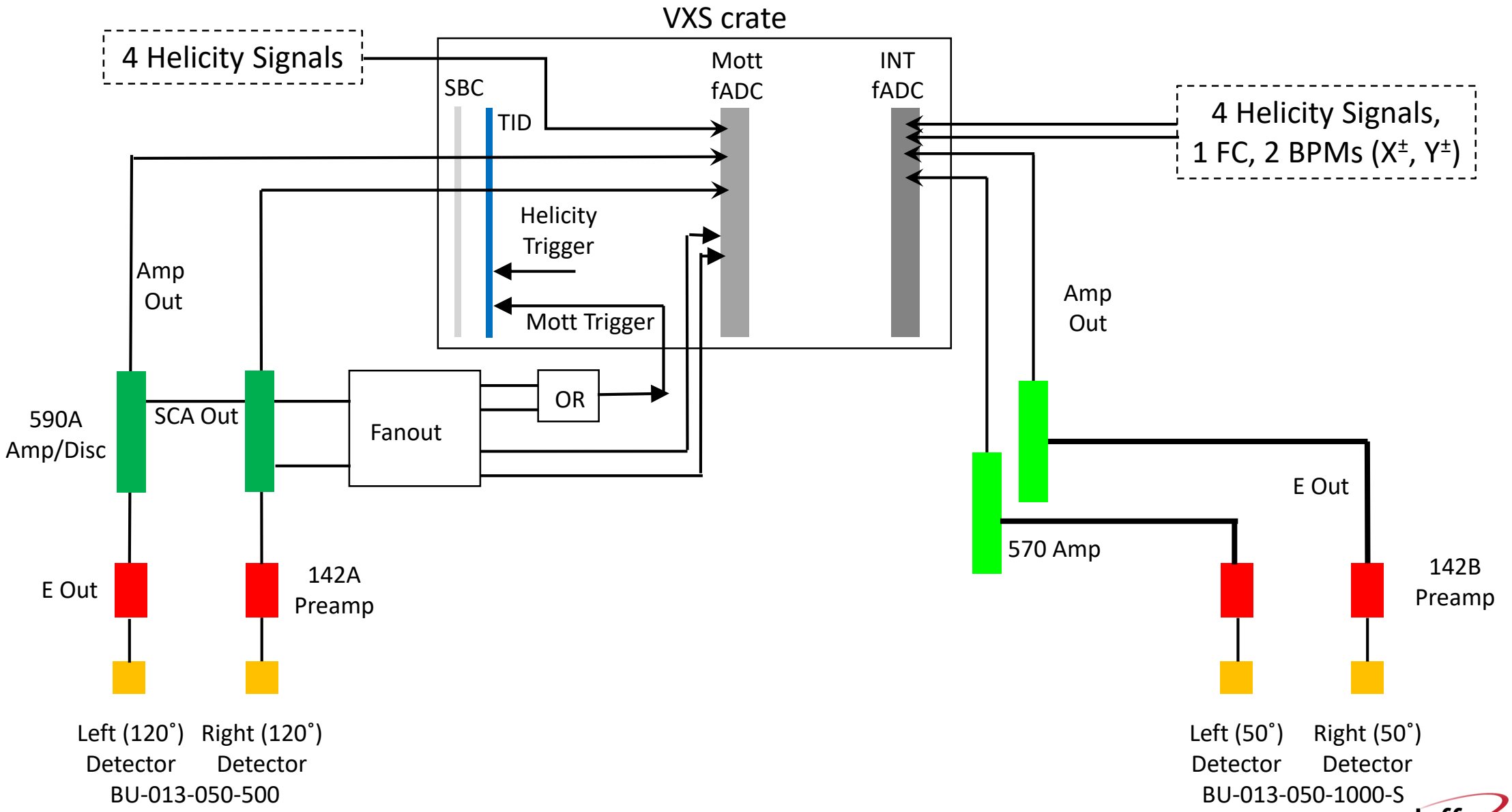

DAQ Hardware

- Cable NIM Crate and VXS Crate
- Cables from detectors to NIM Crate
- Helicity signals from Helicity Board to VXS Crate

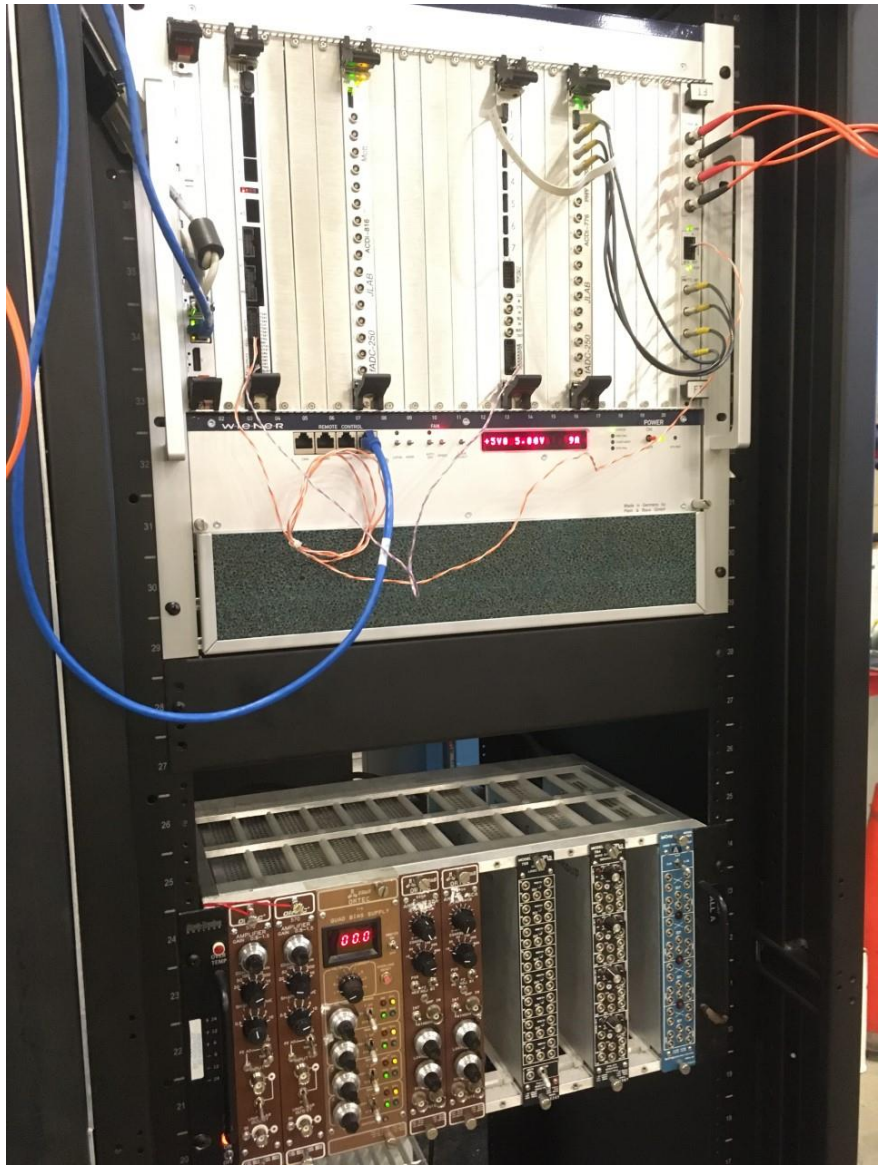

Mott DAQ

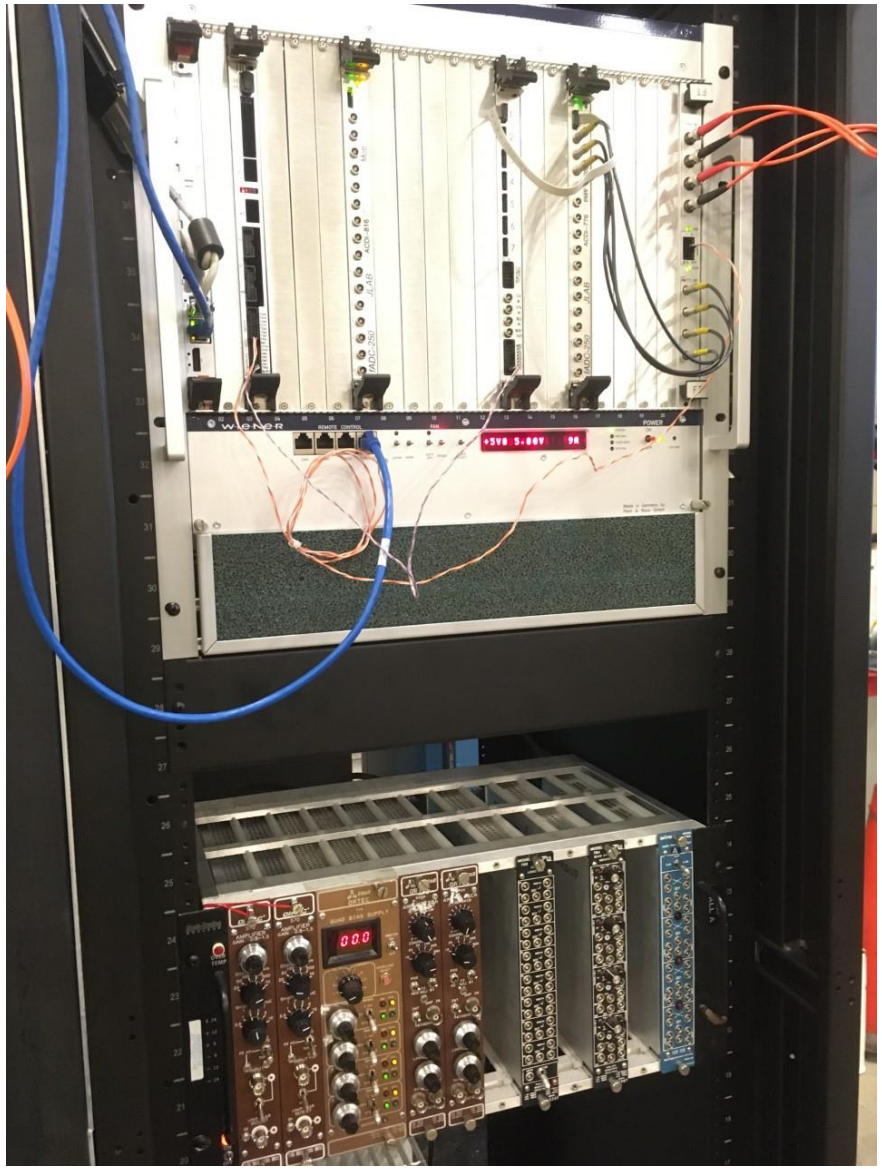

Hardware	Rack
itfmdaq0	ITF 07
Mott VXS Crate	
Mott NIM Crate	

Mott DAQ crates

VXS Crate

Slot	Board
1	Linux SBC
2	Empty
3	TID
4	Empty
5	Empty
6	Empty
7	Mott FADC
8	Empty
9	Empty
10	Empty
11	Empty
12	Empty
13	Distribution Board
14	Empty
15	Empty
16	INT FADC
17	Empty
18	Empty
19	Empty
20	Empty
21	FT

Mott NIM Crate

Slot	Board
1	570 Amplifier
2	570 Amplifier
3-4	ORTEC QUAD BIAS SUPPLY
5	590A Amplifier
6	590A Amplifier
7	Empty
8	Empty
9	Empty
10	QUAD GATE/DELAY GENERATOR PS794
11	LEVEL TRANSLATOR
12	LOGIC FAN IN/OUT LeCroy 429A

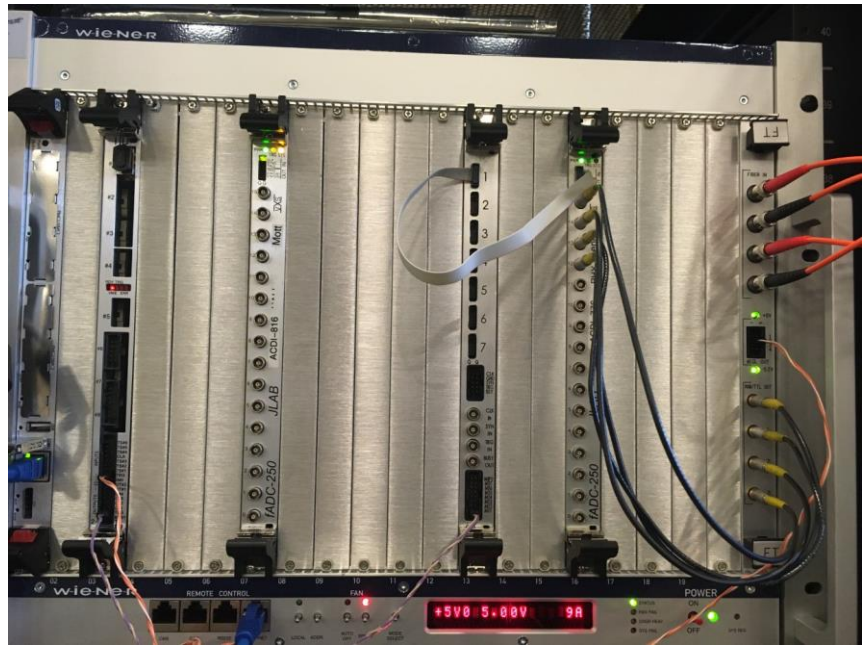

VXS CRATE

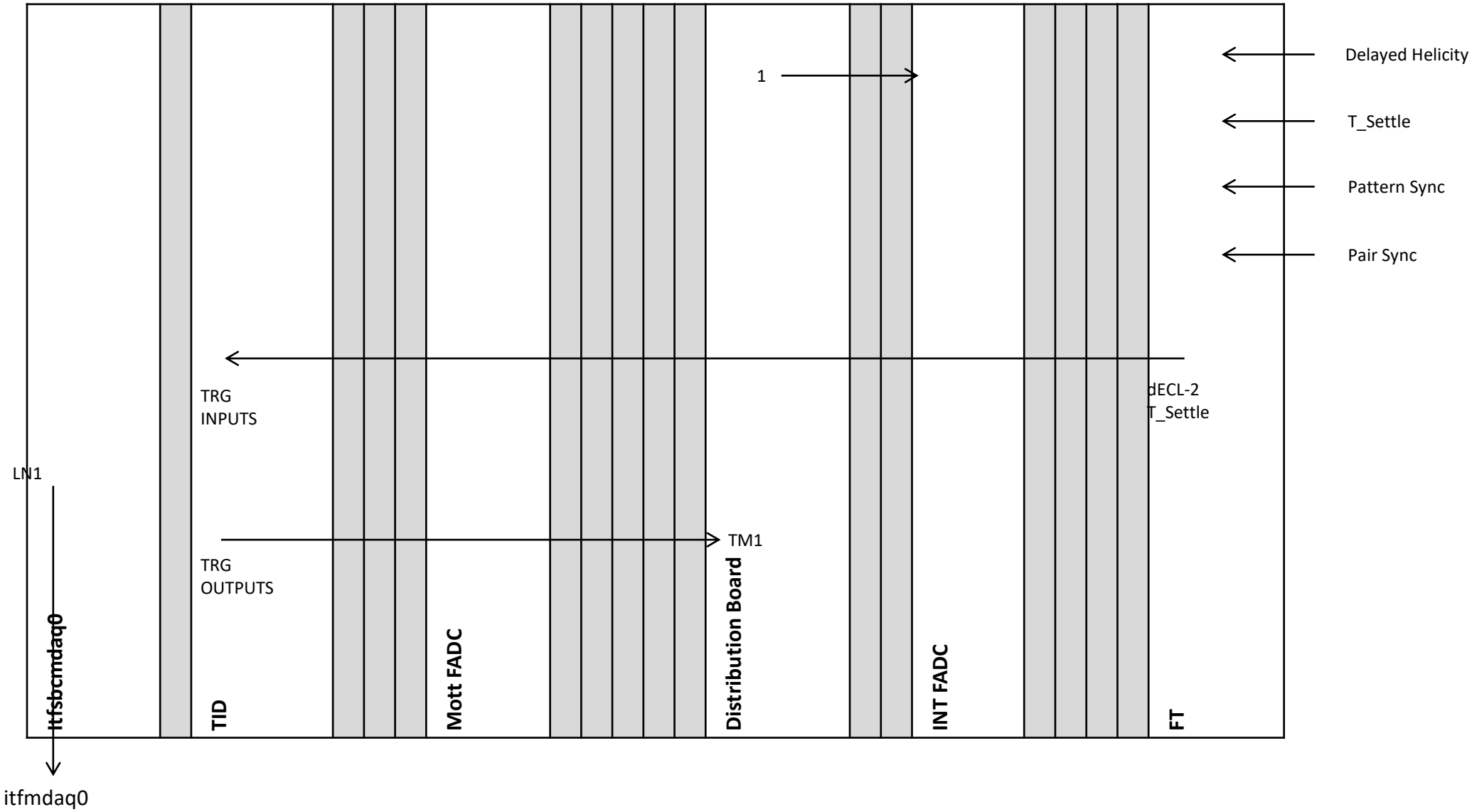
Delayed Helicity
T_Settle
Pattern Sync
Pair Sync
1
TRG
INPUTS
dECL-2
T_Settle
LN1
TM1
TRG
OUTPUTS
itfsbcmdaq0
TID
Mott FADC
Distribution Board
INT FADC
FT
itfmdaq0

Mott NIM Crate

570 Amp (50°) LEFT	570 Amp (50°) RIGHT	ORTEC QUAD BIAS SUPPLY	590A Amp (120°) LEFT	590A Amp (120°) RIGHT					QD 794	FAN 429A
→ IN E ← OUT E	→ IN E ← OUT E	142A Preamp (120°) LEFT **+115 V**	→ IN E ← OUT E	→ IN E ← OUT E					→ nT_Settle ← 428 ns nT_Settle Trigger	→ Delayed Helicity
		142A Preamp (120°) RIGHT **+115 V**								→ T_Settle
		142B Preamp (50°) LEFT **+115 V**								→ Pattern Sync
		142B Preamp (50°) RIGHT **+115 V**								→ Pair Sync

CHANNEL ASSIGNMENT – TRIGGER INTERFACE (TID)

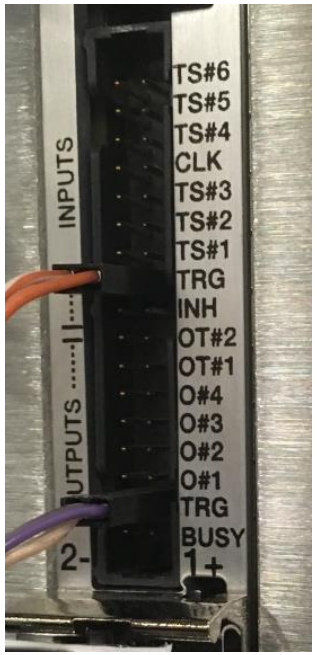

TID Chan	INPUTS
7	
6	
5	
4	
3	TS#3 (DB MT1)
2	
1	TS#1 (Mott DetTr)
0	TRG (Delayed nT_Settle)
INH	

TID Chan	OUTPUTS
7	
6	
5	
4	
3	
2	Distribution Board MT1
1	
0	

CHANNEL ASSIGNMENT – PREAMPLIFIERS

OUTPUTS	142A Preamp (120°) LEFT
E	570 Amp E IN
T OUT	TID

OUTPUTS	142A Preamp (120°) RIGHT
E	570 Amp E IN
T OUT	TID

OUTPUTS	142B Preamp (50°) LEFT
E	590A Amp E IN
T OUT	-

OUTPUTS	142B Preamp (50°) RIGHT
E	590A Amp E IN
T OUT	-

CHANNEL ASSIGNMENT – AMPLIFIERS

Channel	570 Amp (120°) LEFT
E IN	142A Preamp E
E OUT	Mott FADC CH0

Channel	590A Amp (50°) LEFT
E IN	142B Preamp E
E OUT	INT FADC CH0
SCA OUT	

Channel	570 Amp (120°) RIGHT
E IN	142A Preamp E
E OUT	Mott FADC CH1

Channel	590A Amp (50°) RIGHT
E IN	142B Preamp E
E OUT	INTFADC CH1
SCA OUT	

FADC

Mott

FADC Chan	Signal
1	
2	
3	
4	
5	
6	
7	
8	
9	
10	
11	Mott DetTr
12	
13	Delayed Helicity
14	T_Settle
15	Pattern–Sync
16	Pair–Sync

INT

FADC Chan	Signal
1	
2	
3	
4	
5	
6	
7	
8	
9	
10	Battery
11	
12	
13	Delayed Helicity
14	T_Settle
15	Pattern–Sync
16	Pair–Sync