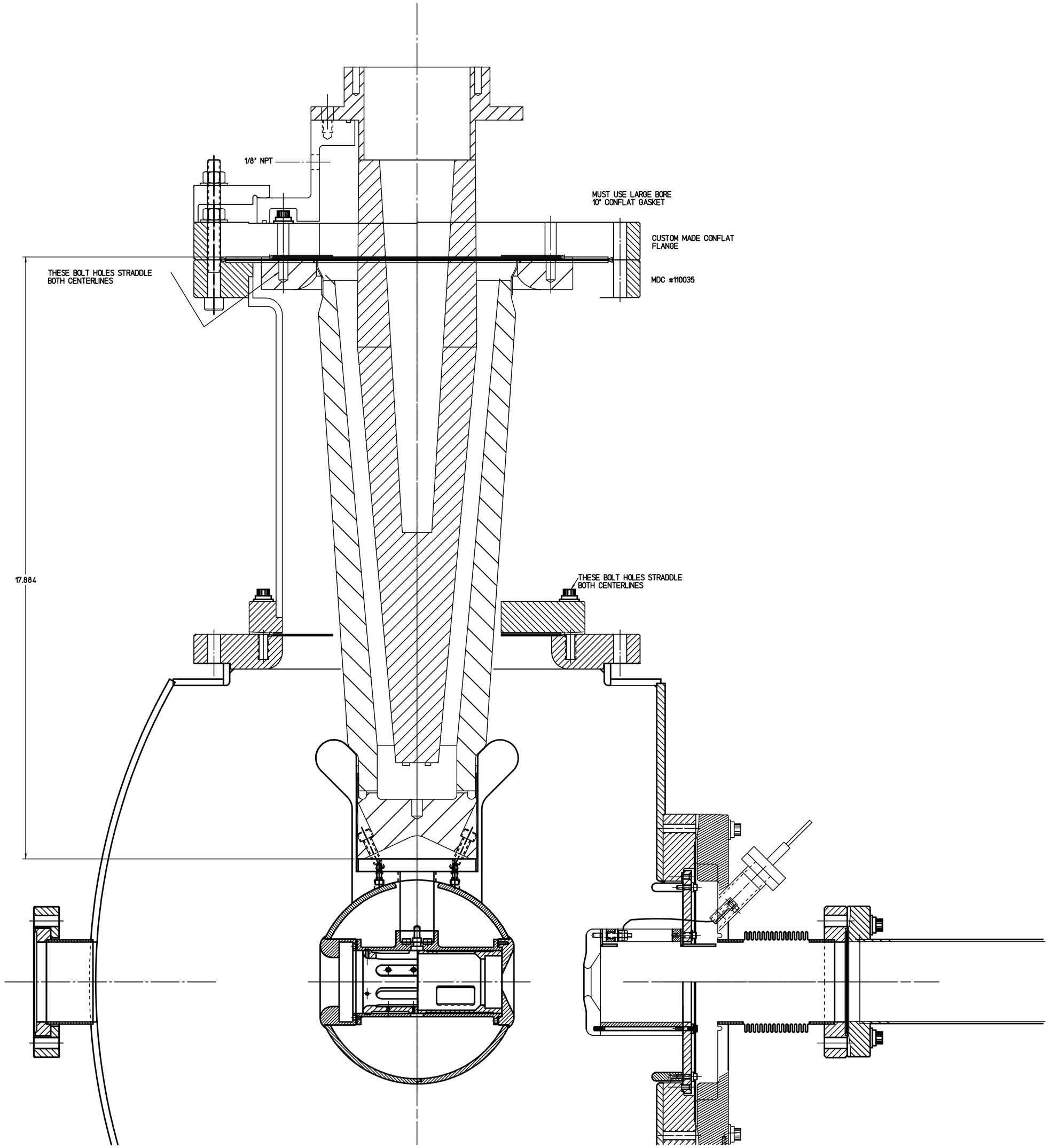
1/8" NPT
MUST USE LARGE BORE
10" CONFLAT GASKET
CUSTOM MADE CONFLAT
FLANGE
MDC #110035
THESE BOLT HOLES STRADDLE
BOTH CENTERLINES
17.884
THESE BOLT HOLES STRADDLE
BOTH CENTERLINES