Ion collector VICGT04

Gabriel Palacios
gpala001@odu.edu

05/01/2017

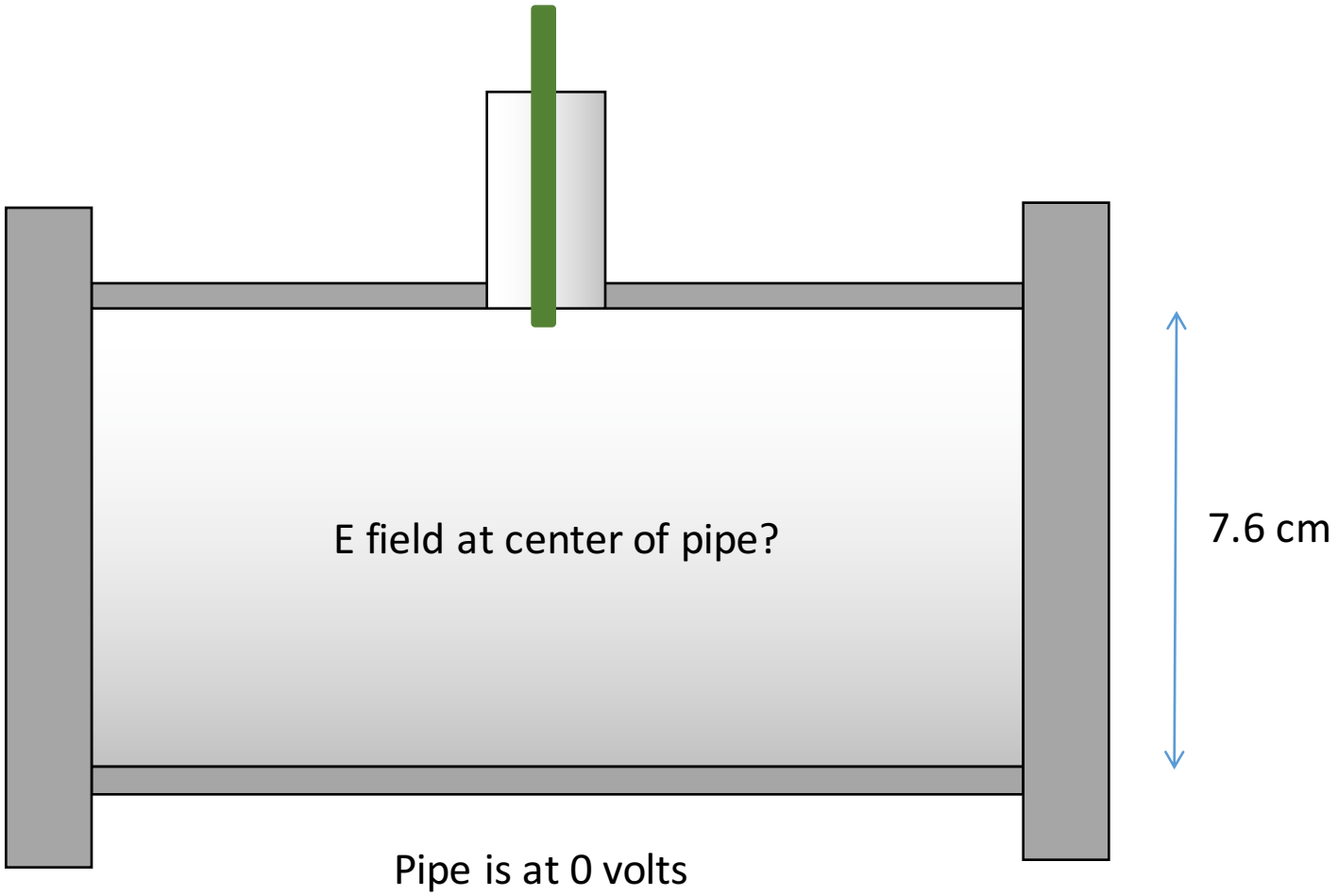

Outline

- Plots of the |E|, Ex, Ey fields vs the voltage applied on the copper wire (from 0 to 10V in steps of 1V, from 10 to 100V in steps of 5V and from 100 to 500V in steps of 10V) for two cases in Cartesian coordinates with the origin at the bottom left of the beamline:
  - At x=7.5, y=3.8 (corresponding at the center of the beamline).
  - At x=7.5, y=7.4 (just below the center of the wire).

Model in Draftsight .

*All in cm.

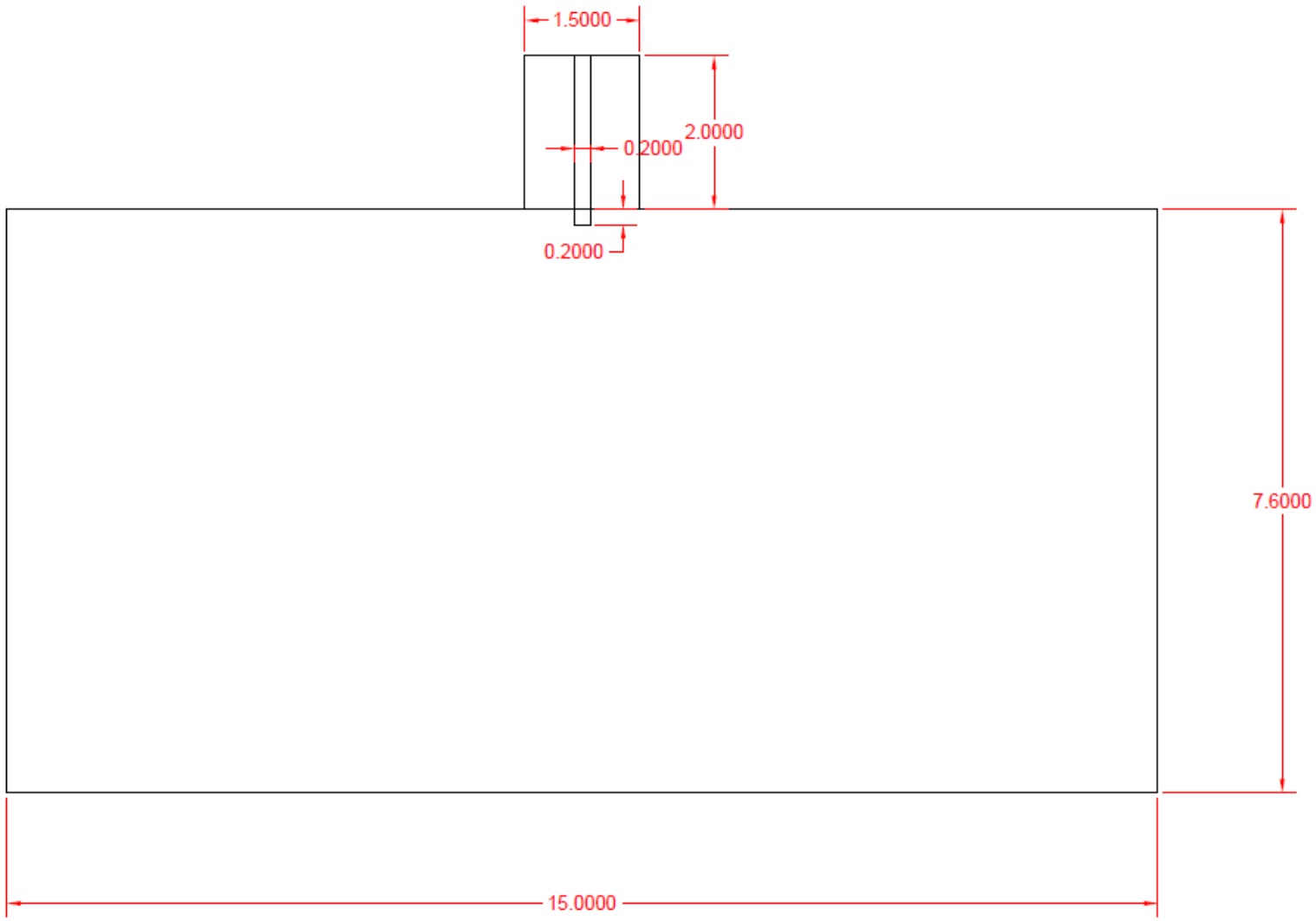

Model in Poisson (left), zoom of the tip of the copper wire (right).

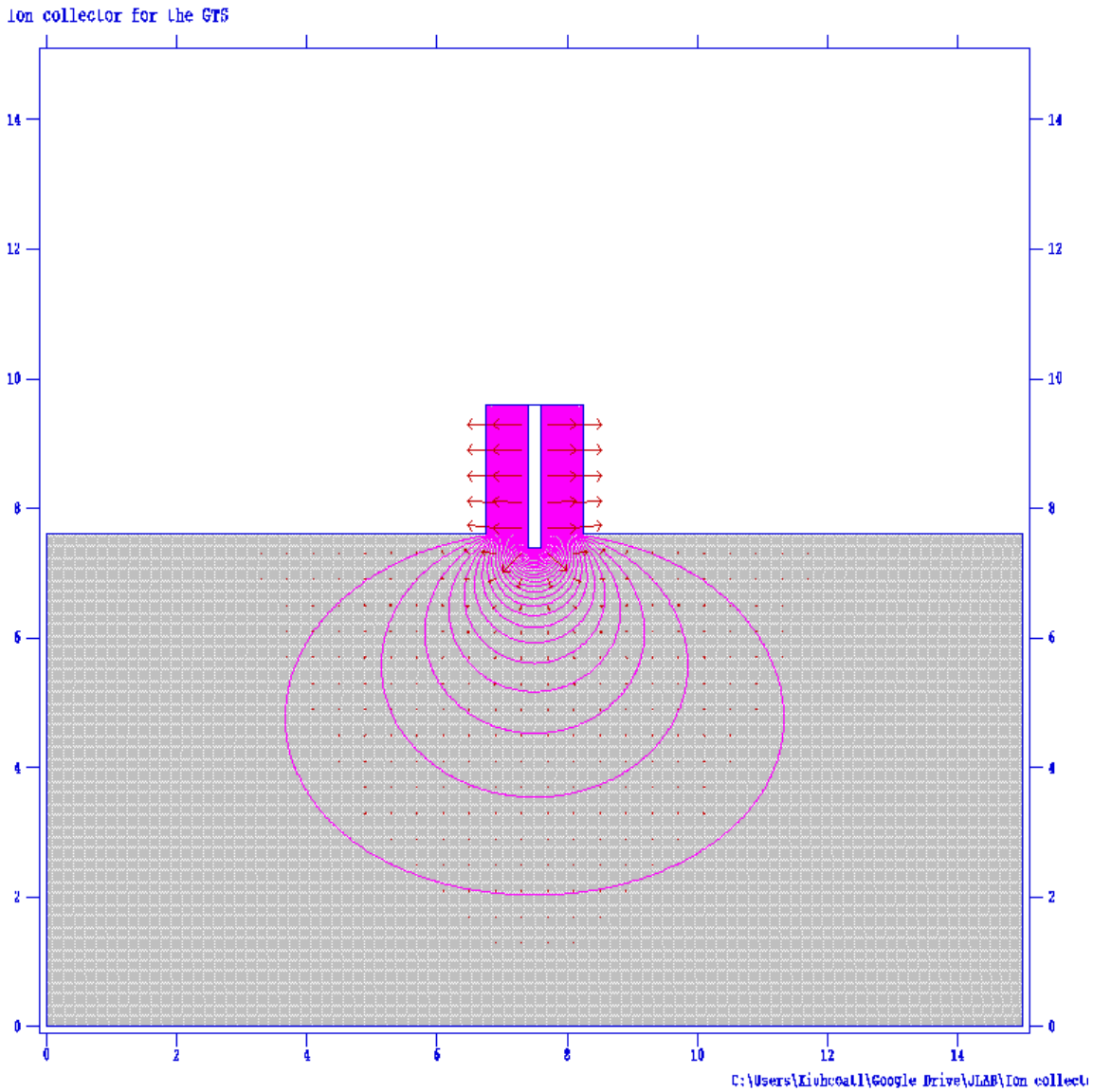

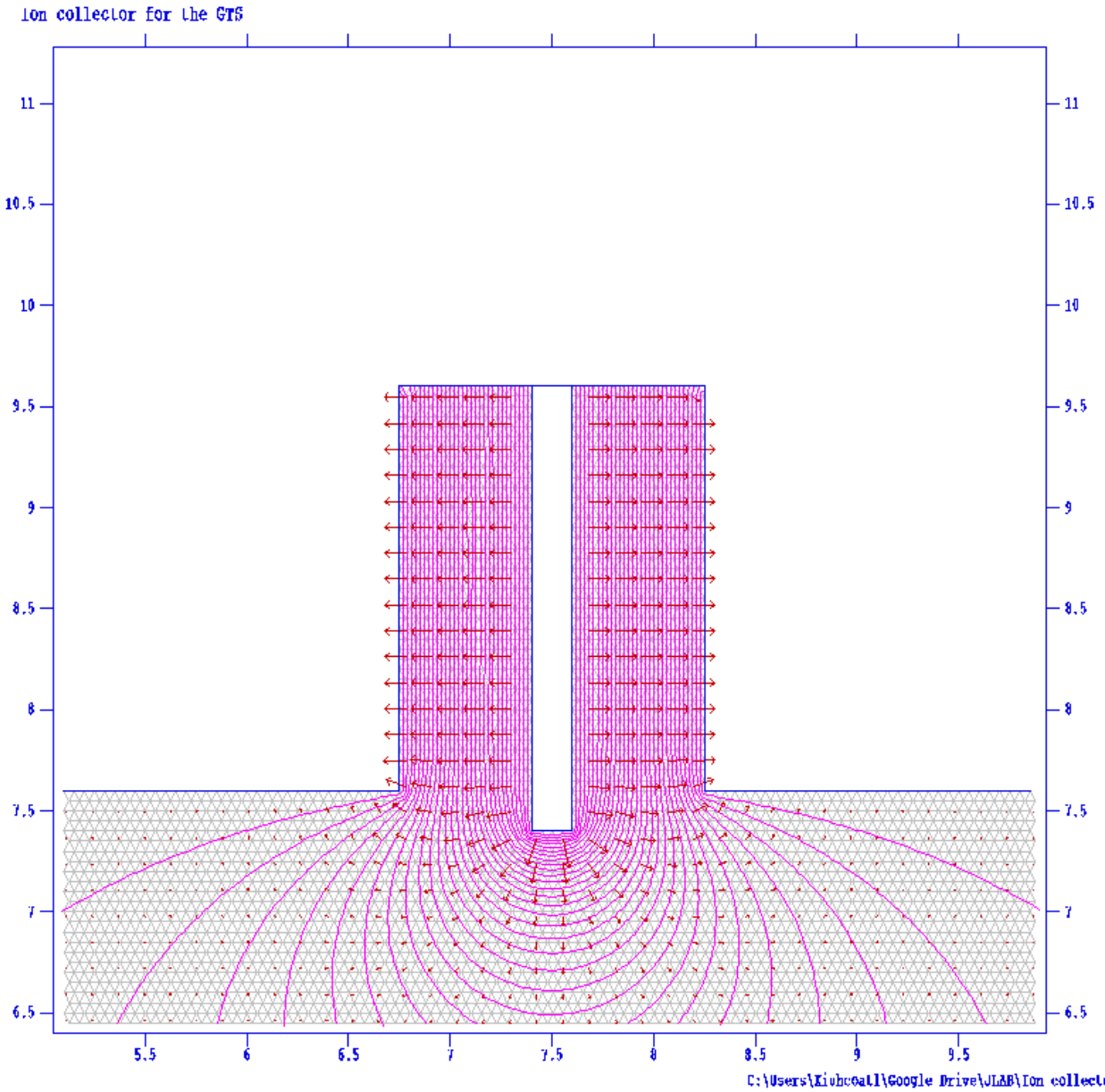

Center of beamline: |E| field.

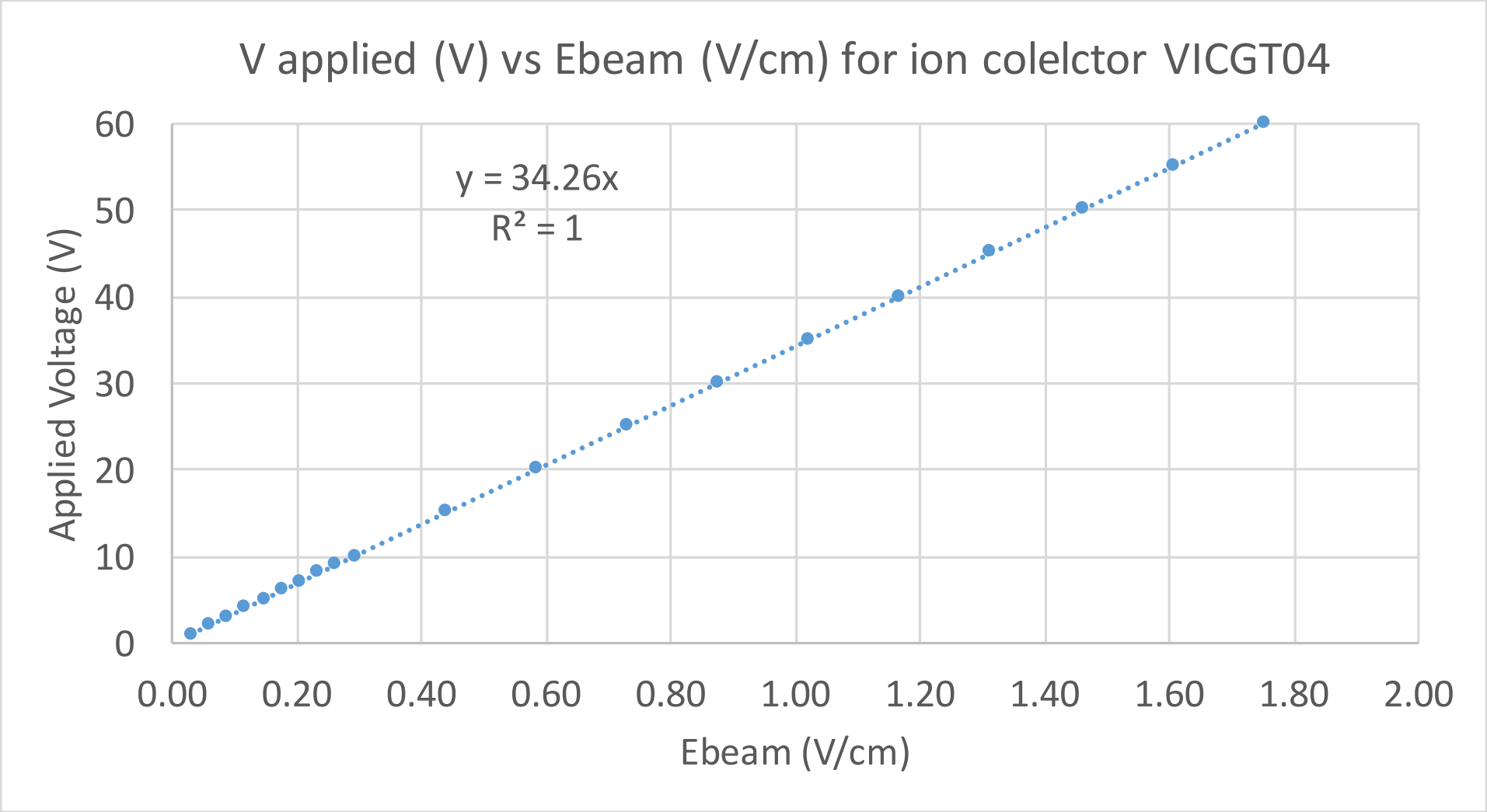

$$E_{beam}(r) = \frac{I}{2\pi\varepsilon_0 c} \cdot \frac{1}{r}$$

$$r = \sigma_{beam}$$

r=1 mm
I= 1 mA
E=0.6 V/cm
Then we need ~ 20 Volts

Cable tip: |E| field.

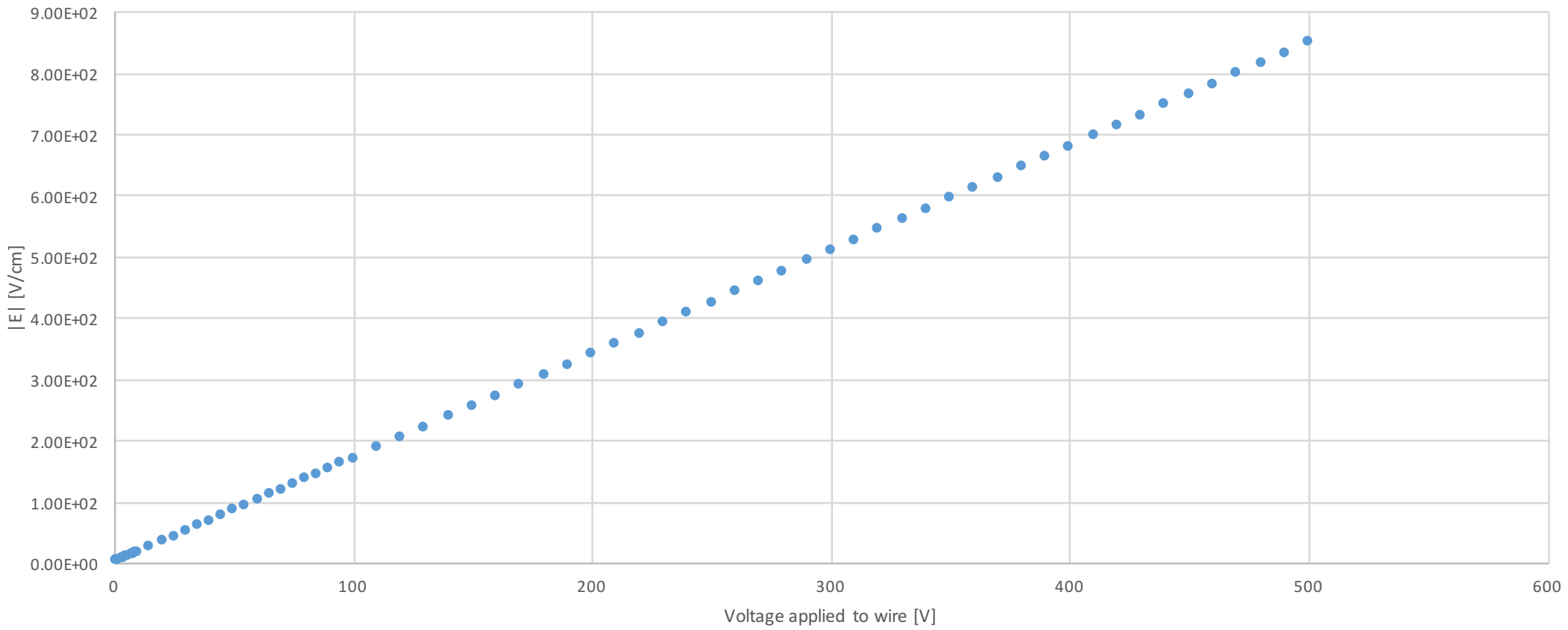

Cable tip: Ex field.

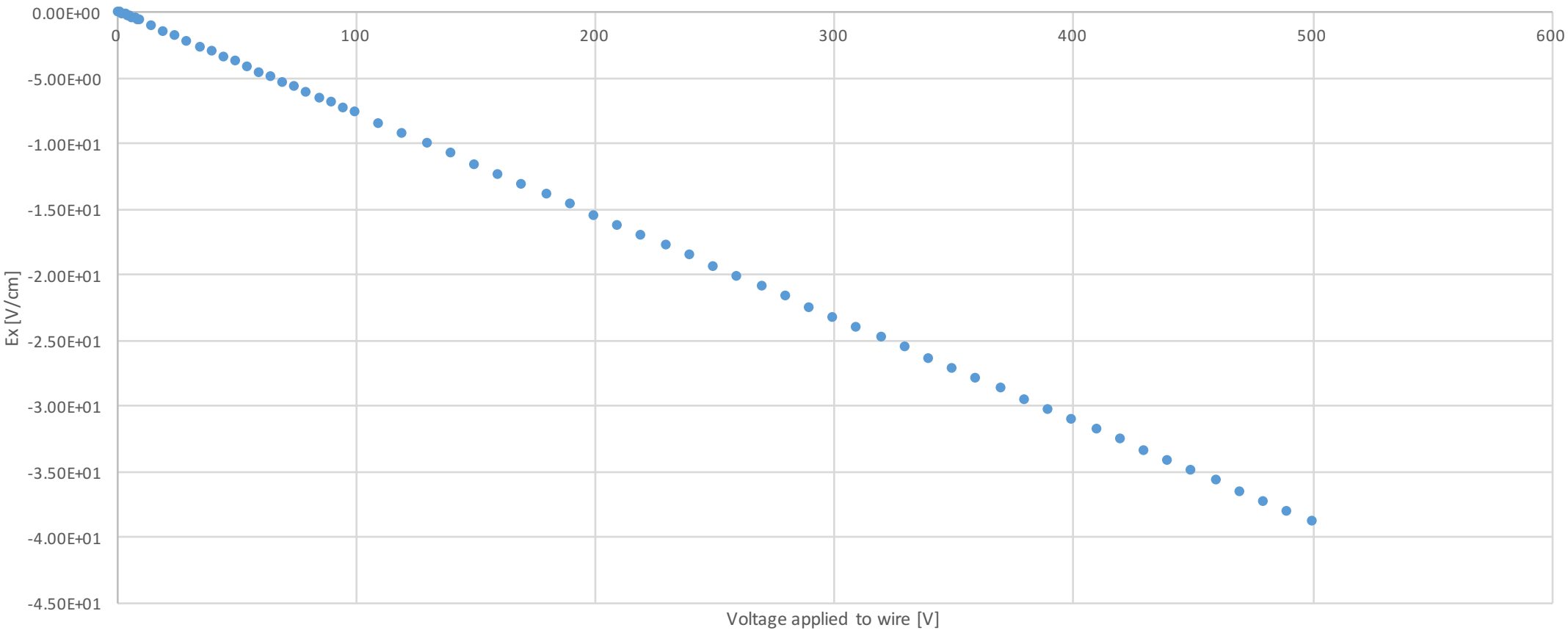

Cable tip: Ey field.

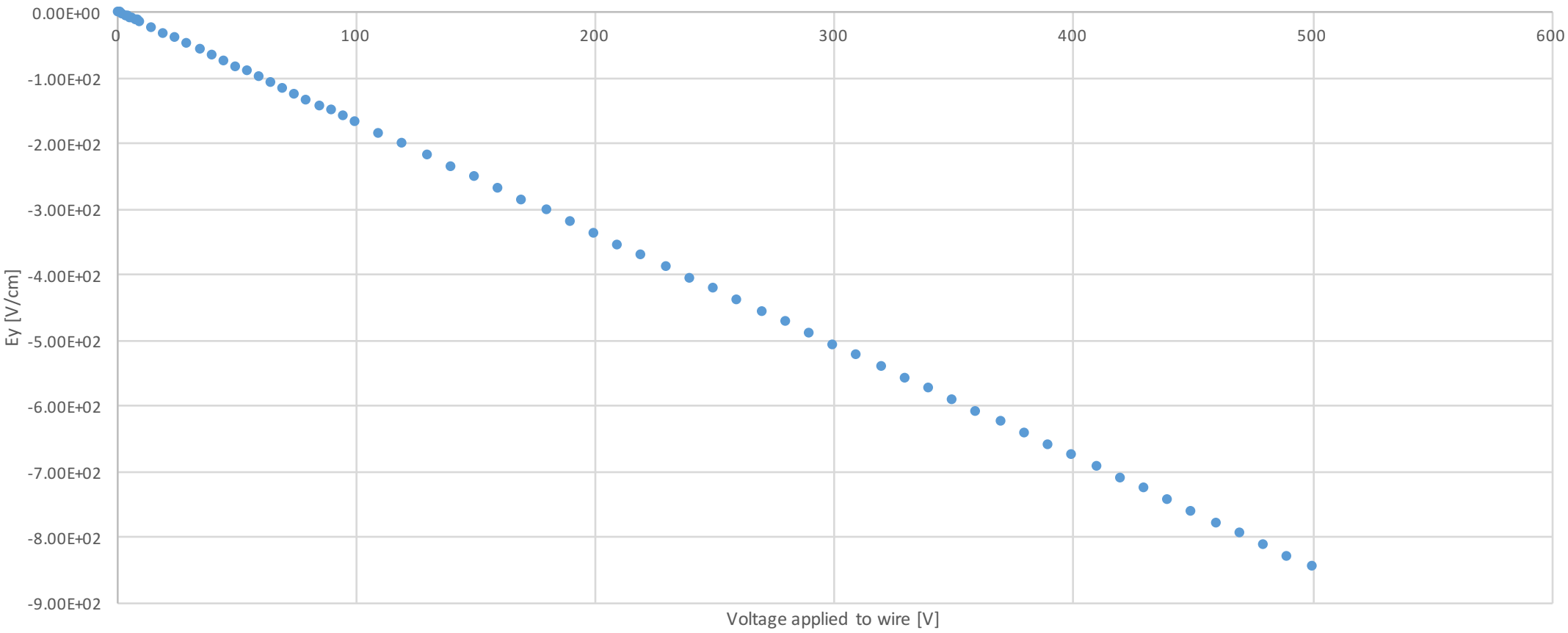

Center of beamline: Ex field.

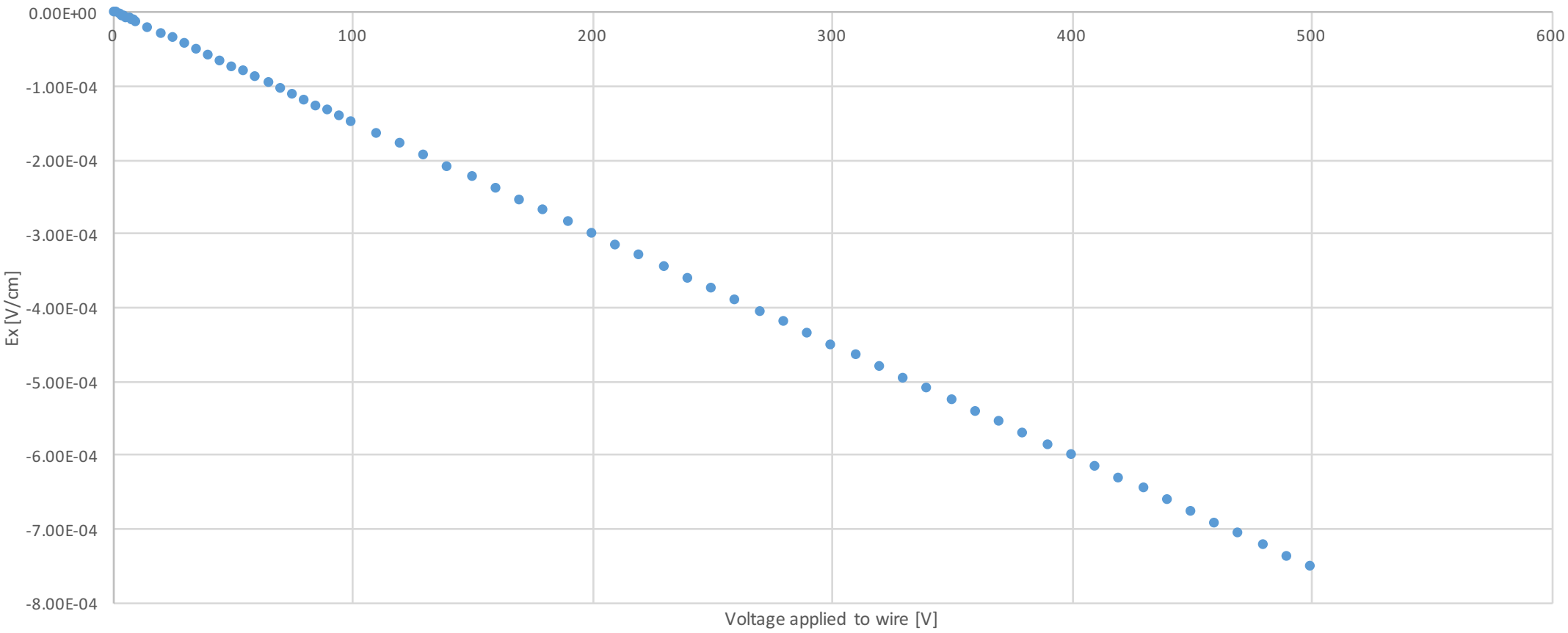

Center of beamline : Ey field.

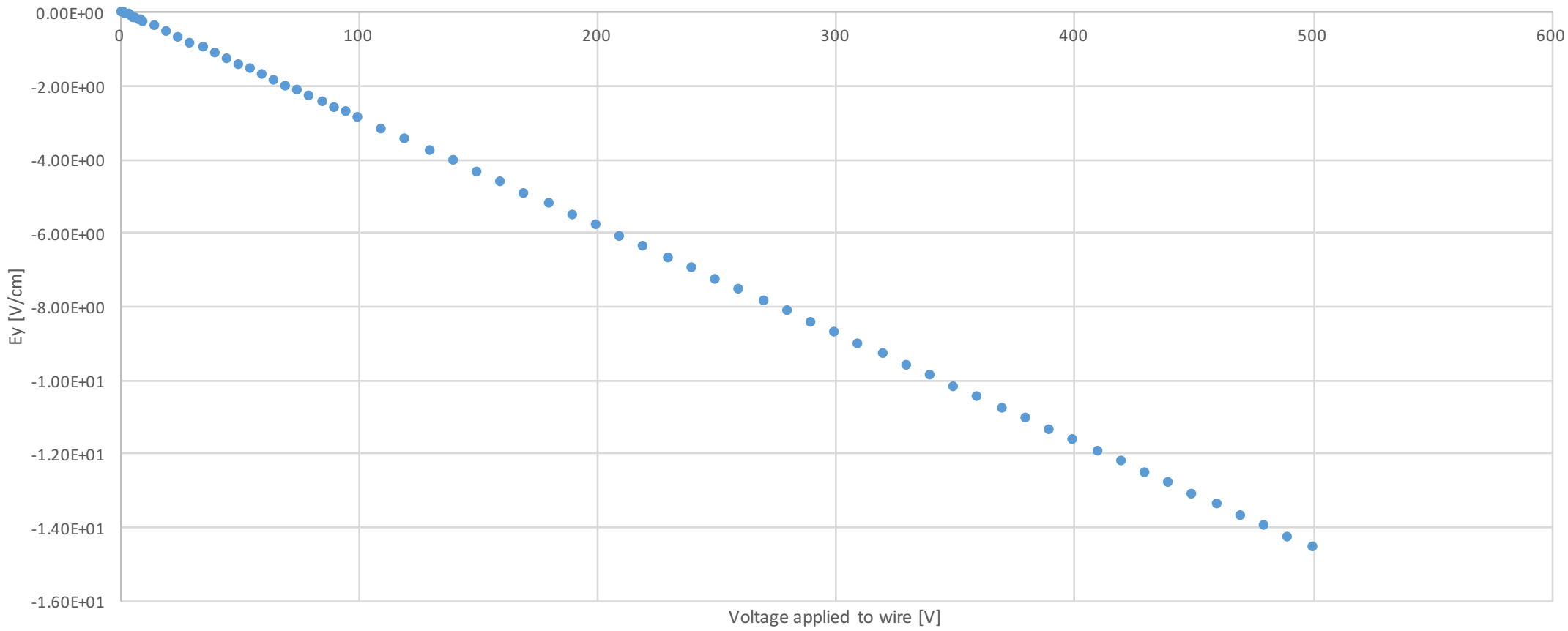

Fin ☺