Simulated and Measured Extreme High Vacuum in the Jefferson Lab Polarized Electron Source

Marcy Stutzman, Philip Adderley,
Veronica Over, Matt Poelker
Thomas Jefferson National Accelerator Facility
Newport News, VA 23601, USA

Thomas Jefferson National Accelerator Facility

- US Department of Energy, 12 GeV electrons, recirculating linear accelerator
- Up to 90% polarization from DC photoemission source
- Electron currents to 200μA beam (CW) to four experimental halls

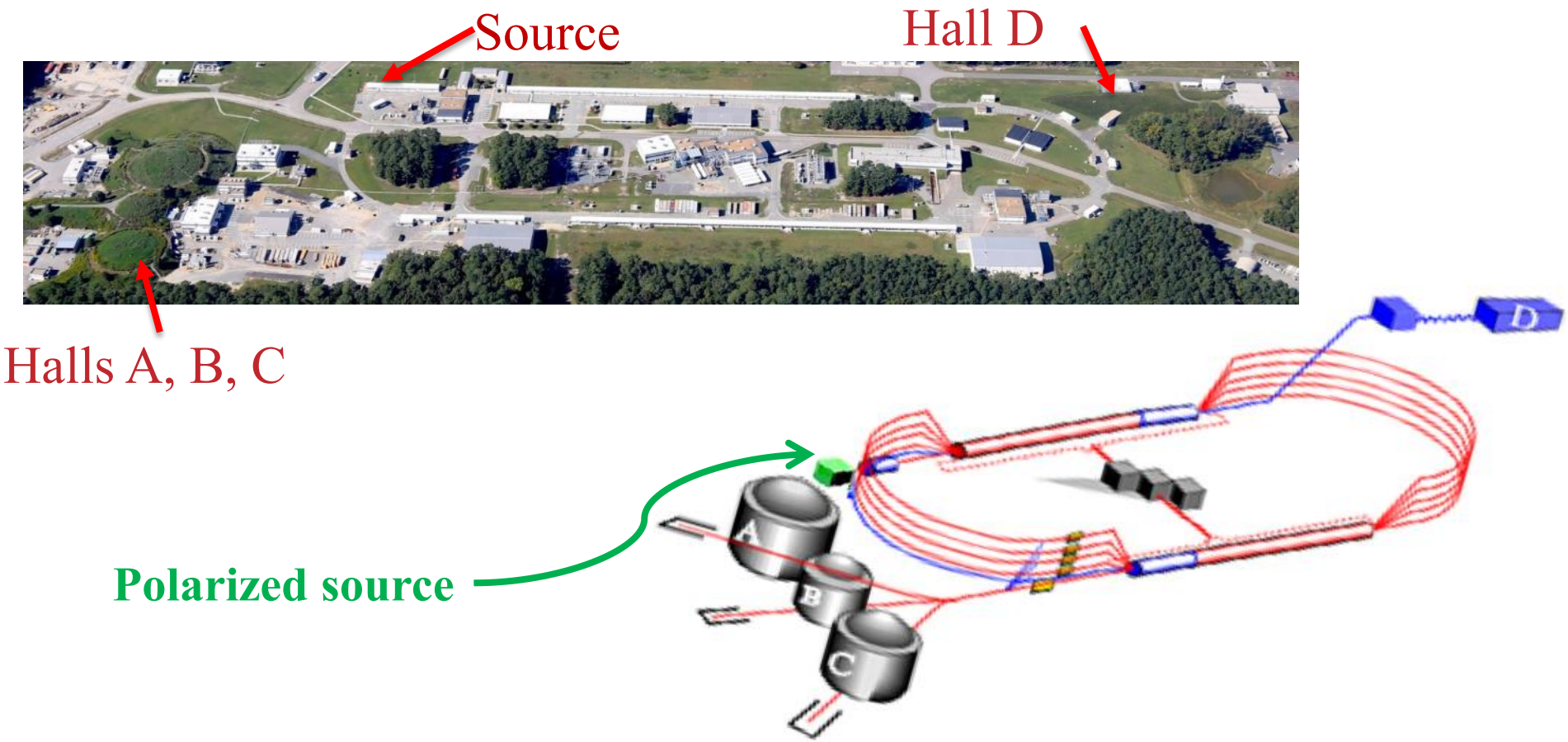

Outline

- Polarized electron sources
- Vacuum improvements implemented
  - Outgassing
  - Pump combinations
- Characterization of pressure
- Initial modeling
  - Conductance effects on pumping
  - XHV pressure distribution
- Future directions

DC Photoemission Source

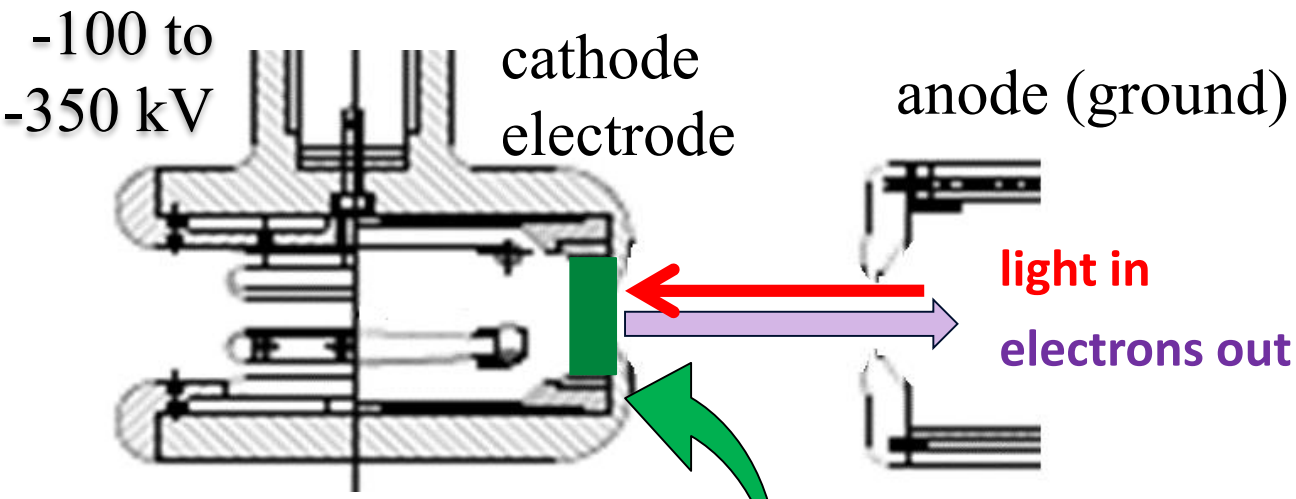

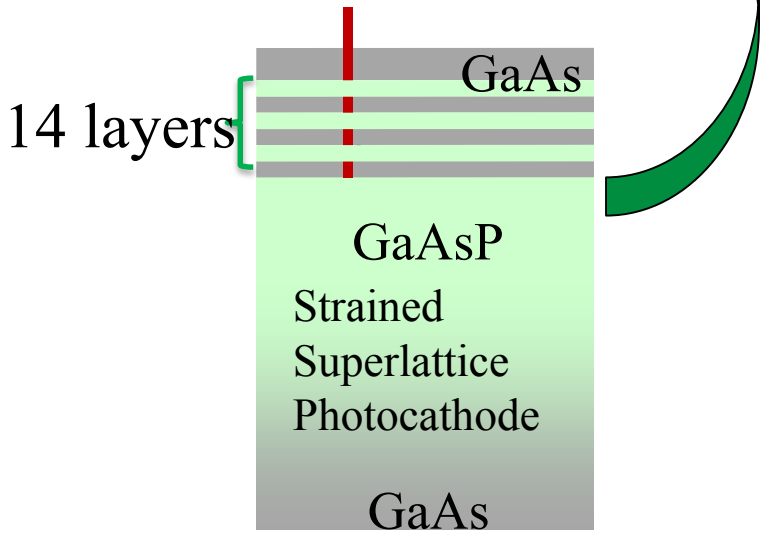

- Polished high voltage electrodes
- Strained superlattice GaAs/GaAsP photocathode
- Surface preparation: Cs, oxygen or fluorine
- Polarized Photoemission
- Residual gasses ionized, limit operational lifetime
- Base pressure approaching XHV ≡ P < 1×10^{-10} Pa

Ion Bombardment

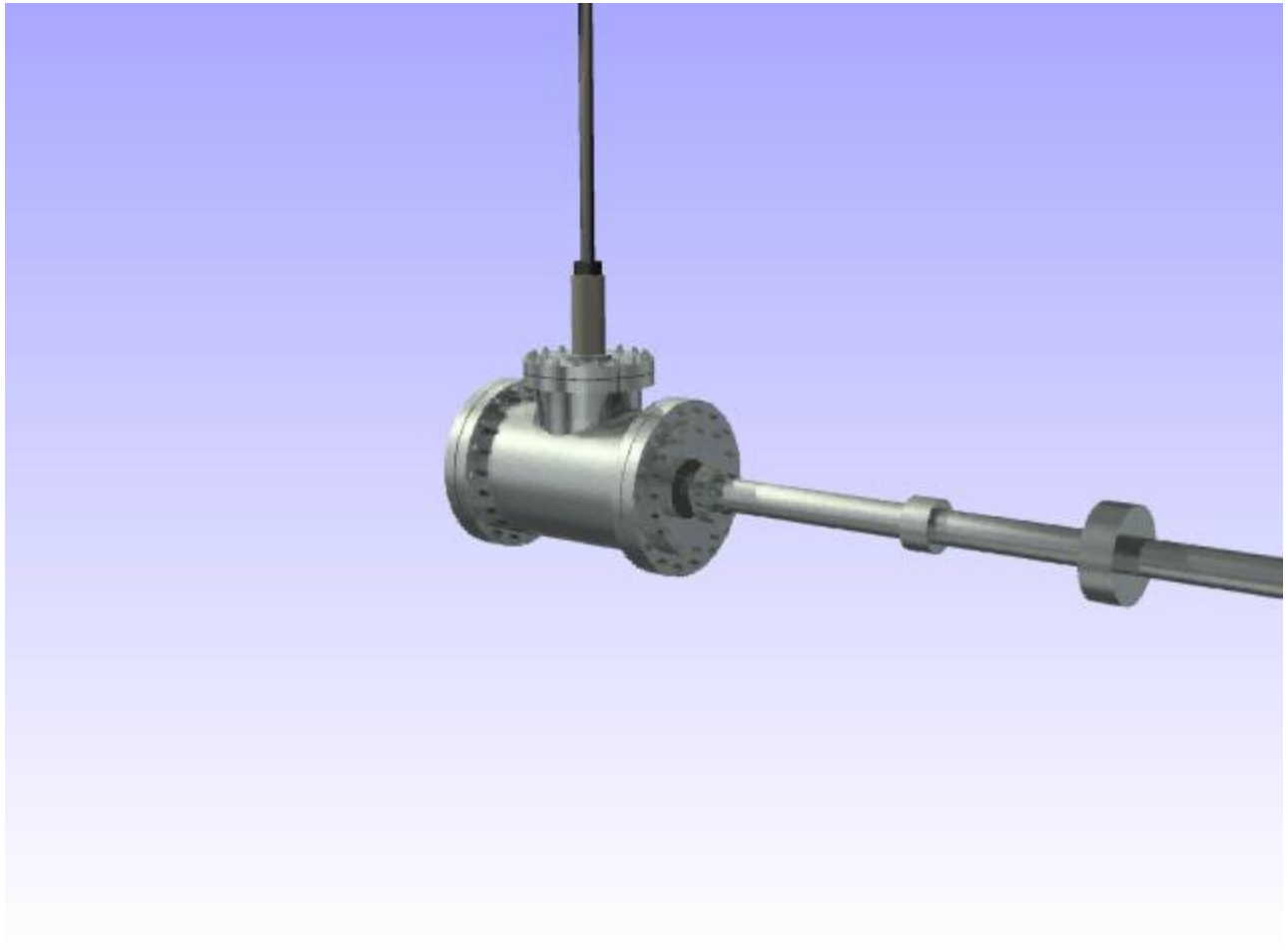

Polarized Source Variations

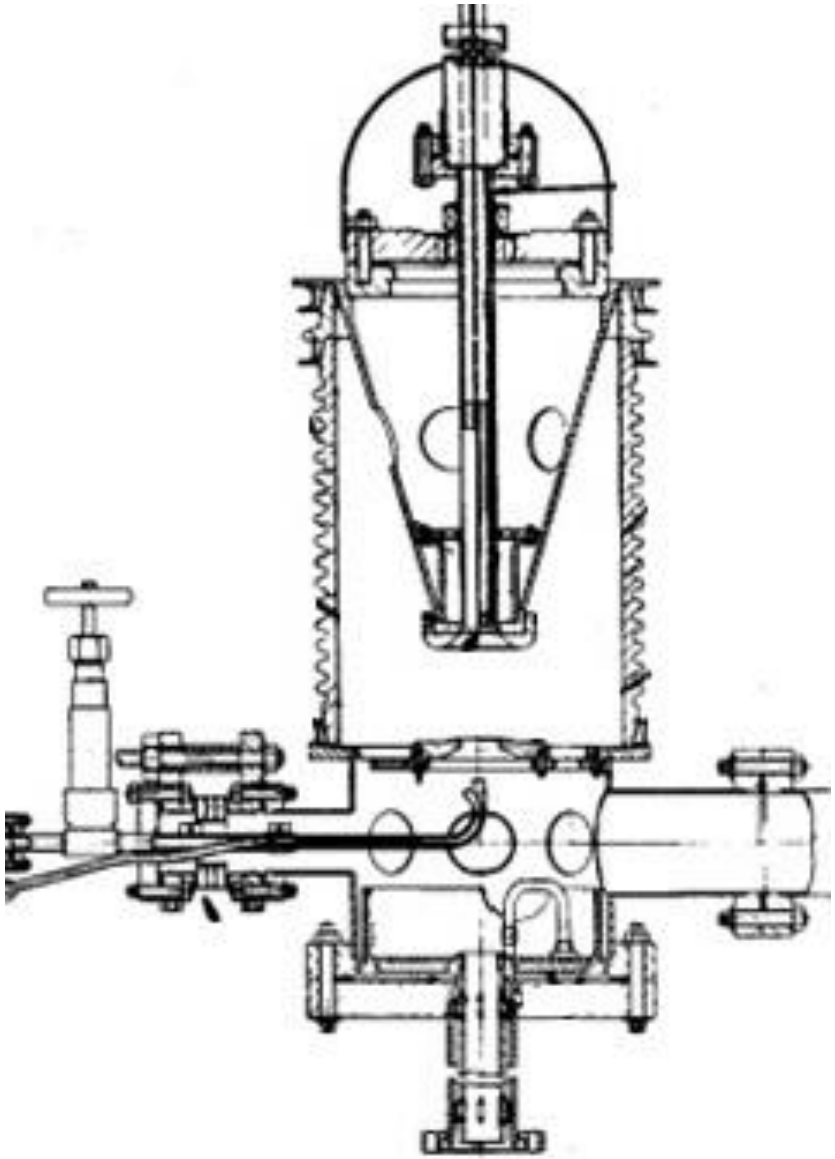

- **Vertical Gun (100 kV)**
  - SLAC design
  - First polarized electron source
  - No NEG pumping
  - No heat treatment
  - Poor electron optics

Polarized Source Variations

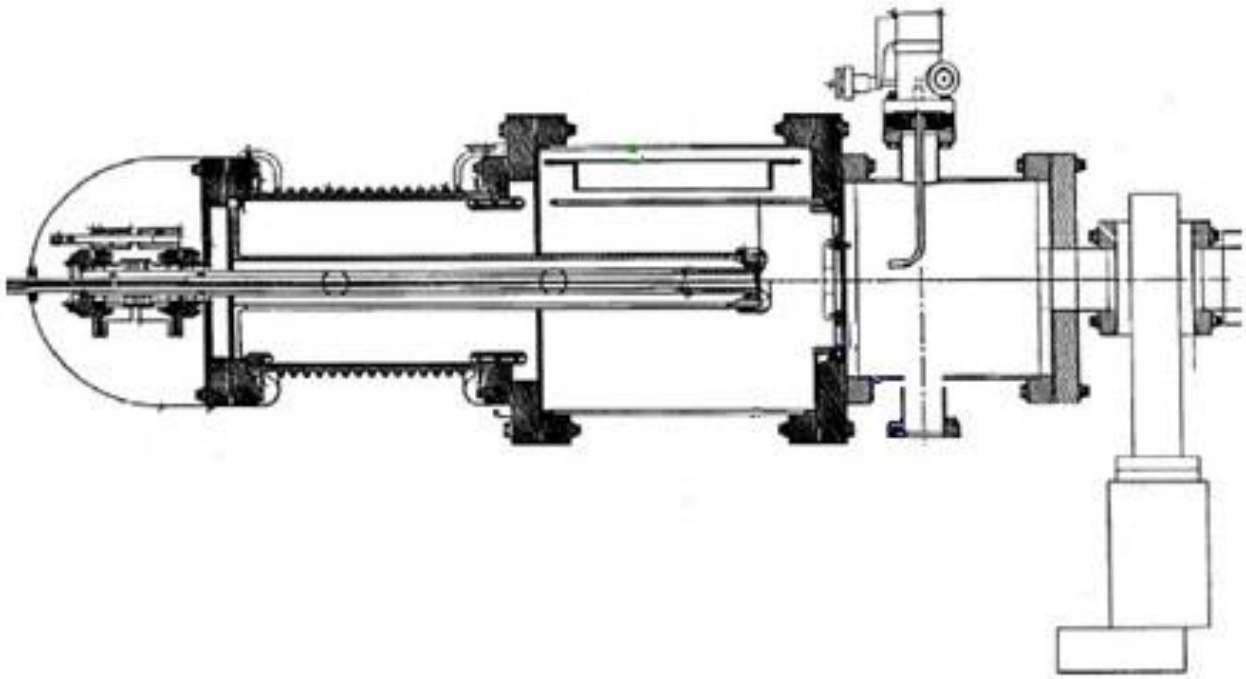

- Vertical orientation
- **Horizontal gun**
  - Improve electron optics
  - Add NEG pumping
  - Cylindrical symmetry
  - No heat treatment
  - Vent and bake to change photocathode
  - Photocathode chemistry (Cs) contaminates electrode, vacuum

Polarized Source Variations

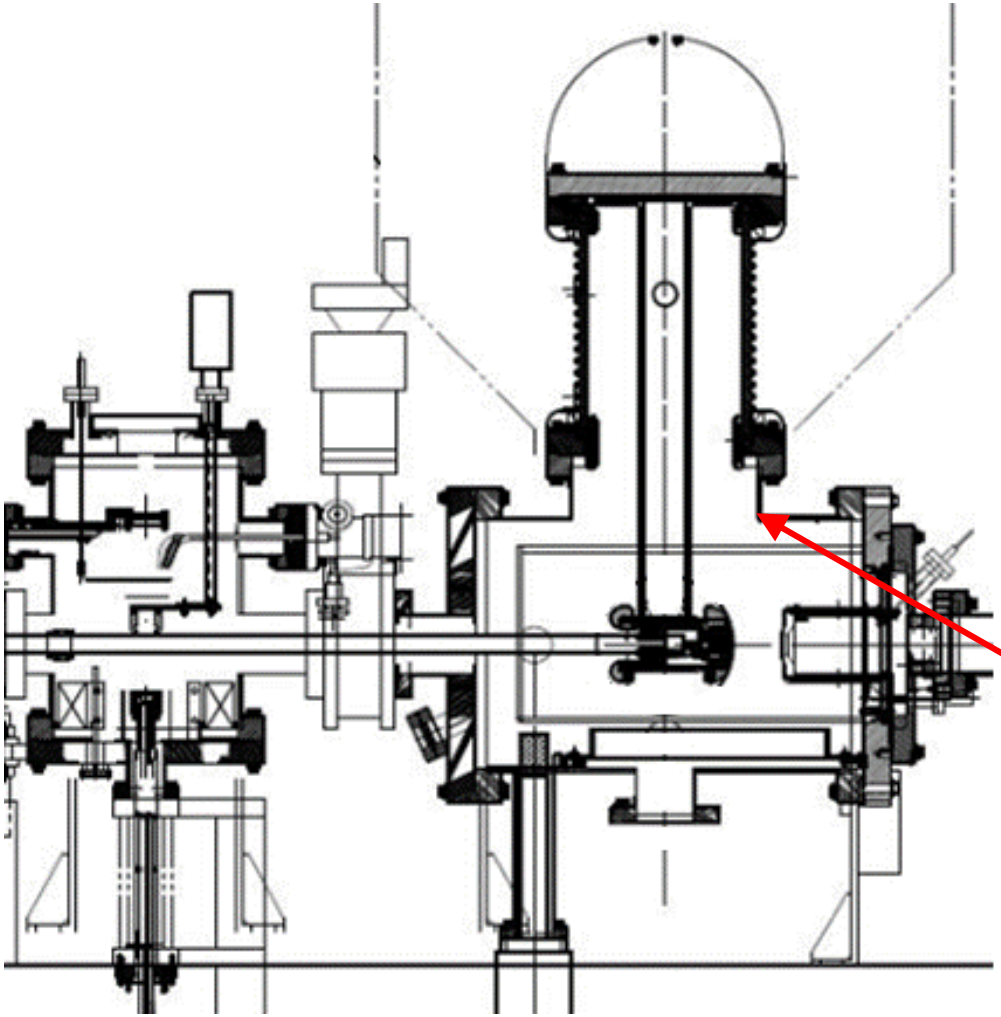

- Vertical orientation (100 kV)
- Horizontal gun (100 kV)
- **Load Lock Gun (100 kV)**
  - Separate chemistry from high voltage
  - Load-Lock for cathodes
  - 400ºC heat treatment
  - NEG coating
  - High field points
  - Thick flange outgassing
  - Cylindrical symmetry broken

Polarized Source Variations

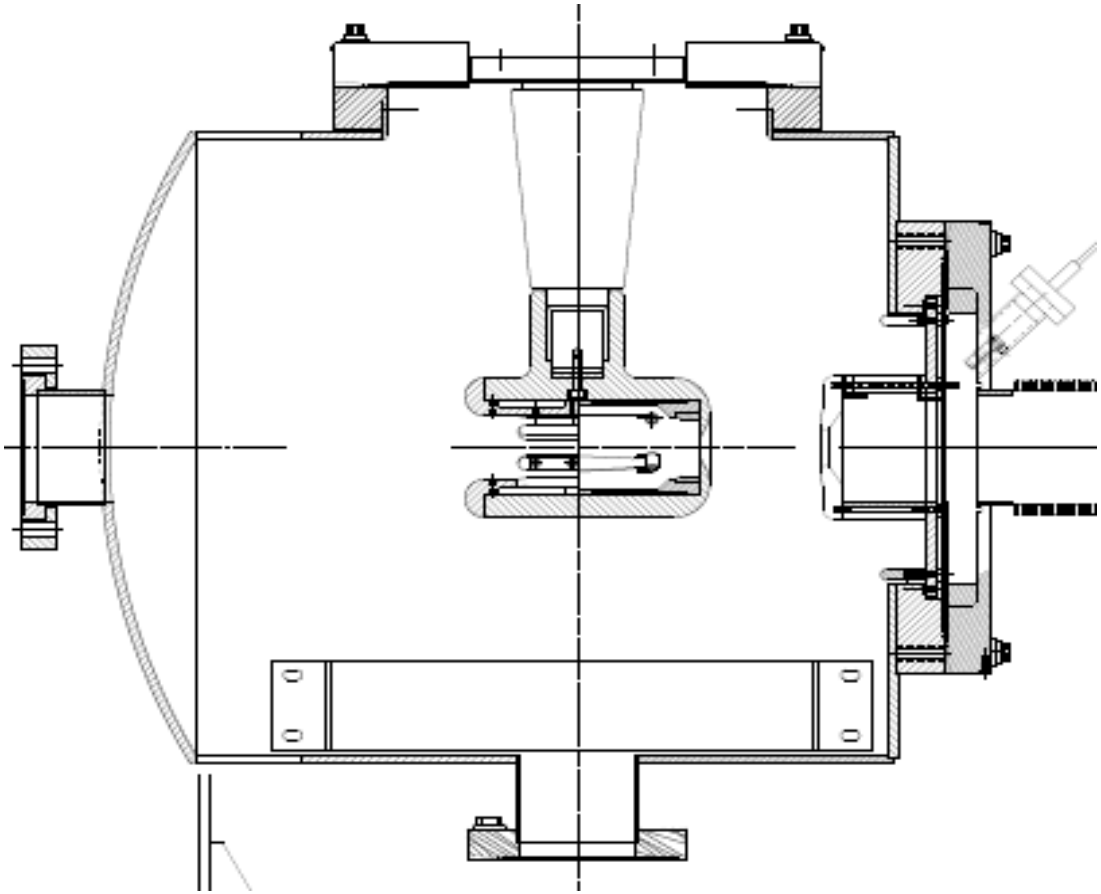

- Vertical orientation (100 kV)
- Horizontal gun (100 kV)
- Load Lock Gun (100 kV)
- **Inverted Insulator Load Lock Gun (130-200 kV)**
  - Eliminate DN275 Conflat flanges
  - Heat treated, NEG coated
  - Cylindrical symmetry broken
  - Line of sight: insulator charging

Polarized Source Variations

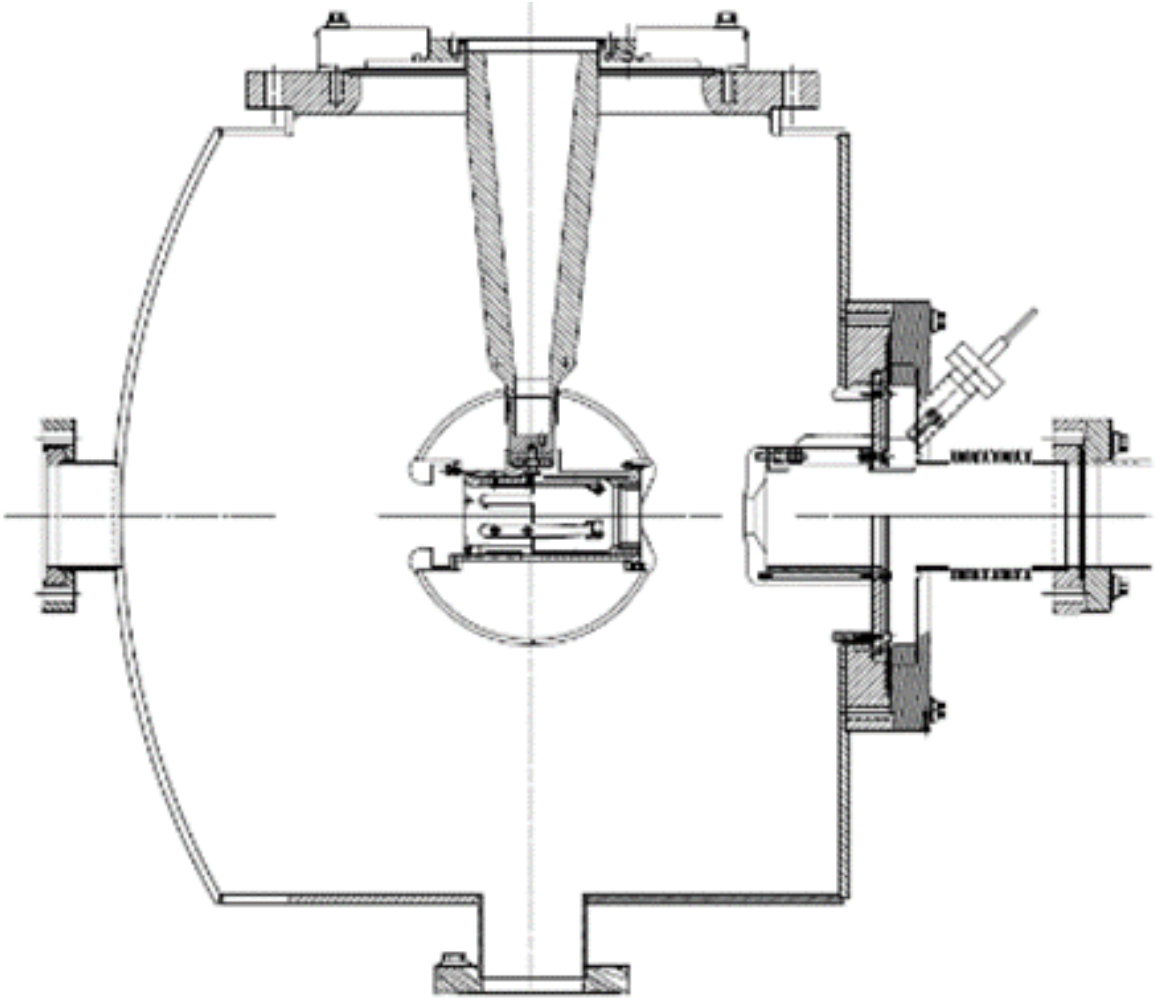

- Vertical gun (100 kV)
- Horizontal gun (100 kV)
- First Load Lock Gun (100 kV)
- Inverted Insulator Load Lock Gun (130 kV)
- **350 kV Inverted Gun**
  - Heat treated
  - NEG coated
  - Larger diameter
  - Doped ceramic
  - Version 1: NEG strip instead of module

20 years of Polarized Electron Guns

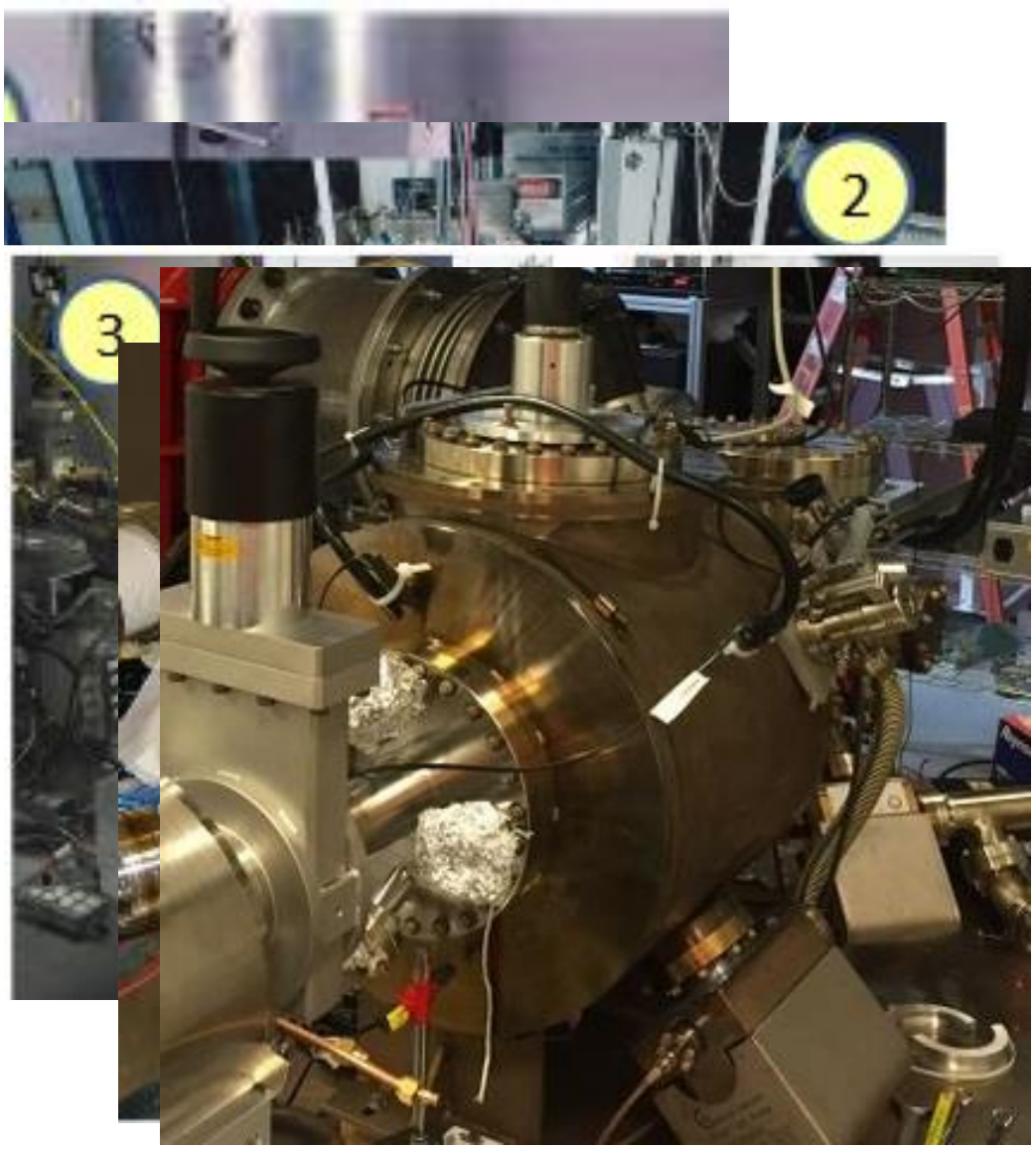

- Initial Polarized Source
- Add NEG pumping
- Load Lock: avoid contamination
- NEG coating
- Eliminate thick flanges
- 400 ºC heat treatment
- Higher voltage: larger diameter

Outline

- Polarized electron sources
- **Vacuum improvements implemented**
  - **Outgassing**
  - **Pump combinations**
- Characterization of pressure
- Initial modeling
  - Conductance effects on pumping
  - XHV pressure distribution
- Future directions

Outgassing reduction: 400ºC heat treatment

- Verify outgassing reduction for 304 stainless steel at 400 ºC
- Measured outgassing as a function of room temperature
- Tested a-Si and TiN coatings
  - TiN coating pumping yields artificially low outgassing
  - a-Si outgassing similar to underlying steel

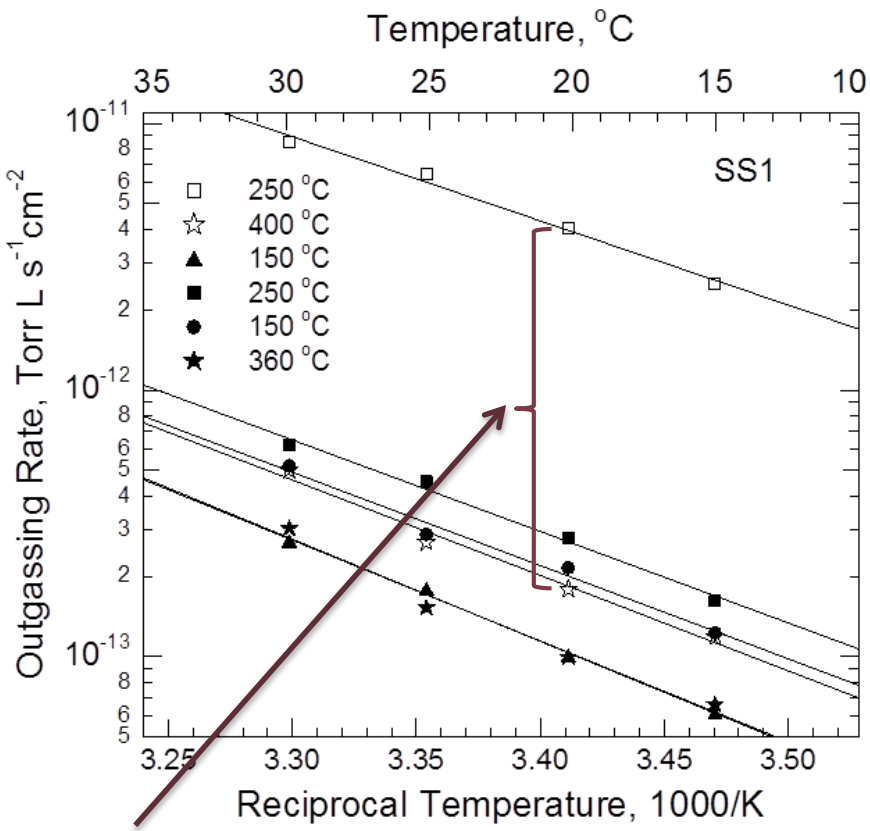

Factor of 20 reduction in outgassing after 400°C heat treatment

C. D. Park, S. M. Chung, Xianghong Liu, and Yulin Li JVST A 26, 1166 (2008)

M.A. Mamun, A.A. Elmustafa, M.L. Stutzman, P.Adderley, and M.Poelker JVSTA,32, 021604 (2014)

NEG pumping configurations

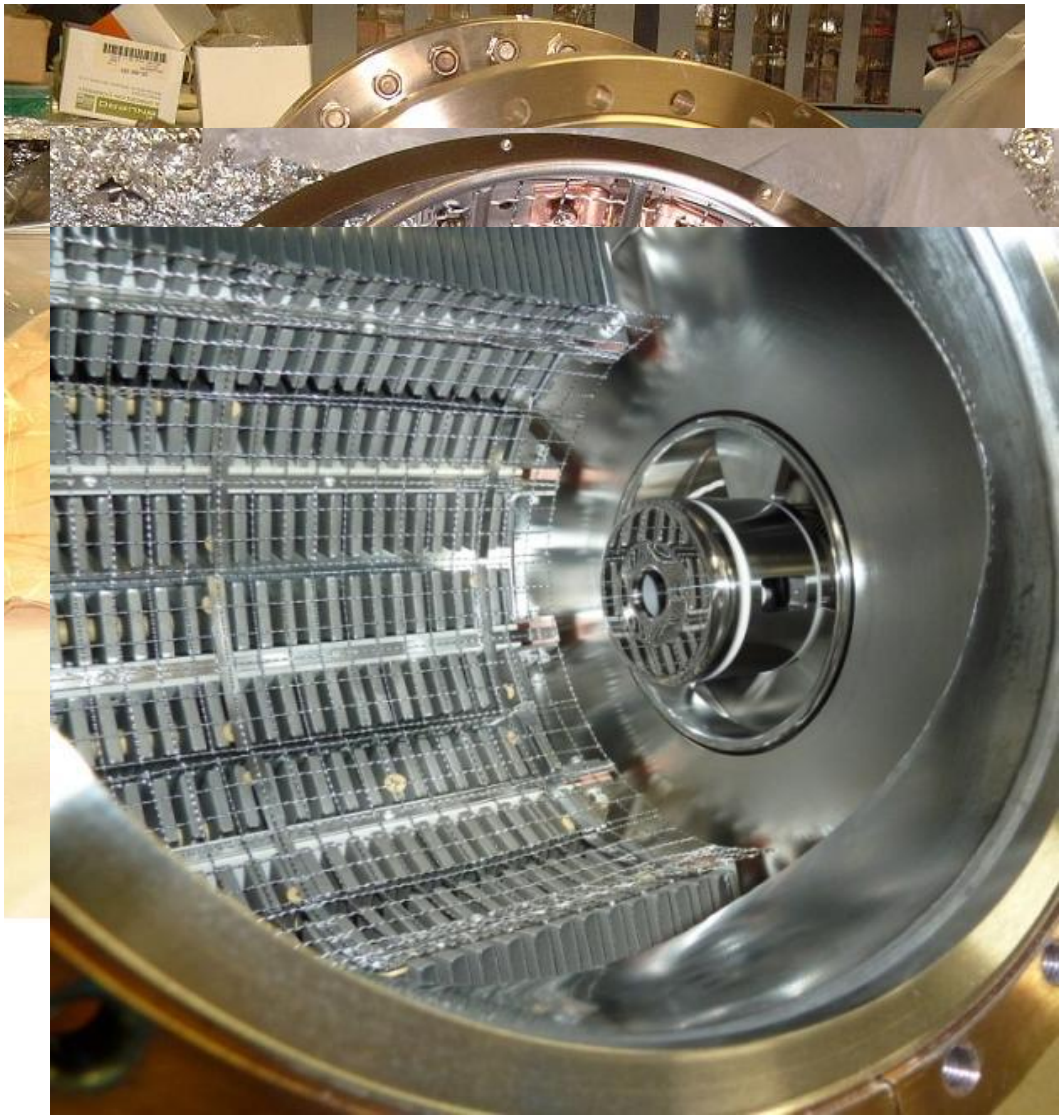

- Initial design
  - 360º array surrounding cathode – anode gap
- Load Lock
  - Hemisphere array
- Inverted Gun
  - Rotate modules: eliminate line of sight to walls
- 350 kV Inverted Gun
  1. Strips instead of modules
  2. Rotate back to open configuration

CEBAF Polarized Inverted Gun Vacuum

Installed pumping

- SAES WP1250 modules x 10 (5600 L/s total)
- Gamma SEM/XHV ion pump (45 L/s)

~ 25 micron TiZrV coating

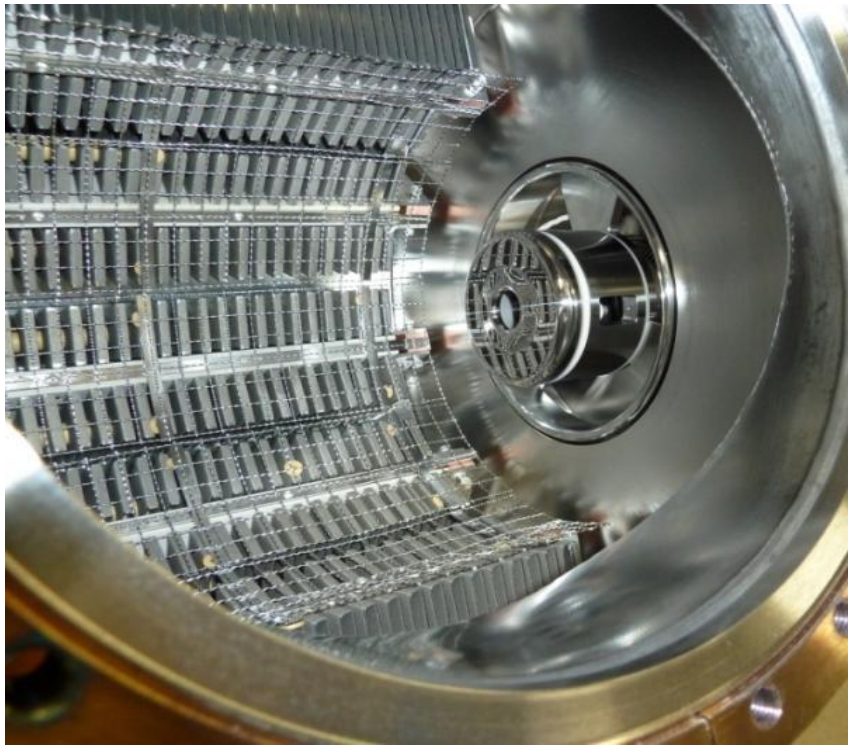

Measured pressure ~1.3×10^{-10} Pa (extractor gauge, x-ray limit measured and subtracted)
Charge Lifetime: ~200 Coulombs
System works for CEBAF

Two questions:

- Is my pressure measurement reliable?
- Do I need to improve vacuum?

Future Polarized Sources

- CEBAF Charge Lifetime: ~200 Coulombs = 20 days at 100 uA
- Future CEBAF upgrade: increase voltage, simplify acceleration

Extrapolating to e-RHIC requirement of 10 mA (100x typical, 2.5x max): 100 Coulomb lifetime < 6 hours

- Creative designs for future sources
- 10-50 mA polarized electron source for e-RHIC using "Gatling Gun" with up to 20 photocathodes

Vacuum improvements still essential for higher currents

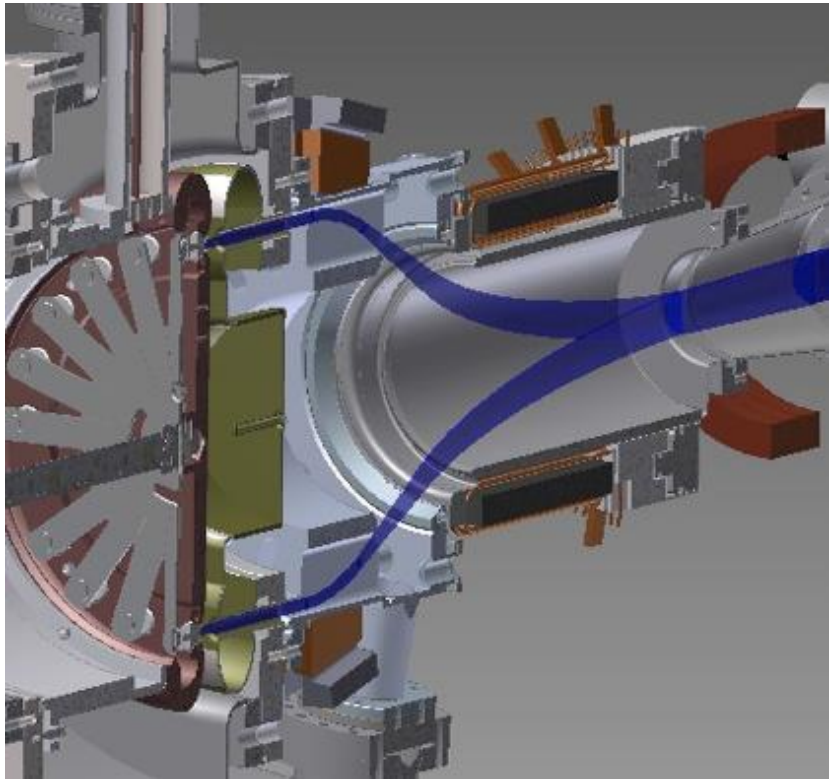

Outline

- Polarized electron sources
- Vacuum improvements implemented
  - Outgassing
  - Pump combinations
- **Characterization of pressure**
- Initial modeling
  - Conductance effects on pumping
  - XHV pressure distribution
- Future directions

XHV gauges

- Extractor gauge
  - x-ray limit reduced through geometry
- Axtran gauge
  - Bessel box energy discrimination
  - electron multiplier for low current measurements
- Watanabe 3BG (Bent Belt Beam) gauge
  - 230° deflector BeCu housing
  - JVSTA **28**, 486 (2010)

Axtran

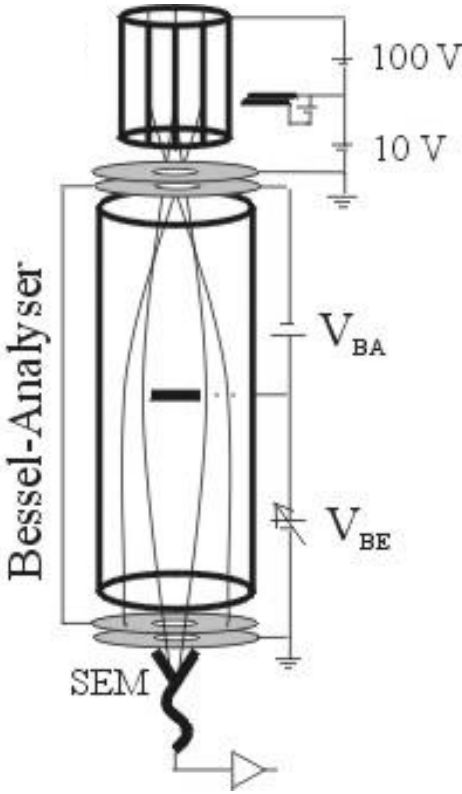

Pressure measurement backgrounds

$$I_{gas} = I_{measured} - \underbrace{I_{x-ray}}_{\text{measured}} - \underbrace{I_{heating}}_{\text{measured}} - \underbrace{I_{ESD}}_{\text{minimized}} + \ldots$$

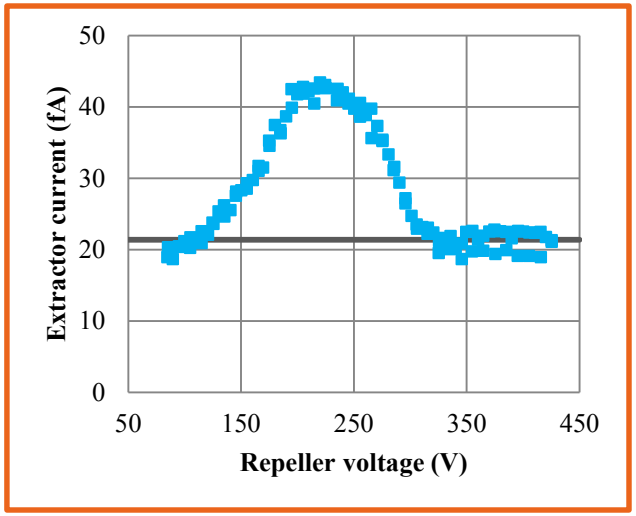

x-ray limit

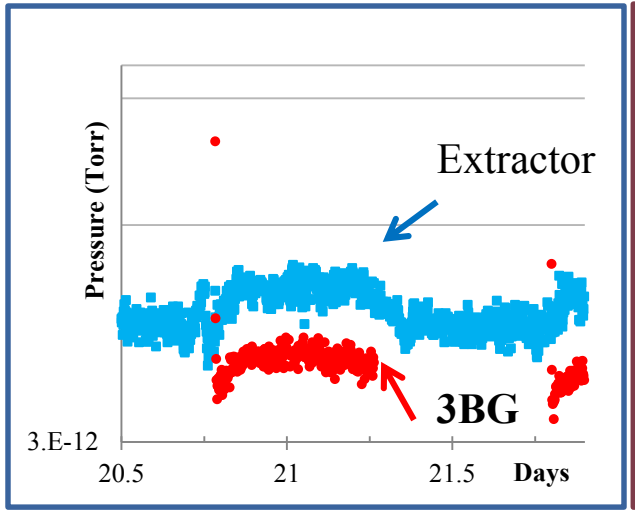

heating

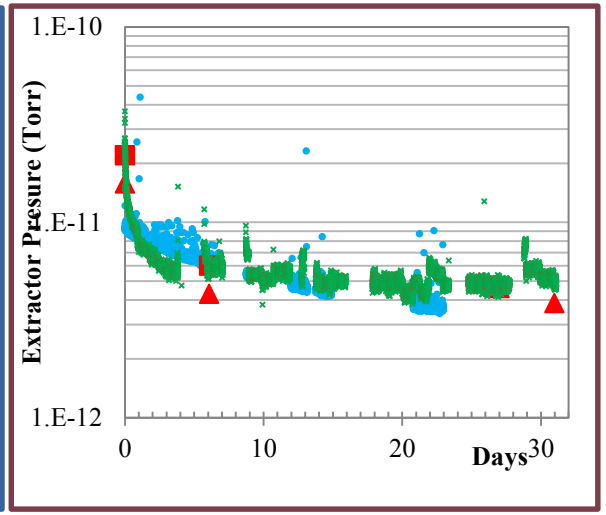

ESD

Test Chamber Base Pressure

- Getters
  - 4 x WP950 modules
  - 1 GP500 pump
- Ion pump
  - 45 *l*/s SEM style Ti/Tan
- Outgassing rate
  - 1.3×10^{-10} Pa·m·s^{-1}
- Volume: 40 *l*
- Area: 8000 cm^2

Simple calculations: expected pressure

5×10^{-11} Pa

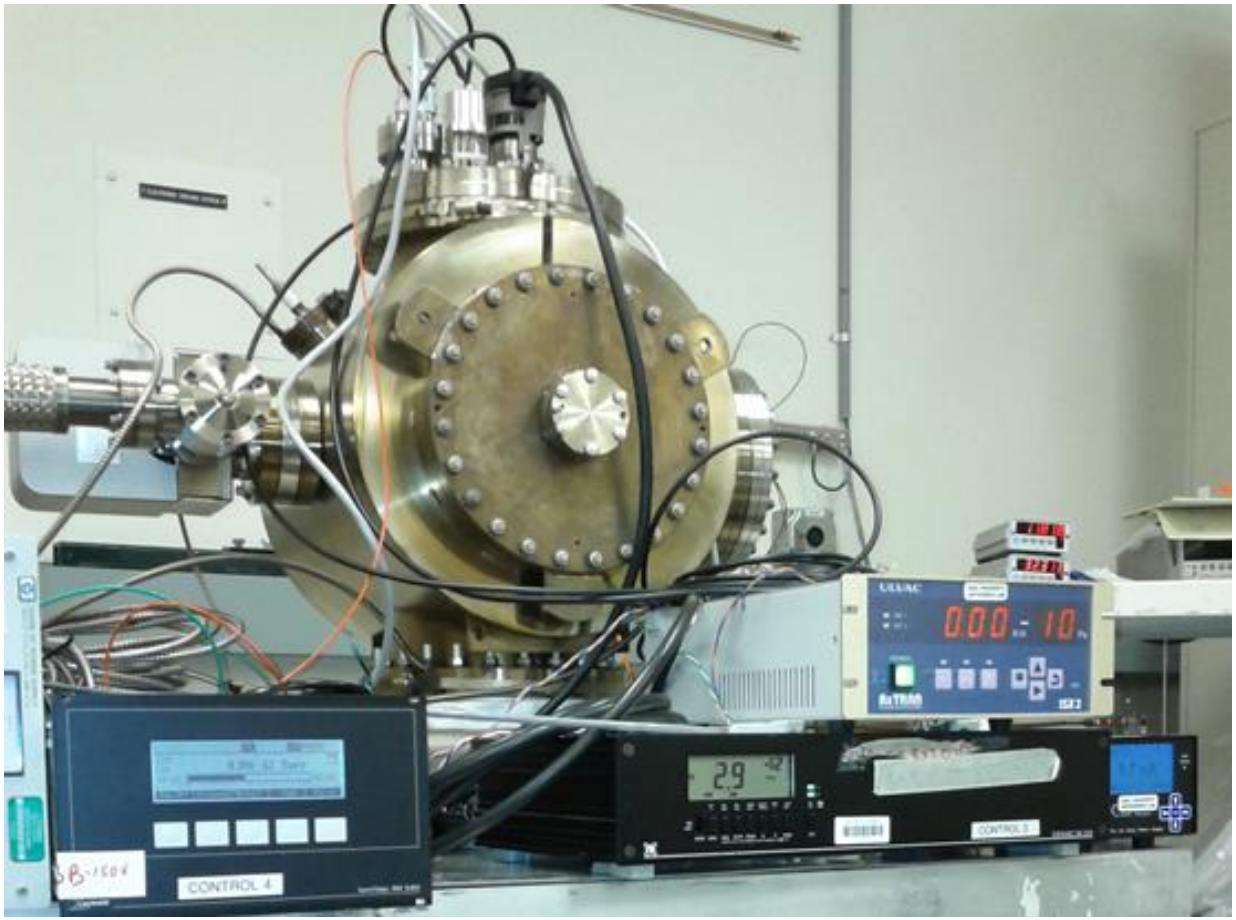

Measured Pressure: 3 XHV gauges

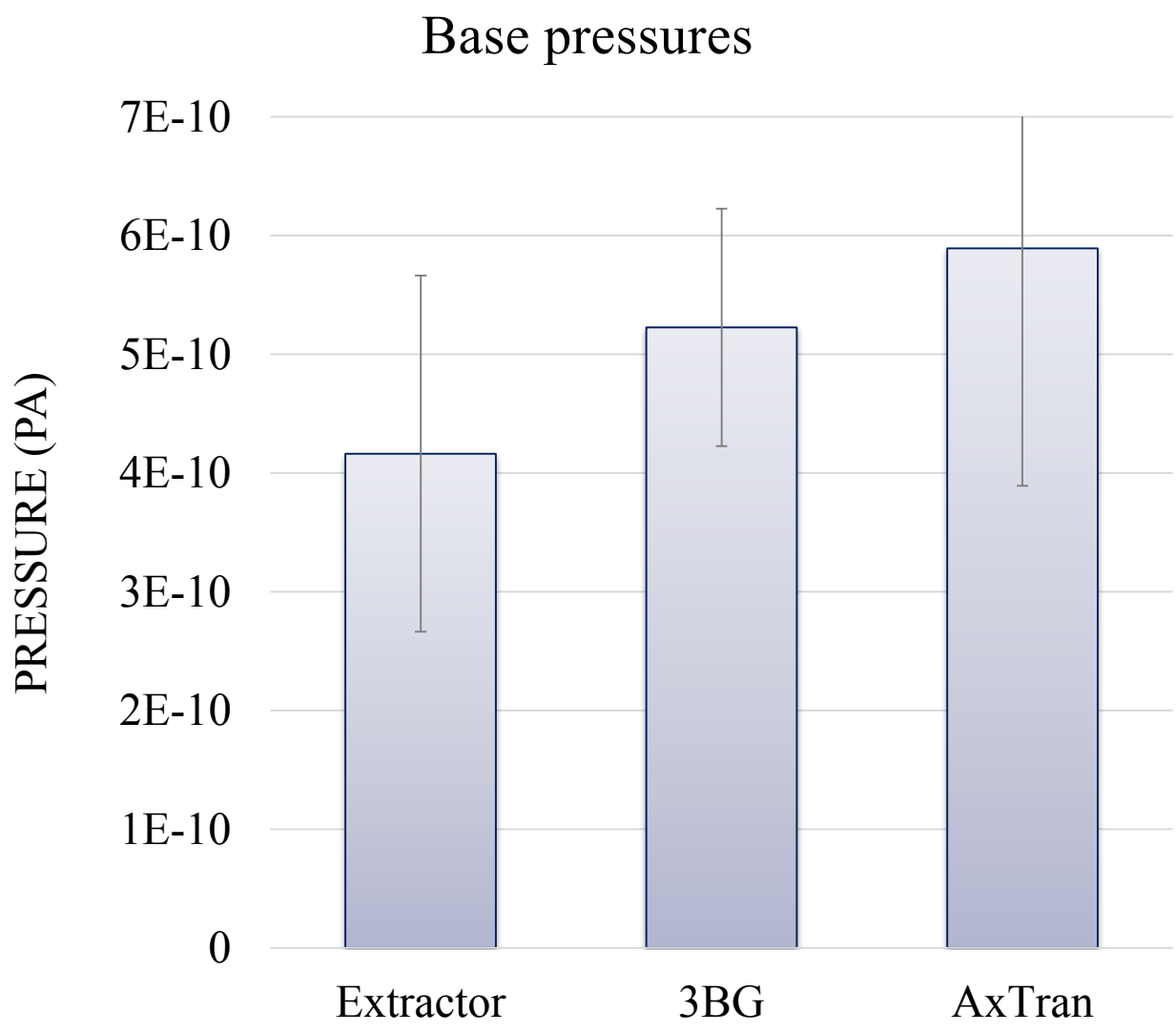

- Pressure ~ 5×10^{-10} Pa
- Minor differences between three gauges
  - Rely on manufacturer sensitivity
  - Should be sent for calibration
- Measured pressure ~10 times calculated pressure

Outline

- Polarized electron sources
- Vacuum improvements implemented
  - Outgassing
  - Pump combinations
- Characterization of pressure
- **Initial modeling**
  - **Conductance effects on pumping**
  - **XHV pressure distribution**
- Future directions

Molflow+ simulations

Molflow+ software

R. Kersevan and J.-L. Pons, JVSTA 27, 1017 (2009);

Input:

- 3D CAD model
- Outgassing
- Pump speed, locations

Output:

- Pressure distribution

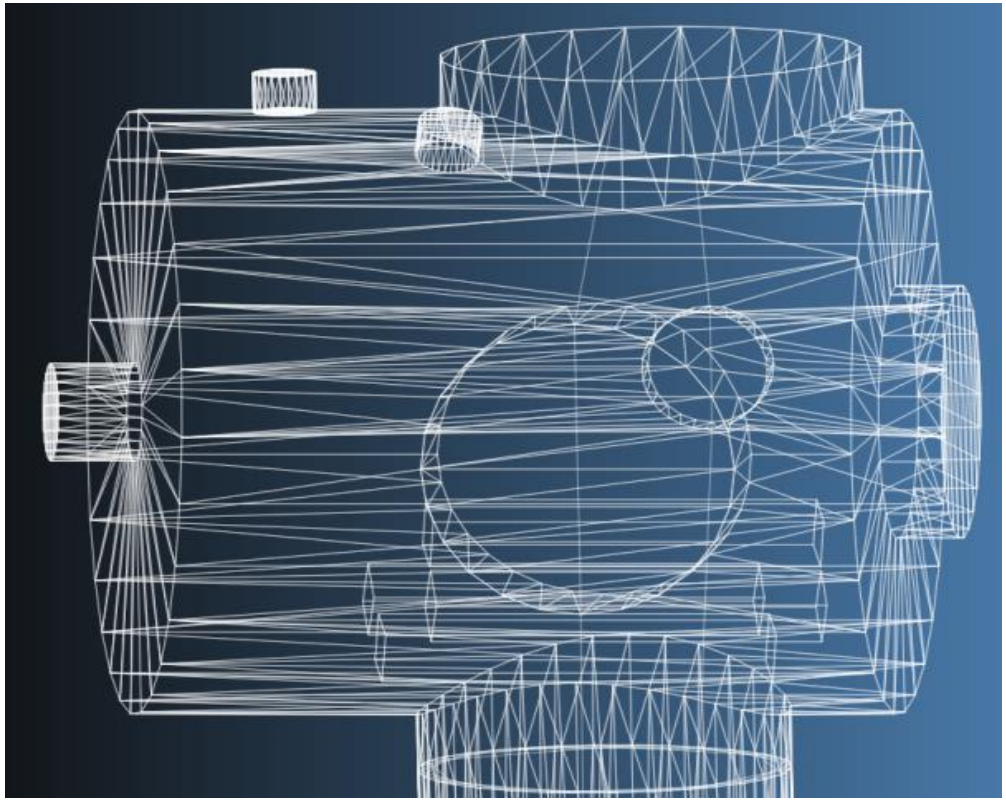

Chamber with ion and NEG pumps

Test Particle Monte Carlo

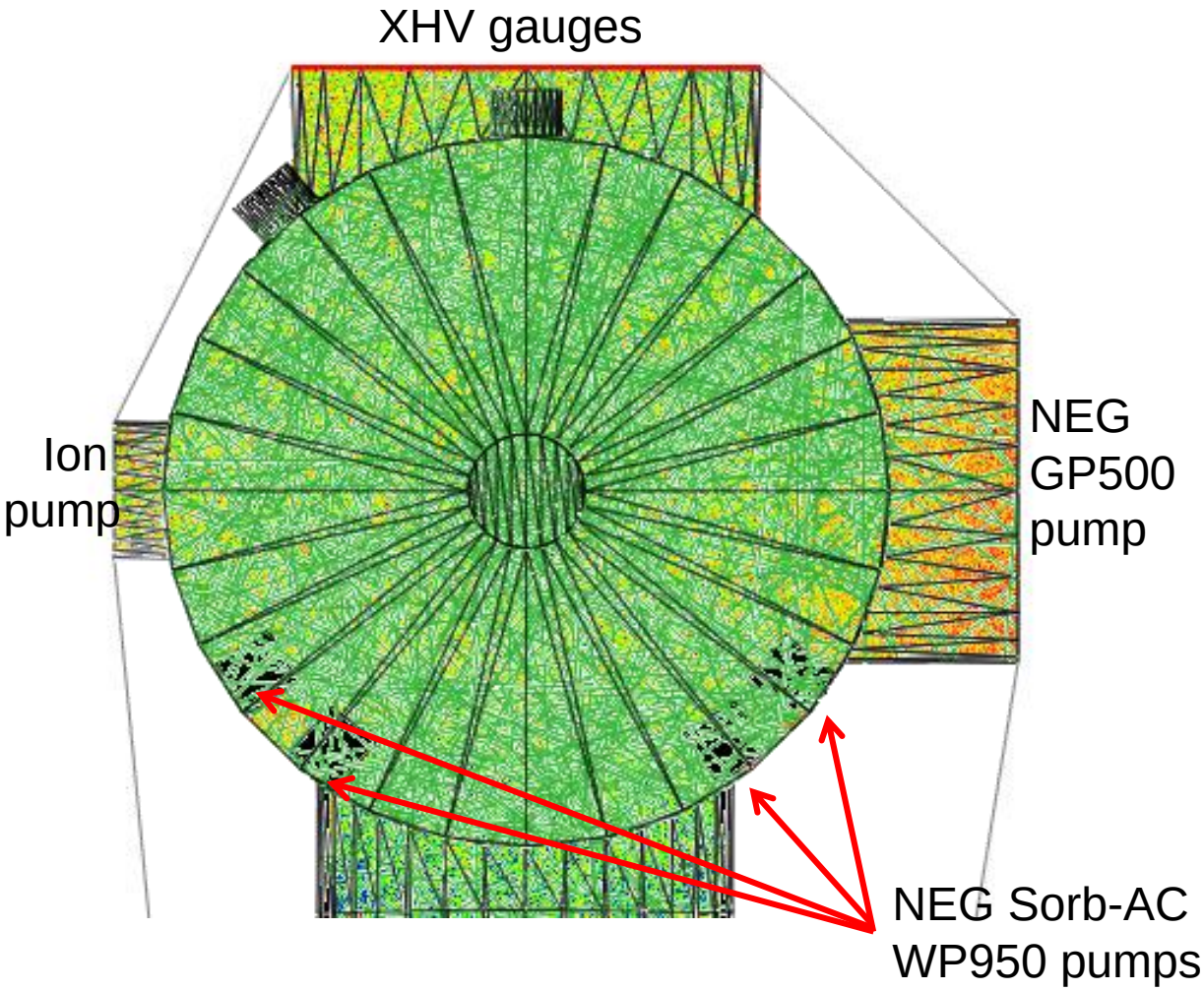

- Tracks simulated particles
  - Pump speeds defined by sticking coefficients
  - Outgassing rates as measured previously
  - Compare simulation with measured results

Molflow+ simulated pressure

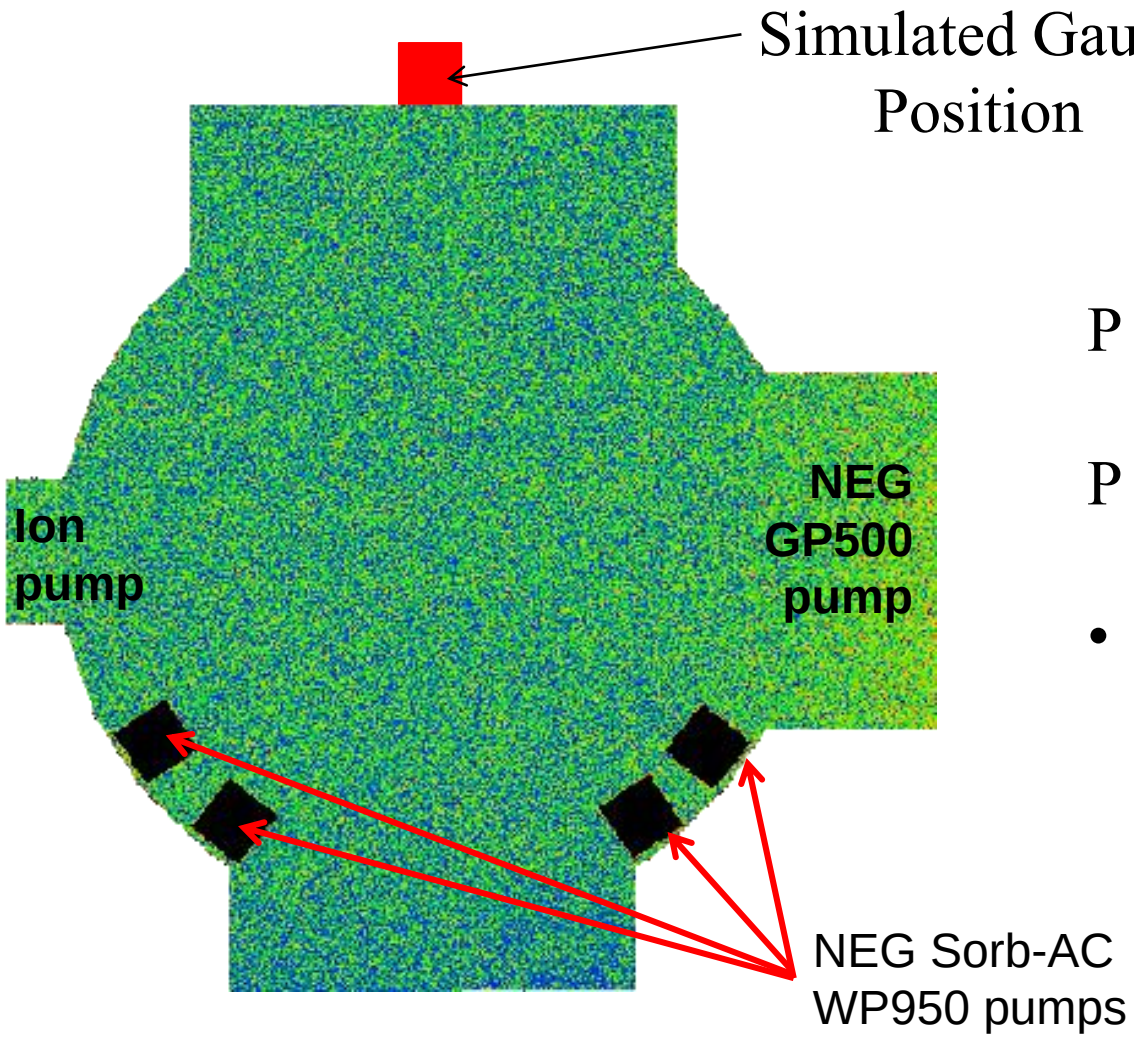

P (simulated) = 1.6×10^{-12} mbar

P (measured) = 4-6 $\times 10^{-12}$ mbar

- Much better agreement than simple calculations

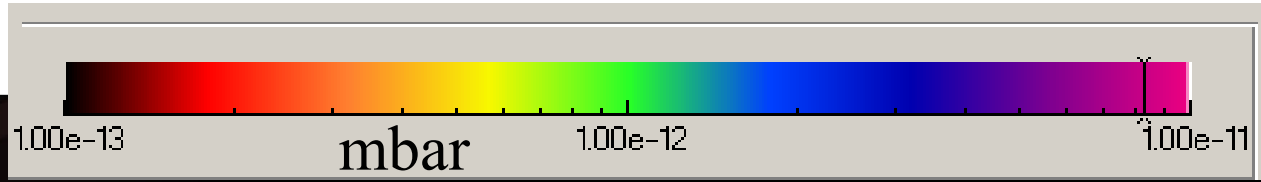

Simulations and Experiment: XHV Cryopumping

- Can we add additional pumping beyond NEG and Ion pumps?
  - Are ion pumps limiting base pressure?
- Leybold Bakable CP
- LN_2 chill circuit
  - 10K cryosorber
  - 30K single shield wall

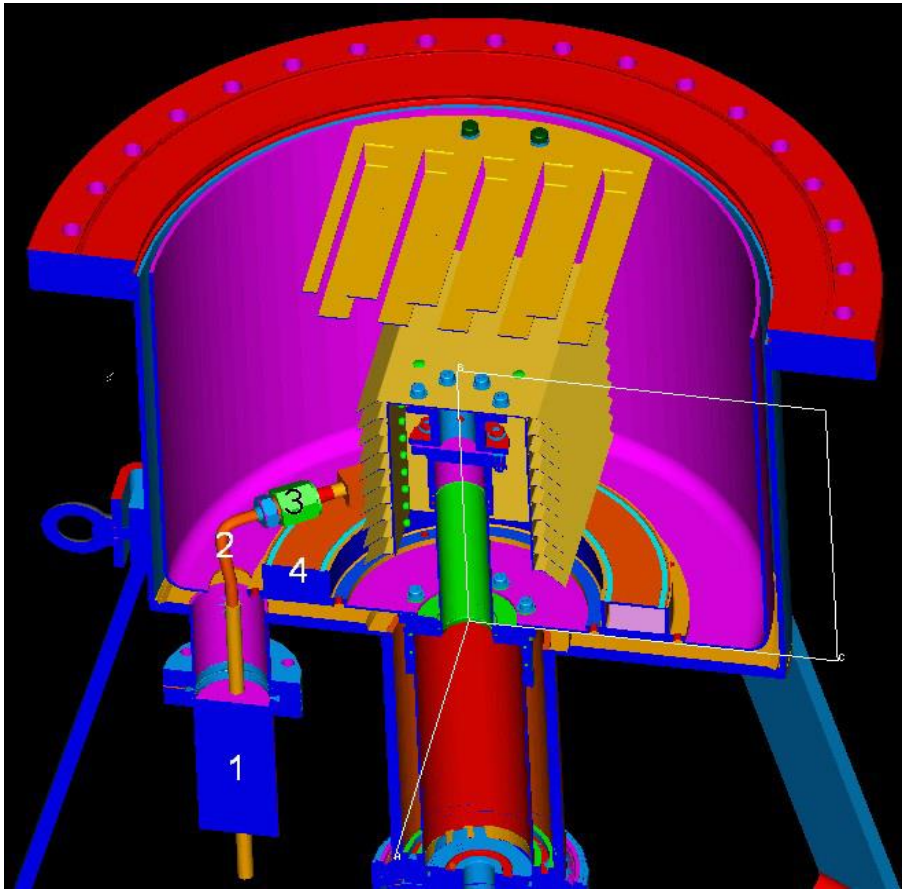

Test Particle Monte Carlo

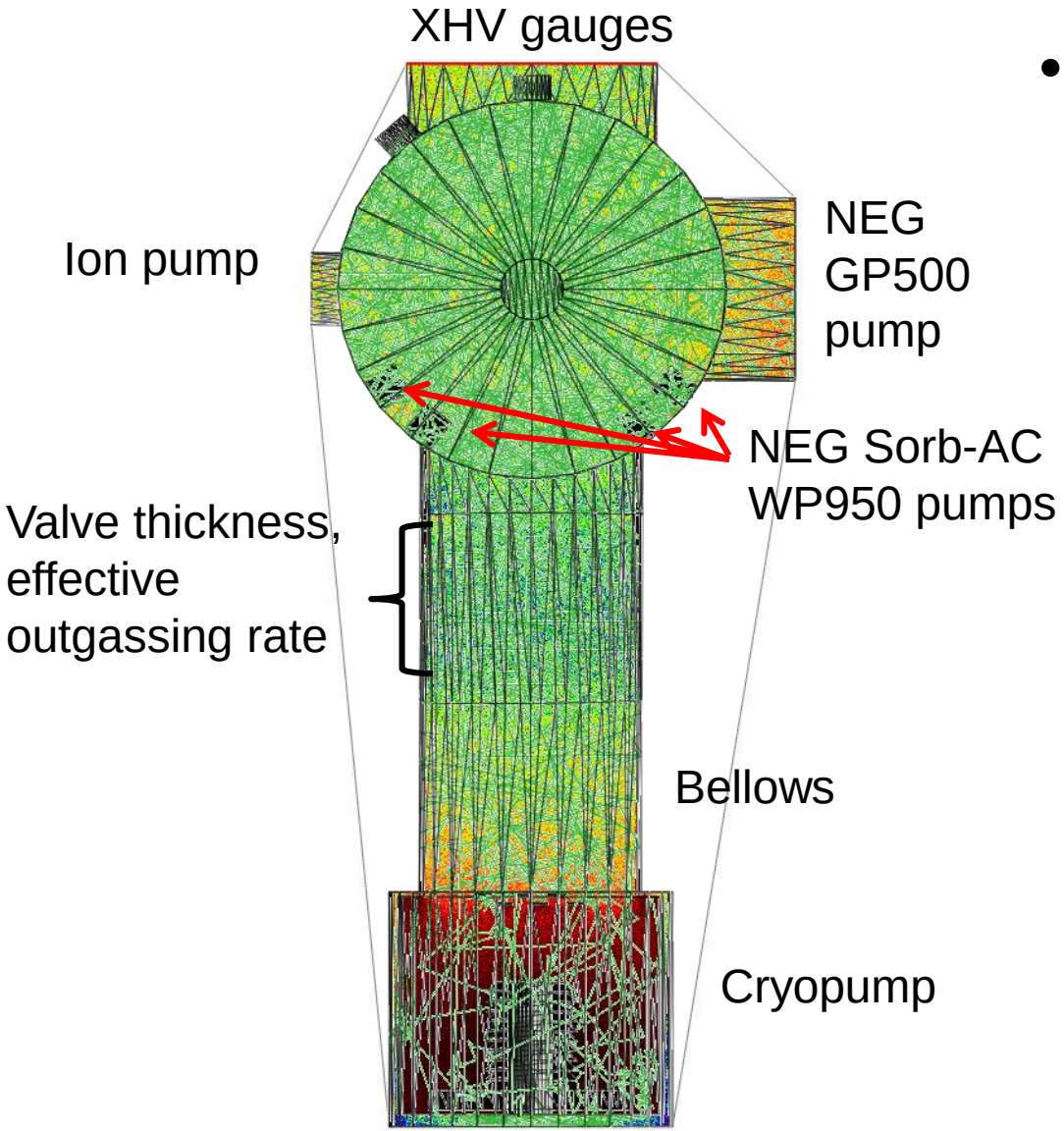

- Tracks simulated particles
  - Pump speeds defined by sticking coefficients
  - Outgassing rates as measured previously
  - Compare simulation with measured results

Molflow+ cryopump system simulations

gauge position

Valve Closed

P(simulated)= 1.6×10^{-12} mbar

Simulations show outgassing from valve, conductance severely limit cryo-pumping on chamber

Valve Open

P(simulated)= 2.7×10^{-12} mbar

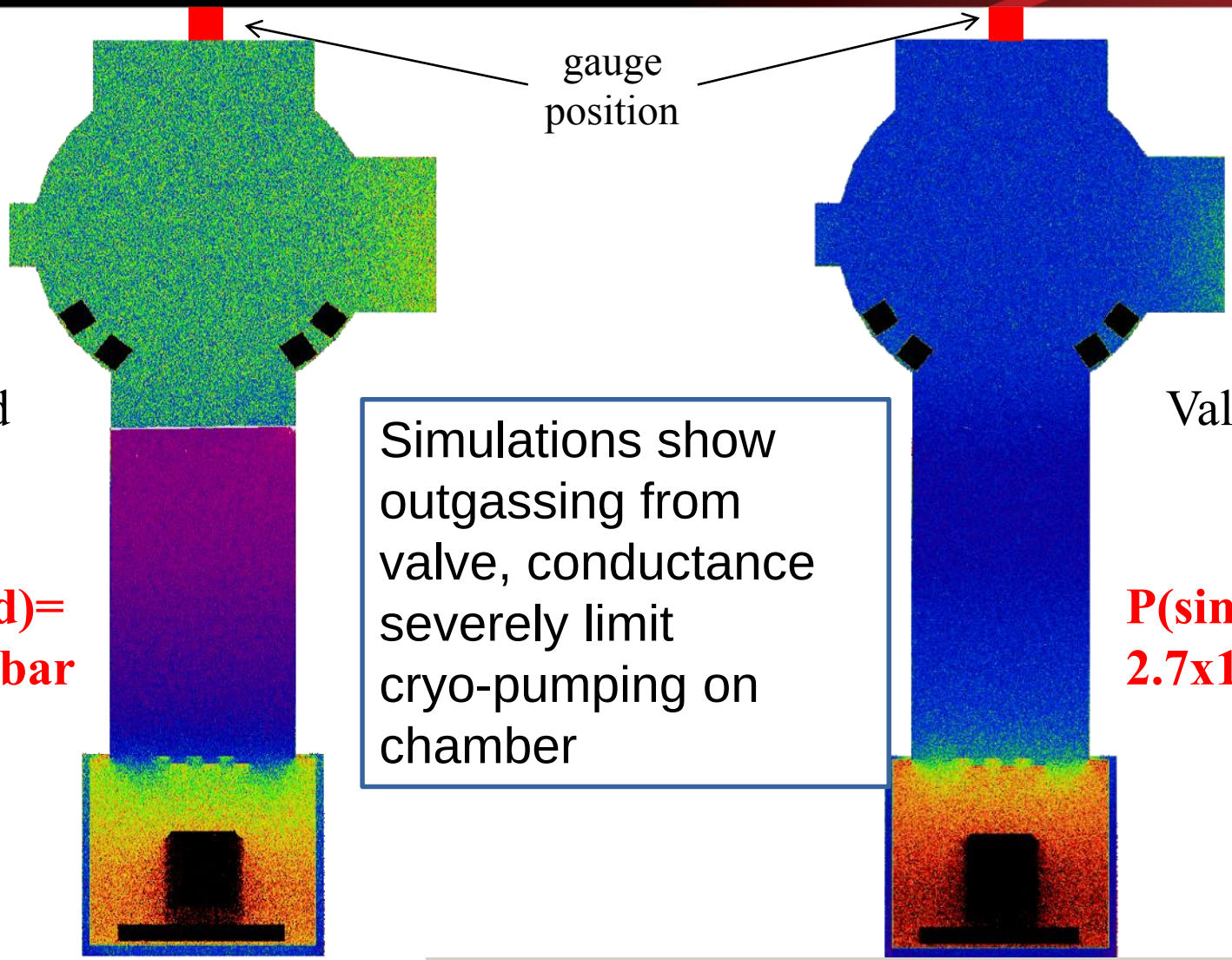

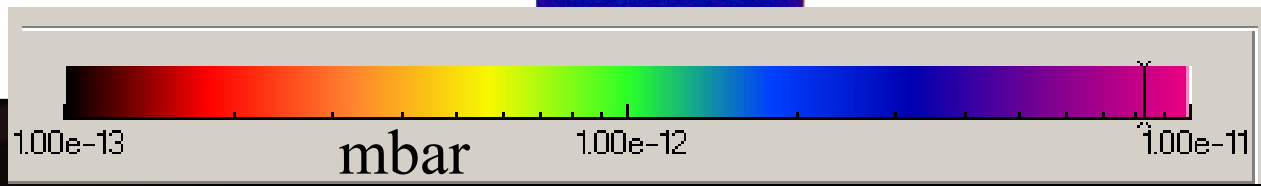

Measured Performance of Leybold cryopump

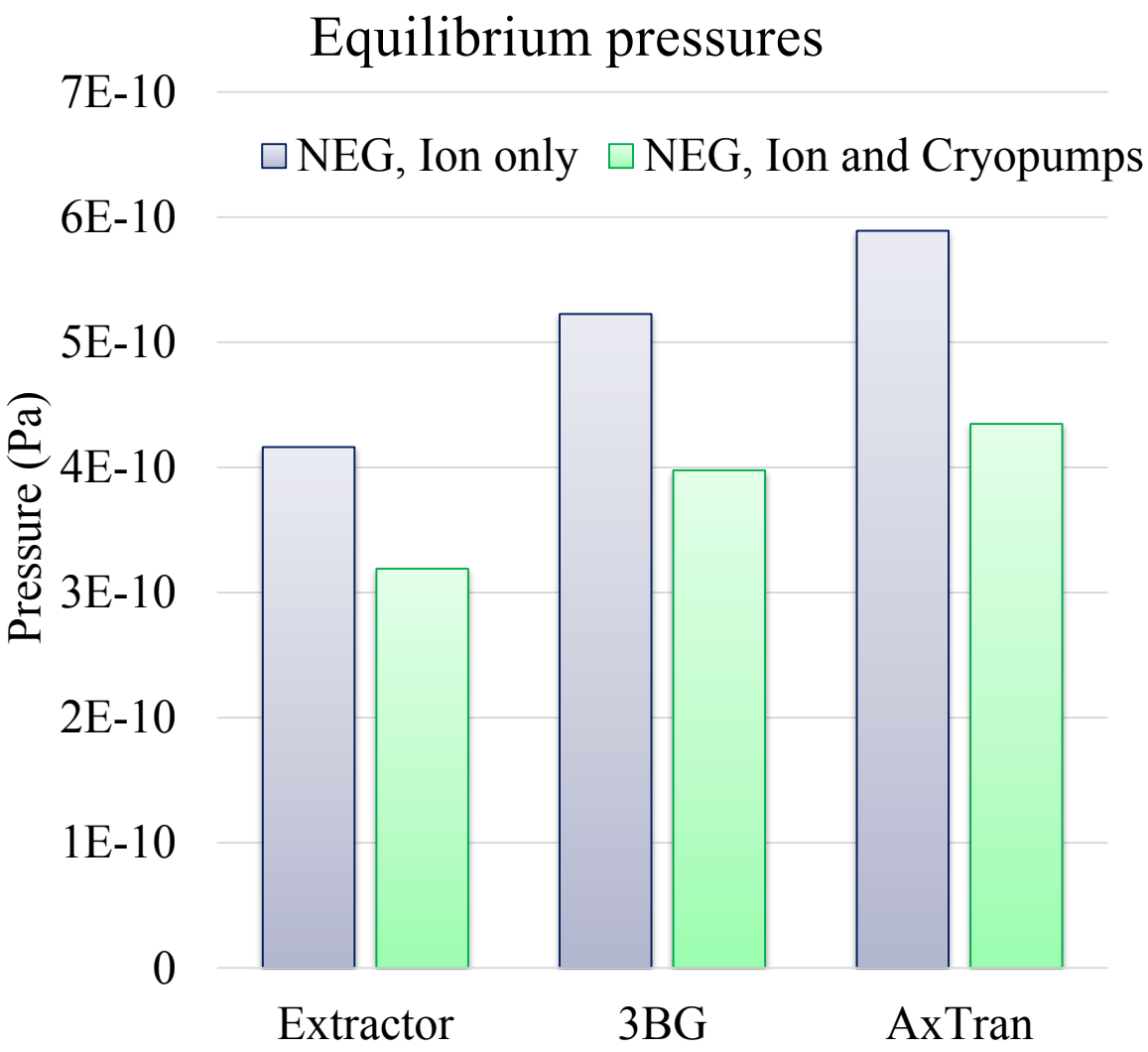

- Pressure with CP valve open = ~4×10^{-10} Pa
- Simulation: 3×10^{-10} Pa

Preliminary studies using Molflow+ simulations

- Useful tool
- Emphasize conductance limitations

Conclusions

- Measured pressure in operational CEBAF photogun: 1.3×10^{-10} Pa (extractor gauge, backgrounds subtracted)
- Test chamber pressure measurements with three XHV gauges in reasonable agreement after background corrections
- Vacuum improvements in design include
  - Reduced outgassing (heat treatment, eliminate thick flanges)
  - NEG coating
  - Improved pumping configuration (NEG module orientation, high conductance configuration, XHV-style ion pump)
- Modeling emphasizes conductance effects with appended cryopump
- Future higher voltage, higher current systems balance high voltage performance and requirements with vacuum conductance

First Design Consideration: High Voltage

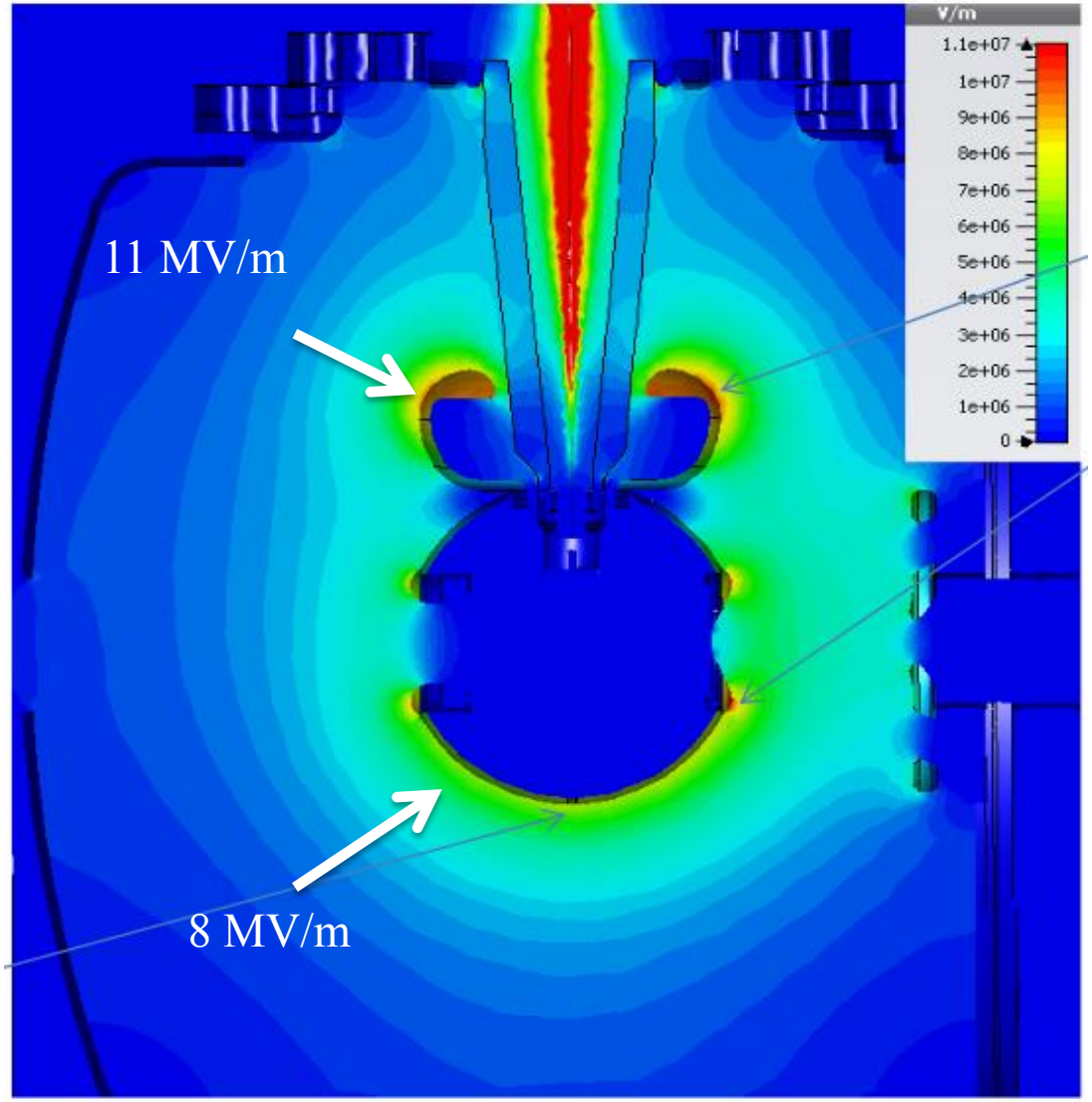

- 350 kV benefits
  - Eliminate capture
  - Smaller volume for highest ionization cross section
  - Higher bunch charge
- High voltage modeling determines geometry
  - Cathode shape
  - Cathode diameter determines wall distance