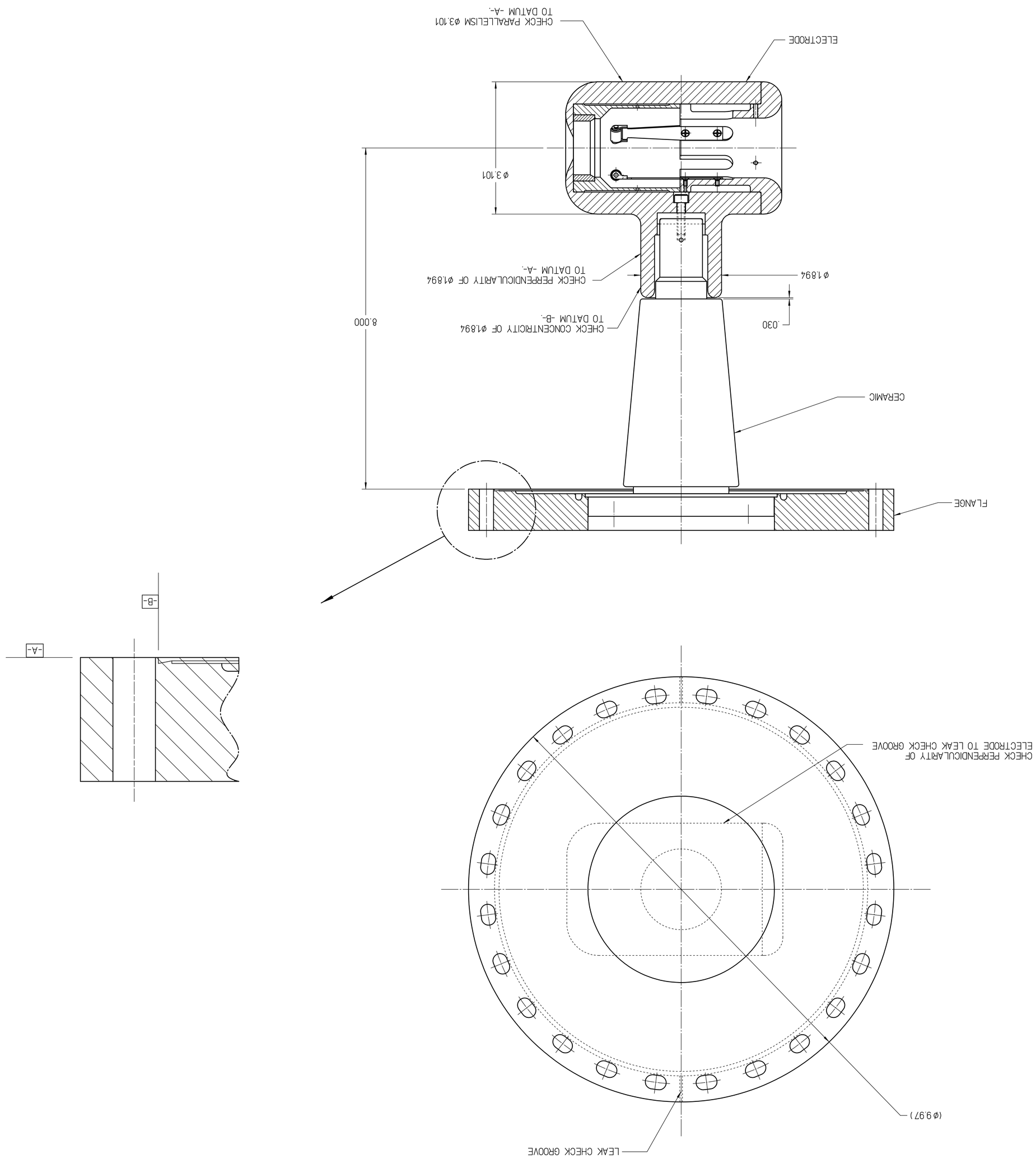
CHECK PARALLELISM Ø3.101
TO DATUM -A-
ELECTRODE
Ø3.101
CHECK PERPENDICULARITY OF Ø1.894
TO DATUM -A-
Ø1.894
8.000
CHECK CONCENTRICITY OF Ø1.894
TO DATUM -B-
.030
CERAMIC
FLANGE
-B-
-A-
CHECK PERPENDICULARITY OF
ELECTRODE TO LEAK CHECK GROOVE
(Ø9.97)
LEAK CHECK GROOVE