1. Introduction

The Gun Test Stand (GTS) in the LERF building at Jefferson Lab contains two ~~a~~ Class 4 lasers[1], one of which ~~that~~ drives a class 3B laser that drives the photocathode gun~~s~~ to be tested in the GTS vault (see figure 5.1). Laser hazards are present in the GTS during operation and alignment of the GTS drive laser beam. These hazards are mitigated by a controls system, the Laser Personnel Safety System (LPSS, described later) that prevents exposure of personnel to laser light when the room is not secured. This Laser Operational Safety Procedure (LOSP) gives a description of the laser used, the hazards present, a description of the laser enclosure and the procedures for safe operation.

2. Personnel

Personnel working with the drive laser in the GTS must have completed the EH&S Orientation to Jefferson Lab (SAF100), General Employee Radiation Training (GERT, which is SAF800) or Radiological Worker Training I (SAF801F), and Oxygen Deficiency Hazards Training (ODH, which is SAF103). They must also satisfy the following requirements before working in the GTS:

1) Be qualified for laser use by the Jefferson Lab Occupational Health Physician as detailed in section 6410 of the Jefferson Lab EH&S manual. This qualification need not be repeated on a regular basis but must be done once during the user or employee's time at Jefferson Lab and must be completed before the users operate any class 3B or class 4 lasers (MED02).
2) Read over the laser safety section of the Jefferson Lab EH&S manual. The web link for this is: http://www.jlab.org/ehs/ehsmanual/6410.htm
3) Take a laser safety course administered by the Jefferson Lab Laser Safety Officer (LSO) (SAF114O).
4) Read this document.
5) Have a safety walk-through of the GTS carried out by the laser system supervisor (LSS) for the LERF(now Steve Benson, the course is SAF115GTS).

A list of qualified laser personnel is available on the operations server at:

http://felweb.acc.jlab.org/internal/FEL/users/ to be updated

---

[1]See ANSI Z136.1-2007, Section 3.3, or section 6410 of the CEBAF EH&S manual for classification of laser hazards.

Only personnel qualified for the GTS may put the GTS into LASER PERMIT or be in the GTS when it is in LASER PERMIT. The Jefferson Lab Laser Safety Officer (LSO) for the lab may grant exceptions to this rule in special circumstances. Other Jefferson Lab personnel or outside visitors may enter the GTS only when it is not armed (no warning indicator lights should be illuminated outside the room and the doors must be kept open when occupied). Visitors to the GTS facility must be accompanied at all times by someone with ODH and GERT or better training.

3. Lasers in the Gun Test Stand

The drive laser for the Gun Test Stand consists of a low repetition rate regenerative Nd:YLF amplifier driven by a high repetition rate mode-locked YLF oscillator. A description of each laser follows,

Laser #1

Type of laser	Mode-locked Nd:YLF
Manufacturer	Coherent, Inc. 5100 Patrick Henry Drive Santa Clara, CA 95054 (800)367-7890
Model	Antares 76-YLF
Serial numbers	93280669, 93290077
Wavelength 1	1.054 μm
Power	20 W
Pulse width	60 psec FWHM
Pulse rate	74.85 MHz
Beam diameter	0.5 mm
Beam divergence	3 mrad
NHZ for eyes (m)	714
NHZ for skin (m)	51

Laser #2

Type of laser	Nd:YLF regenerative amplifier
Manufacturer	Continuum 3150 Central Expressway Santa Clara, CA 95051 USA www.ceoi.com
Model	Minilite I
Serial number	4920
Wavelength 1	1.054 μm
Pulse energy at wavelength 1	1 mJ
Wavelength 2	0.527 μm
Pulse energy at wavelength 2	0.5 mJ
Pulse rate	15 Hz
Beam diameter ($1/e^2$)	3 mm
Beam divergence ($1/e^2$),	<3 mrad
NHZ for eyes (m)	653 (0.527 μm), 277 (1.054 μm)
NHZ for skin (m)	NA

Laser #3

Manufacturer	Coherent 5100 Patrick Henry Ave Santa Clara, CA 95054 (800) 367-7890
Model	Verdi 10W
Serial numbers	CV074400004
Wavelength	0.532 mm
Power	10 W
Pulse rate	CW
Beam diameter ($1/e^2$)	2.25 mm ±10%
Beam divergence	0.5 mrad

Notes: The Drive laser oscillator is mode-locked at 74.85 MHz and emits 60 psec. pulses with up to 270 nJ of energy at 1.054 μm. Since the pulses occur at such a high frequency, the light output is continuous as far as eye safety is concerned (see appendix A.1). Though the output from the Antares is capable of being frequency doubled, it will not be in this facility. Instead the light from the oscillator is selected at a 15 Hz rate and amplified in a multi-pass amplifier (called Regenerative amplifier) up to the mJ level. It is then switched out of the amplifier and doubled in a crystal. The laser oscillator and amplifier are both contained in a hutch that results in a class 1 enclosure unless the hutch interlocks are bypassed. The lasers have all safety features necessary under CDRH guidelines[2]. See the attachments to this document for a description of safety features and safety labels.

The only other lasers used in the lab are Class 2 or 3R Diode Pumped Solid State (DPSS) lasers operating at 532 nm. They are used for alignment and quantum efficiency measurements.

[2] See ANSI Z136.1-2007 Section 4.3 for description of necessary engineering controls on Class 3B and 4 lasers.

4. Hazards

Either Verdi or the GTS drive laser oscillator (Antares 76-YLF) can produce a hazardous diffuse reflected beam in addition to the more obvious hazards from the direct or specularly reflected beam. They also poses a severe skin hazard for direct exposure. Cloth or paper can ignite quickly when exposed to the laser beam presenting a clear fire hazard. The most dangerous time with the Antares is when the Antares laser is being aligned into the amplifier. This high power IR beam can cause serious deep tissue burns. Great care must be exercised when working with the infrared high-power beam. Since it cannot be seen, it is imperative that laser safety eyewear be worn at all times when working with this laser. The amplified pulse has much lower repetition rate and therefore much lower average power. The high pulse energy presents a severe ocular hazard however, both in the near IR and in the visible. The best way to ensure that no harm comes to the user's eyes is to wear appropriate safety laser safety eyewear at all times when working with the lasers. Appropriate laser safety eyewear is available in the GTS control room. Note that the laser is remote controlled so turning off the laser does not ensure safety. The key must be removed, or the LPSS must be brought out of LASER PERMIT before one may remove his or her laser safety eyewear. The best way to reduce the burn hazard is to align with the lowest power usable, using fluorescent cards to locate the beam. When working with high power beams, it is necessary to know where the laser beam travels at all times, carefully avoid touching and terminate it into a beam dump.

Nominal Hazard Zones

To illustrate the laser hazard more fully it is useful to calculate the nominal hazard zone (NHZ) for the laser, both for a specular reflection and for a diffuse reflection. This is done for both eye and skin exposure. For a specular reflection the nominal hazard zone radius is given by

$$R(m) = \frac{1}{100\Phi}\sqrt{\frac{1.27P}{MPE}}$$

where Φ is the full angle divergence of the laser beam, P is the laser power in Watts, and MPE is the maximum permissible exposure in W/cm2. For a diffuse reflection with an albedo ρ and scatter at an angle θ, the nominal hazard zone radius is given by:

$$R(m) = \frac{1}{100}\sqrt{\frac{P\rho\cos\theta}{\pi MPE}}$$

In the table below we show the NHZ radii for specular and diffuse reflections for both lasers in the GTS. For the diffuse reflection we assumed a worst-case albedo of unity and a worst-case angle of 0°.

The NHZ for this laser is 714 meters for the optical hazard zone (see Table 4.1). Even the diffuse scattered nominal hazard zone is over 36 cm for the optical hazard so a near miss is as good as a hit for this laser. The NHZ

for this laser is 2020 meters for Verdi for the optical hazard zone and the diffuse scattered nominal hazard zone is over 50 cm. This is why laser safety eyewear is mandatory.

Dermal protection must also be considered. When feasible, beam covers should be used to prevent accidental exposure to the high power beam. Alignment of Antares laser to the amplifier must be done at low power and the power must be brought up slowly. Variable attenuators shall be used when aligning Verdi to reduce the power. Lab coats may be used to reduce the possibility of skin damage from accidental strikes as well (if skin damage occurs make sure Occupational medicine is notified).

Table 4.1, Specular and diffuse reflection nominal hazard zones for the drive laser. All distances are in meters.

	Specular Reflection NHZ Radii		**Diffuse Reflection NHZ Radii**	
Laser	Ocular (m)	Dermal (m)	Ocular (m)	Dermal (m)
Antares laser Oscillator	714	51	0.36	0.025
Regen Amp(1 μm)	277	0.3	0.42	NA
Regen Amp(0.5 μm)	653	0.3	0.65	NA
Verdi V10 (0.532 μm)	2020	226	0.50	0.056

Appropriate Optical Density and Required Use of Laser Safety Eyewear

Engineered controls are used where possible to eliminate the laser hazard. This cannot be done at all times for all laser systems. ***In the case that direct access to the laser beam is required, the best way to ensure that no harm comes to the user's eyes is to wear appropriate safety laser safety eyewear at all times when working with a laser and to be aware of where the high power beams are. Laser eyewear use is mandatory in the LERF when a Class 3B or 4 hazard is present.***

The calculations for the required laser safety eyewear attenuations are in Appendix A.1. A summary of the eyewear approved for use with the two lasers is listed in Table 4.2. Laser safety eyewear with an optical density (O.D.) of 5 at both 1054 nm and 527 nm and for both pico-second and nanosecond pulses.

Table 4.2 Required Optical density for laser safety eyewear for the oscillator, the regenerative amplifier, the regenerative amplifier operated in oscillator mode and Verdi V10.

Laser@wavelength	Power/energy output	Optical density
Nd:YLF @1054 nm	20 W	5
Nd:YLF @1054 nm, 60 psec pulses	1 mJ	5
Nd:YLF @527 nm, 45 psec pulses	0.5 mJ	5
Verdi V10 CW@532nm,	10W	5

Pay careful attention to the laser safety eyewear selection. The appropriate laser safety eyewear should have both green and orange colored tape. It is a very good idea to also read the label on the laser safety eyewear to make sure that they match the required attenuation for the laser being used. The attenuation must be 5 or greater at both 1054 and 527/532 nm.

Non-beam hazards

The non-beam hazards due to the laser, in order of their likelihood, are falls, high voltage, fire, toxic gas release, burns, steam explosions, and ionizing radiation.

The drive laser is mounted on an optical table suspended from the ceiling. The alignment work has to be done on raised platforms. Care must be taken while working to prevent falls from the platform.

Under normal operation there are no exposed hazardous electrical conductors in the lasers. It is important to follow the safety instructions of the manuals. Only qualified electrical workers shall do work on electronic parts of the laser, using written procedures. Interlocks on the Antares power supply doors and covers shall not be defeated by Jefferson Lab personnel. Lethal voltages and currents are exposed in the Antares laser power supply when the door is open. The power supply doors shall remain closed whenever the laser power supply is plugged in unless being worked on by qualified personnel, or during a test or maintenance of the interlock. Work on electrical systems is limited to electrical Class 1 and Class 2 criteria. During maintenance of the interlock, the power supply shall be shut off. There are no serviceable parts inside Verdi, so the over of the laser and power supply shall not be opened at anytime.

It is important to keep any flammable materials away from the beam at all times. The laser user should be aware at all times of the location and function of the fire extinguishers in the GTS. There is a smoke detector in the laser hutch. When this smoke detector alarms it shuts off the power to the GTS laser(s). The smoke detector system must be checked at 6 month intervals or whenever the LPSS is modified.

If the laser heats or burns some materials (e.g. Plexiglas) toxic gasses could be released. The laser user may best prevent this by being careful about what materials the laser encounters.

There are hot components in the laser head, even after the laser is turned off. Caution should be exercised when working around the doubling crystal, the acousto-optic modulator in the Nd:YLF oscillator, or with the laser head itself (which is normally well-cooled by the water system). There are several laser beam dumps as well, which can get very hot if they are operated without water-cooling (some are air-cooled).

There is a very small risk of the laser head having a steam explosion if there is an interruption in the water coolant. There are interlocks to keep this from happening. They should be checked every six months to make sure they are operational. Since the user must always wear laser safety eyewear or glasses when working on the laser with the cover removed, the user's eyes should be protected from the steam explosion if the cover is removed, but the user could suffer other injuries.

The only non-laser hazards in the GTS when it is not in RUN MODE are electrical. Hazardous voltages are present inside some of the electronic components in the GTS. Qualified personnel only are allowed to do work on these components. Lock tag and try may be accomplished for the laser power supply by unplugging the power supply. The cord is in sight of the power supply.

When the GTS is in run mode there are hazardous ionizing radiation levels due to the presence of high voltage electrodes inside the gun vacuum chamber. The drive laser generates non-ionizing radiation i.e. laser light. The GTS enclosure in combination with the PSS is designed to protect users from these hazards by implementing engineered and administrative controls described in the GTS OSP. It is essential that sweep procedures be carefully followed and that the PSS be certified at 6 months intervals.

5. The laser environment

The laser is used to extract electrons from a semiconductor crystal inside the electron gun, which is located in the GTS vault a couple meters from the laser. The electrons are then sent into a diagnostic beamline. The laser light is transported from drive laser to the gun via an enclosed beamline (see figures 5.1-3). Before working on this beamline the drive laser oscillator must be unplugged. The work is done next to the plug so there is no need for LTT.

The GTS is a controlled area during LASER PERMIT operations and the laser is interlocked to the room safety system. A key on the laser power supply can also be used to positively shut down the laser. During LASER PERMIT operations only authorized users will be allowed in the room. The lasers are mounted on an optical bench suspended from the ceiling. The beam is transported through a transport pipe along the ceiling to the GTS gun. The final diagnostics and matching optics are in a plane on the table at a height of 55 inches off the floor.

The GTS has only one entry and exit point under normal conditions. There is a roll-up door that may be opened when major repairs are in progress. No operation is possible when the roll-up door is open. The integrity of the lab must be maintained. The entry sliding metal door is interlocked so that, if the hutch is open, the laser will be shut off if the sliding metal door is opened. While alignment work is ongoing the sliding steel door must remained closed at all times. If entry or exit is desired while the laser is operating the user must close up the hutch before opening the door. Once the door is opened the lab must be re-swept (after closing the door) before the hutch can be re-opened.

The lighting in the GTS shall be typical of office lighting during typical alignment and setup activities. For hazard calculations however it is assumed that the pupil size is 7 mm (fully dilated).

The fire protection system is a layered system that includes:

1. **Detection systems** such as local smoke detectors in the laser personnel safety system (LPSS), building smoke alarms connected to the building fire alarm panel, and manual pull boxes.

2. **Suppression systems** consisting of wet pipe sprinklers throughout the upper level of the LERF and portable fire extinguishers.

The LPSS smoke detector not only provides a machine protection function (personnel are unlikely to be present when they detect smoke) it also reduces the likelihood of fire spreading due to the drive laser and are thus a good idea from a fire safety standpoint as well. The LPSS smoke detectors are connected to the building Fire Alarm Control Panel (FACP) located in the LERF lobby and are programmed to activate a trouble signal if they detect smoke. The smoke detector that has been activated by smoke will display a slow flashing red LED on the plastic

cover of the detector. The user must find the cause of the smoke production and eliminate it before resuming laser operations.

The building smoke detectors activate an alarm signal in the FACP that will sound the building audible alarms when smoke in the area exceeds the trip level of the building smoke detectors. These are connected to the FACP in the LERF lobby and are monitored by the MCC and Security Guard Post 2 at the main gate. All personnel in the entire LERF building must exit the building and meet at the muster point located outside the main entrance of the LERF building. The smoke alarms do not alter the state of the LERF or accelerator.

Manual Pull boxes are present near the building exits and should be used when smoke or a fire is observed but the alarm has not yet activated. Operating a manual pull box is the fastest and best way to evacuate the building and notify emergency responders. Using the Manual Pull Boxes activates on an alarm connected to the MCC and Security Post 2 and does not de-energize the LERF.

A portable fire extinguisher is present in the GTS. It is class C and can be used to extinguish small fires.

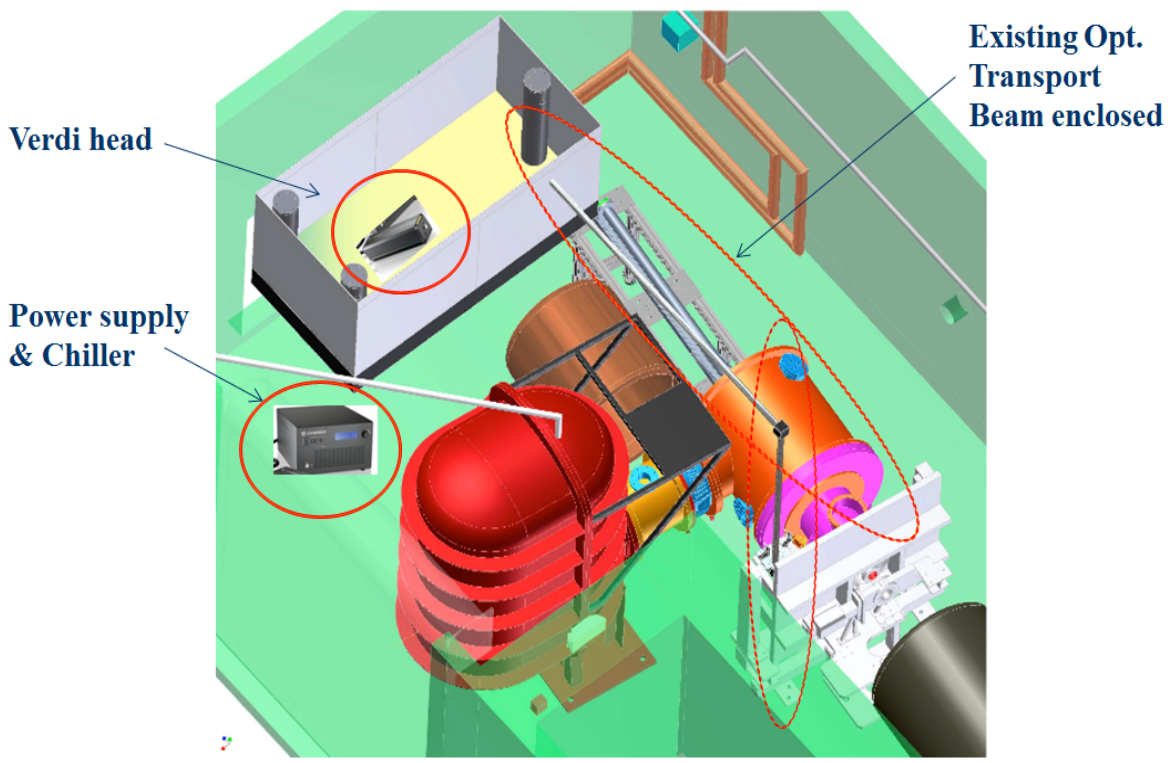

Figure 5.1 View of the Drive laser table and optical transport to the gun in the Gun Test Stand. The table is mounted on the ceiling of the vault and the beamline is very close to the ceiling as well. The power supplies for the lasers are on the floor under the table. The key for enabling LASER PERMIT is next to the table.

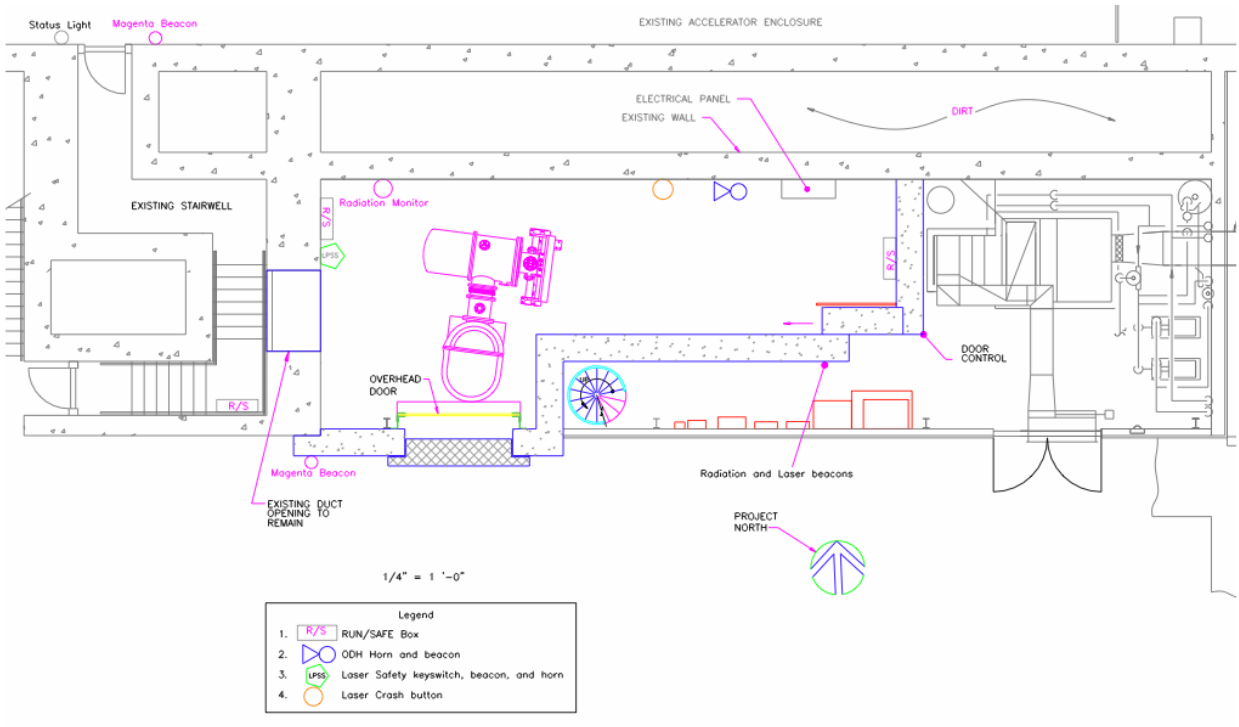

Figure 5.2 Plan view of the GTS. The crash buttons are on the run/safe boxes. The laser key position is also shown.

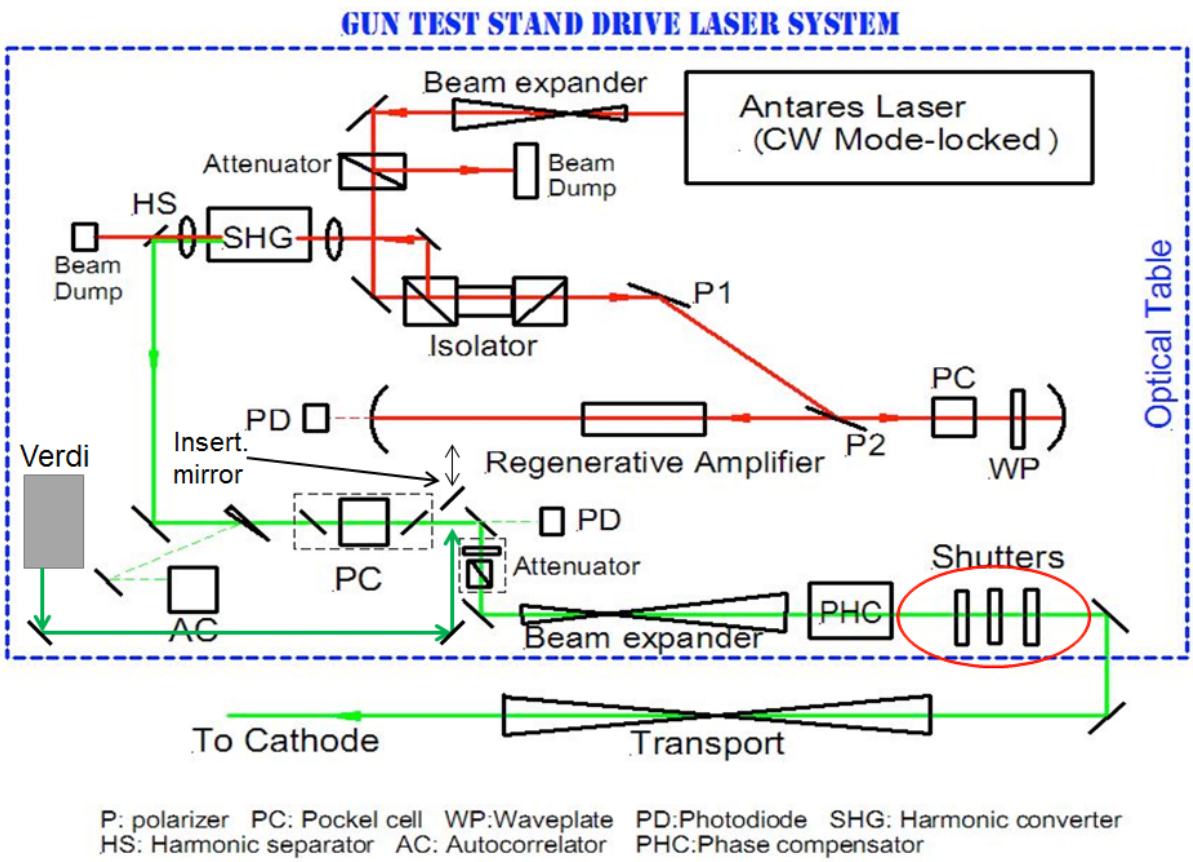

Figure 5.3. Detailed layout of the Gun test stand laser system mounted on the optical bench in the GTS. The ~~oscillator~~ Antares laser beam is matched and attenuated on the way to the amplifier. It is then isolated from the amplifier with a Faraday rotator. It is switched into the regenerative amplifier and amplified up to about 1 mJ before being extracted. The beam is then frequency doubled, matched to the optical transport, and sent through a laser beam phase compensation system. A Pockel Cell is used to make sure there are no ghost pulses. The beam then goes through an aperture, which is imaged to the cathode by the optical transport system. There are three safety shutters, one for the Machine Protection System and two for the Personnel Protection System. Diagnostics (photodiodes and an autocorrelator) monitor the beam timing at different time scales. The Verdi is needed for operation, its laser beam is routed into the optical transport by a insertable mirror. Under such configuration, both lasers are operable, but only one at a time. The insertable mirror is inserted first before the internal shutter of the Verdi can be opened to send the beam to the gun.

6. Procedures

Maintenance and Certification

Only approved Jefferson Lab personnel may work on the PSS or LPSS (including wiring to the interlocks). The LPSS system owner (Henry Robertson) grants approval on the basis of appropriate training. After work is completed, checks of the functionality must be completed before the drive laser is run. If work is done on the PSS/LPSS, the system must be re-certified. Modification of the LPSS by unauthorized personnel is cause for disciplinary action. The PSS/LPSS must be certified every 6 months even if no work has been done on it. In addition, the safety eyewear should be checked for any damage that would compromise their integrity.

Every month all fire extinguishers must be checked for proper pressure, intact pin and seal, and overall condition and documented by dating and initialing the card attached to the extinguisher.

Off-Normal Procedures

In the event of fire in the GTS, a fire extinguisher in the room may be used if the person is properly trained and so chooses, and his or her escape route is clear. If the fire cannot be extinguished in this manner, the user should leave the room, pull the fire alarm box to the left of the exit doors and exit the building. If the fire alarm sounds due to a fire outside of the GTS, all personnel must immediately evacuate the building and go around the building to the muster point outside the front door of the LERF building. The operator should then dial 911 and report the fire. Note that calling 911 from any land-line phone will initiate calls to Occupational medicine, the Guard shack, and other emergency personnel.

In the event of a building ODH alarm the operator must exit the GTS, exit the building, and go around the building to the muster point. The crew chief in the MCC must be contacted at x7045 or 9-269-7050 once the building is evacuated. Finally the ODH sensor in the GTS must be checked and re-calibrated if necessary. If the building ventilation system fails, the GTS vault becomes an ODH 2 area and the vault must be evacuated.

In the event of a of an injury caused by laser light, the following procedures must be followed:

Ocular Exposure During Normal Business Hours

1. The victim should be initially evaluated by JLab Occupational Medicine. If the situation seems critical, call 911. Occupational Medicine will be contacted automatically. The victim should remain still with both eyes closed while waiting for the ambulance and Occupational Medicine staff to arrive at the scene. If the situation is not critical, call Occupational Medicine only (269-7539) and let them know that the victim is

being transported to Occupational Medicine. Do not allow the victim to drive.

2. Occupational Medicine will administer first aid. This typically entails taping ocular protective cups over both eyes and then transporting the victim to a hospital emergency department or ophthalmologist, depending on the severity of the injury.
3. Occupational Medicine will also ensure that the victim is subsequently examined by an ophthalmologist.
4. After the victim recovers from the acute injury, Occupational Medicine will provide her/him with a letter explaining the injury.
5. The LSO and LSS must be contacted as soon as reasonable and an investigation shall be started to study the causes of the accident and future precautions necessary to prevent any new accidents.

Ocular Exposure After Normal Business Hours: Same as above except that Occupational Medicine will not be involved initially. All victims should be transported to a hospital emergency department. Transport can be via ambulance or coworker, depending on the apparent severity of the injury. Occupational Medicine should be informed on the next business day.

Skin Exposure During Normal Business Hours

1. The victim should be initially evaluated by JLab Occupational Medicine. If the situation seems critical, call 911. If bleeding is present, it should be controlled using direct pressure from a gloved hand over gauze. If the situation is not critical, call Occupational Medicine only (269-7539 or page 584-7539) and let them know that the victim is en route to Occupational Medicine.
2. Occupational Medicine will administer first aid. This typically entails controlling bleeding and applying a dressing.
3. After initial evaluation by Occupational Medicine and/or the emergency department, Occupational Medicine will ensure appropriate follow-up.
4. The LSO and LSS must be contacted as soon as reasonable and an investigation shall be started to study the causes of the accident and future precautions necessary to prevent any new accidents.

Skin Exposure After Normal Business Hours: Same as above except that Occupational Medicine will not be involved initially. If the situation warrants (e.g. if the skin burn is more than a blister), the victim should be initially evaluated at a hospital emergency department. Occupational Medicine should be informed on the next business day.

Normal operating procedures:

The amplifier alignment procedure is done rarely and must be carried out by a laser expert (an approved scientist or technician from the Accelerator Division). All phases of the Alignment procedures begin with a rough alignment of the Antares laser to the amplifier at reduced power (<0.5W if possible). The operator must follow the procedure in the manual for optimizing the Antares laser ~~oscillator~~. Alignment should occur at full lighting levels in the GTS. General rules for alignment are as follows:

Before Alignment starts:

1. To reduce accidental reflections, remove watches, rings, dangling badges, necklaces, and reflective jewelry before any alignment activities begin. Use non-reflective tools if possible.
2. Limit access to the room/area to authorized personnel only. No multi-tasking!
3. Consider the need for additional personnel during alignment. It may go much smoother with two people.
4. Gather all equipment and materials needed prior to beginning the alignment.
5. Remove all unnecessary equipment, tools, combustible material (if fire is a possibility) from the table to minimize the possibility of stray reflections and non-beam accidents.

Rules during alignment

1. Co-axial low power lasers should be used when practical for alignment of the primary beam.
2. Laser Protective Eyewear shall be worn at all times during the alignment. Business cards are useful for aligning the green beam since they fluoresce strongly when exposed to the green light.
3. There shall be no intentional intrabeam viewing with the eye. If intrabeam viewing is required, use an imaging device such as a camera, imaging plate, or cell phone.
4. Reduce the beam power through the use of ND filters, beam splitters and dumps, or reducing power at the power supply. Avoid the use of high-power settings during alignment as much as is practical.
5. Keep the laser beam under control. Close the shutter when moving optics, keep mounts secured to the table. This takes a bit longer but pays off in results and safety.
6. Areas where the beam leaves the horizontal plane shall be labeled.
7. Terminate stray or unused beams.
8. View invisible beams with an IR viewer.
9. Remember to replace temporary beamline covers, beam blocks and barriers after alignment.

Normal operation of the lasers should go according to the following procedure:

1. An approved laser user gets the laser permit key from PSS chassis in the GTS control room.
2. Personnel doing the work get laser protective eyewear before entering the GTS vault.
3. Authorized personnel then enter the GTS and inspect the work area, making sure it is safe for alignment. All personnel not participating in the work must leave the vault.
4. The laser user must then close the sliding metal door.
5. Once the sliding metal door is secured the users in the vault must carefully search the vault for any personnel, presumed to be unconscious or non-responsive. If anyone is found they must leave the vault.
6. All personnel in the room must don laser protective eyewear.
7. Once it has been determined that the only personnel in the room are approved laser users wearing laser protective eyewear, one of the users must insert and turn the laser permit key next to the drive laser table.
8. If the laser is not already on, the laser users may then turn it on. Typically the laser will already be on inside of the hutch. If this is the case, the users may open the hutch to do the alignment.
9. If someone has to enter or leave the GTS vault, the hutch must be closed up, the laser permit key must be switch to the safe position, the sliding metal door must be opened and securely closed and the vault must be swept before resetting the laser permit key.
10. When the alignment work is done the hutch must be securely closed, the laser permit key must be turned and removed, and the sliding metal door must be opened.
11. Laser operations end. The laser may be shut off or it may be left on for beam operations.
12. The laser user must return the laser permit key to the PSS chassis in the GTS control room.
13. Laser eyewear is removed and stored for next operation of the laser.

Most maintenance on the laser itself will consist of occasional minor realignment of the Antares and the launch into the amplifier, or yearly optics cleaning. These procedures are described in the operators manuals. Maintenance requiring replacement of parts should be carried out by qualified personnel following written procedures.

7. Laser controls:

The lasers are equipped with all safety features recommended by the CDRH. These safety features are described in the operators' manual. Copies of these sections are attached to this LOSP. In addition, the room has an interlocked door that forbids access to untrained personnel. The personnel safety system (PSS) is interlocked to two shutters in the GTS. These shutters only open when the GTS vault is either in a LASER PERMIT state or a run state. The key used to put the vault in LASER PERMIT is the same one used to put the vault into a RUN state and cannot be used to do both at the same time. One state of operation or the other is possible.

Administrative safety procedures and training are also used to enhance safety. All laser users must be trained in laser safety. They must be familiar with this document and this document must be posted outside the GTS vault. The laser users are responsible for not allowing non-approved personnel in the GTS. They are also responsible for wearing eye protection when a class 4 laser hazard exists. Finally, laser users shall be responsible for their own safety. They must be familiar with all warning signs, lights, and audible warnings and must know the proper safety action to take in any normal situation.

Three crash buttons are provided in the GTS vault. Two are on the PSS Run/Safe boxes. The third is on the wall in the middle of the room. All are labeled. Any of them drop the lasers to a safe state. The crash buttons are latched so that the system stays in OPEN mode after the buttons are reset. The system must be reset using the LASER PERMIT key before the LPSS is reset and the laser can be restarted.

If new lasers are introduced to the GTS or new procedures must be developed for new system configurations, this LOSP must be updated and re-approved. All personnel should then be reacquainted with the procedures.

Appendix A. Maximum Permissible Exposure (MPE) levels and Determination of Optical Densities of Laser Safety Eyewear

The Drive Laser Oscillator in the GTS can put out up to 20 W of near infrared light.

The MPE for the Nd:YLF laser light, assuming a continuous laser and assuming the aversion response time of 10 sec. is 5 mW/cm^2. If we multiply by the maximum aperture size of a 7 mm pupil size (0.385 cm^2) we get a power limit of 0.005*0.385=1.92 mW. The Antares has the capability of being frequency doubled. The aversion response time is now 0.25 seconds and the MPE is 2.56 mW/cm^2. When we use the worst case that the laser fills the maximum aperture we get an MPE power limit of 0.99 mW. This calculation will also applies to Verdi (10W) since its wavelength and power are very close the aforementioned parameters used for calculation.

For the Antares laser we must also calculate the exposure limit for the individual pulses since it is a repetitively pulsed laser. The MPE for an IR pulse with 60 psec. duration is $27t^{0.75}$ J/cm^2 times C_P where C_P is the minus fourth root of the number of pulses in the exposure time. For a 74.85 MHz laser, there are 748.5 million pulses in an exposure time. The MPE is therefore 3.52 nJ/cm^2. The irradiance limit is the repetition frequency times this value, or 263 mW/cm^2. This is greater than the CW value of 5 mW/cm^2 so the CW value must be used. As far as eye safety is concerned therefore, the laser is a continuous source.

When the pulses are amplified the repetition rate drops to 15 Hz or less. The MPE then rises to 0.166 μJ/cm^2 for the IR and 33.7 nJ/cm^2 for the green. For the worst case area this limits the pulse energy to 64 nJ in the NIR and 13.0 nJ in the green assuming a worst case area of 0.385 cm^2. The regenerative amplifier should be capable of outputting up to 1 mJ of pulse energy with the 60 psec pulse (16.7 megawatts peak power). When doubled the pulse should be about 45 psec and the pulse energy should be about 0.5 mJ.

In summary, we have the following maximum permissible power exposure limits for the lasers:

Laser and wavelength	Max. Power/energy exp.
Nd:YLF @1054 nm	1.92 mW
Nd:YLF @ 527 nm	0.99 mW
Regen Amp @1054 nm	64 nJ
Regen Amp @527 nm	13 nJ
Verdi V10 @532nm	0.99mW

These power levels assume that no viewing device is used to focus the beam into the eye and that no viewing of the beam is intended.

When the power levels quoted in the laser description are used we find that we need the following optical densities for the different wavelengths (densities are rounded up to the next higher integer):

Laser@wavelength	Power/energy output	Optical density
Nd:YLF @1054 nm	20 W	4
Nd:YLF @ 527 nm	8 W	4
Regen Amp. @1054 nm	1 mJ	5
Regen Amp @527 nm	0.5 mJ	5
Verdi V10 @532nm	10W	5

We have goggles with optical densities greater than 5 at both wavelengths..

The MPE for skin exposure in the NIR is 1 W/cm^2 for CW operation (visible 0.2 W/cm^2). The power density in the laser beam of the Nd:YLF laser is approximately 5000 W/cm^2 or about 5,000 times (in case of visible light from Verdi V10, 12500 W/cm^2 or about 12,500 times) the MPE for skin exposure. The MPE assumes a 10 second exposure. Clearly there is a severe skin exposure hazard for this beam. Beam enclosures should be used wherever reasonable and care must be taken to control stray reflections from optics. The pulsed MPE is 200 mJ/cm^2. The regenerative laser output is only class 3B and does not pose a skin hazard.

Attachment 1

The following pages are from the Operator manuals for the Antares laser and Verdi V10. They describe the safety features of the lasers. Included are:

Pages 1–6 of the Antares 76 Series Laser Operator's Manual, Nd:YLF Supplement

Pages 25–33 of the Antares 76 Series Laser Operator's Manual, Chapter One.

Pages 11–16 of the Verdi V10 Series Laser Operator's Manual, Chapter One.

Attachment 2

The following pages are from the Operator manuals for the Antares laser and Verdi V10. They describe the operation and alignment of the lasers. Included are:

Pages 7–36, 40–41 of the Antares 76 Series Laser Operator's Manual, Nd:YLF Supplement

Pages 65-82 of the Antares 76 Series Operator's Manual, Chapter Five.

Pages 113–119 of the Antares 76 Series Laser Operator's Manual, Chapter Eight.

Pages 31–46 of the Verdi V10 Series Laser Operator's Manual, Chapter Four.

Attachment 3

The following drawings show schematics of the part of the PSS that deals with laser safety. The drawings are:

05360-D-0001

05361-D-0001

05362-D-0001

05364-D-0001

05366-D-0001

05369W-D-0001

05377-D-0001