REVISION HISTORY				
ZONE	REV	DESCRIPTION	DATE	APPROVED

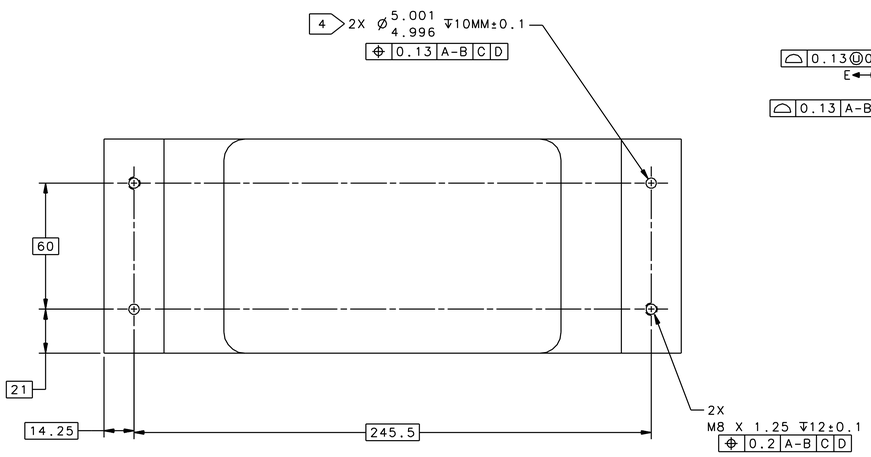

DETAIL B
HOLE LOCATIONS

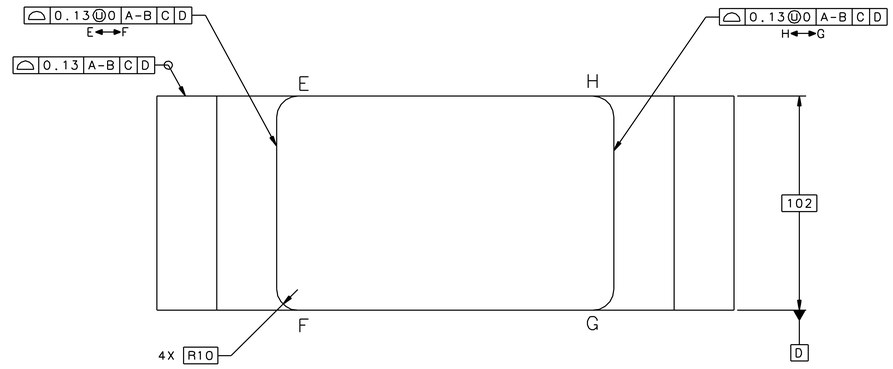

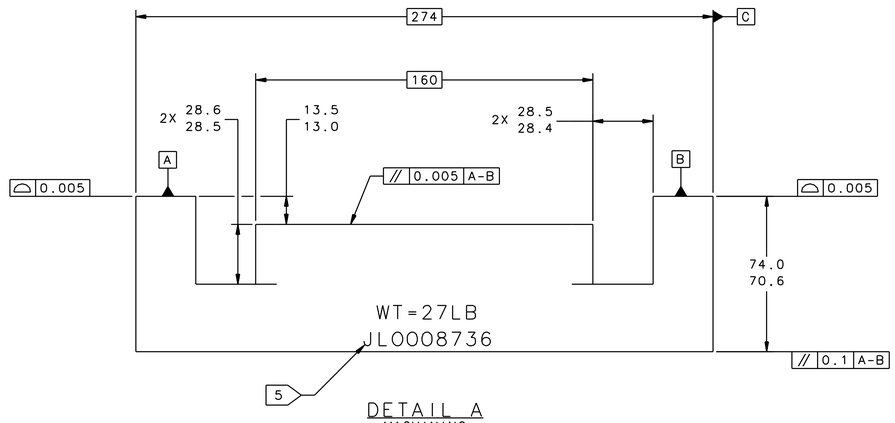

DETAIL A
MACHINING

PRELIMINARY
02-24-14 06:00
REV 03

NOTES:

1. ASME Y14.5-2009 IS USED FOR ALL DIMENSIONING AND TOLERANCING.
2. DO NOT USE MAGNETS FOR HANDLING OR MACHINING OPERATIONS.
3. APPROXIMATE WEIGHT OF CORE STEEL IS 27 LB.
4. FEATURE REQUIRES CLAMPING TO MATING PART, JL0008098, DL MAGNET CORE - TOP, PRIOR TO MACHINING.
5. USING .25IN HIGH CHARACTERS, ETCH WEIGHT AND PART NUMBER OF CORE HALF IN AREA AS INDICATED.
6. FINISH OUTER SURFACES WITH RUSTOLEUM #964402 SEMI-GLOSS SAFETY RED PAINT. FINISH POLE FACE SURFACES WITH GLOSS URETHANE VARNISH THINNER 1:1 WITH MINERAL SPIRITS, WIPED ON THEN WIPED OFF WITH A LINT FREE CLOTH.
7. APPLY LPS 3 RUST INHIBITOR TO ALL MAJOR MATING SURFACES PRIOR TO ASSEMBLY, PER MANUFACTURER'S INSTRUCTIONS.

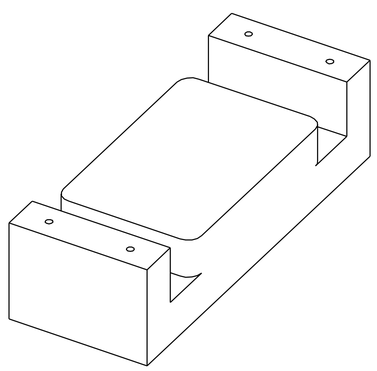

ISOMETRIC
(NOT TO SCALE)

QTY REQD	ITEM NO	PART OR IDENTIFYING NO	NOMENCLATURE OR DESCRIPTION	MATERIAL SPECIFICATION	NOTES

PARTS LIST

EACH SHEET OF MULTI-SHEET DRAWINGS SHALL ALWAYS HAVE THE SAME REVISION LEVEL.

DIM & TOL PER ASME Y14.5 UNLESS OTHERWISE SPECIFIED DIMENSIONS ARE IN MILLIMETERS TOLERANCES ARE: FRACTIONS ± N/A; DECIMAL X ± .01, XX ± .005, XXX ± .005; ANGLES ± 50'

THIRD ANGLE PROJECTION

MATERIAL: AISI 1006 STEEL

FINISH MACHINED SURFACES 3.2 UNLESS OTHERWISE NOTED
DEBURR & BREAK ALL SHARP EDGES

DO NOT SCALE DRAWING

TRACKING NO: N/A

APPROVALS	DATE
DRAWN S.A. GREGORY	12FEB14
CHECKED	
APPROVED	
APPROVED	

United States Department of Energy

Jefferson Lab
Thomas Jefferson National Accelerator Facility
Newport News Virginia

MAG
CORRECTOR
DL
DL MAGNET CORE - BOTTOM

SIZE E | DWG NO JL0008736 | REV –

SCALE 1:1 | USED ON ASSY NO JL0008102 | SHEET 1 OF 1