Compact Photon Source

Stage-2 modeling

B. Wojtsekhowski for the collaboration

from the November 2014 talk at the NPS meeting

γ-Source

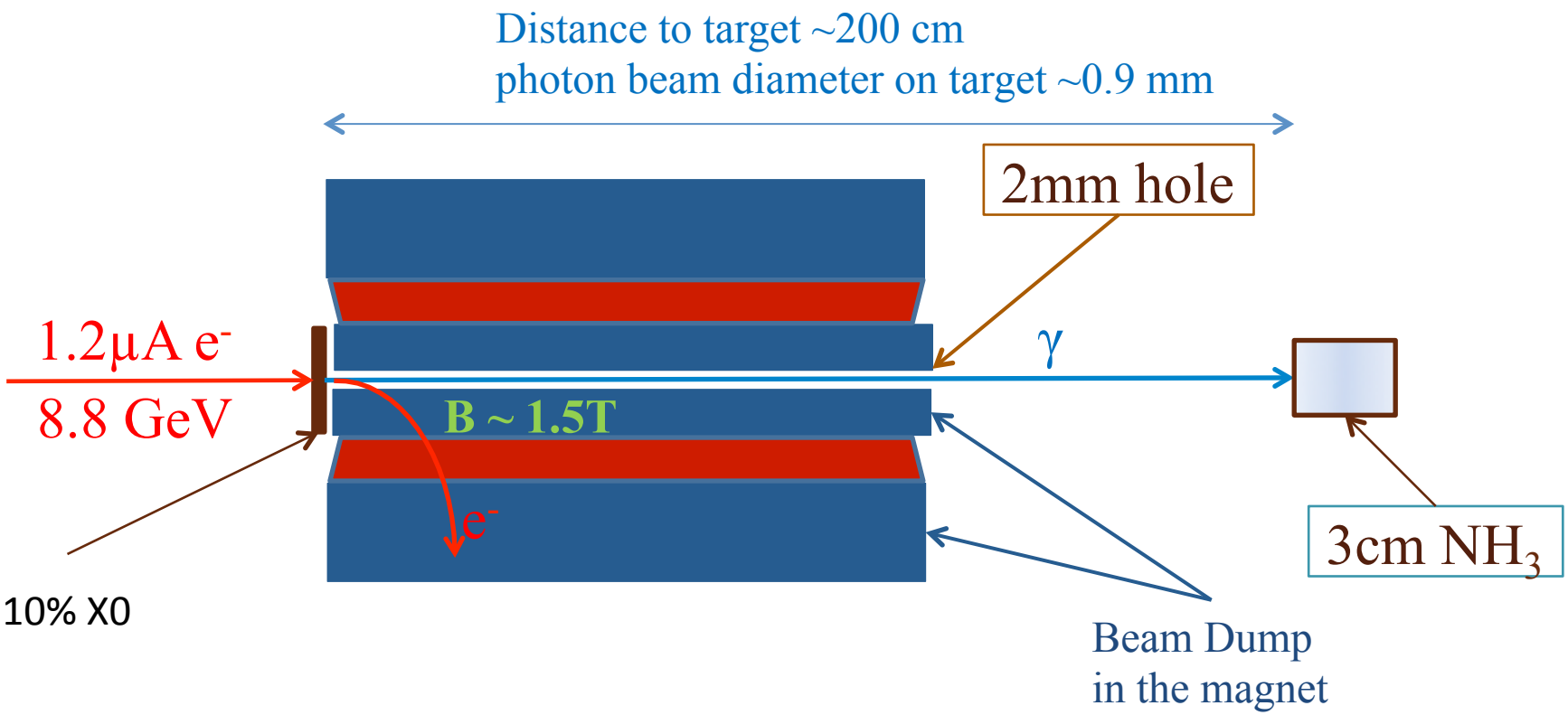

Initial MC simulation shows acceptable background rate on SBS and NPS
Detailed analyses of radiation level are in progress

from the tech note for the 2015 WACS proposal

Conceptual Design Report
A Compact Photon Source

B. Wojtsekhowski
Thomas Jefferson National Accelerator Facility, Newport News, VA 23606

G. Niculescu
James Madison University, Harrisonburg, VA 22807

June 22, 2015

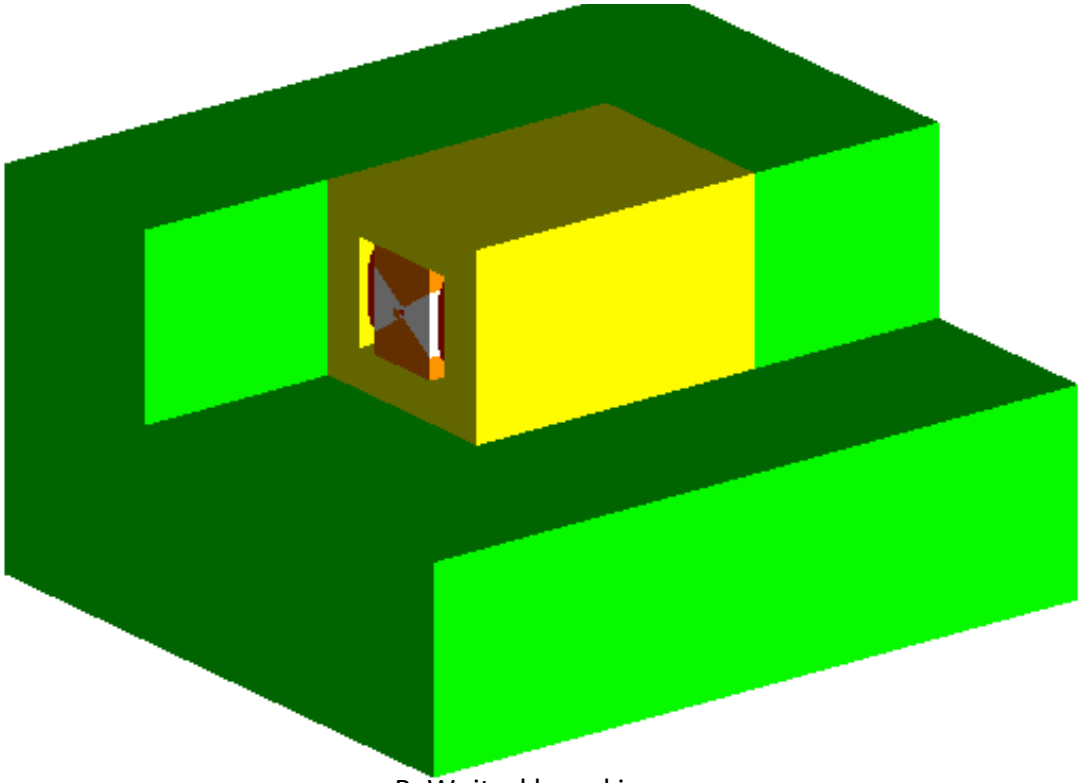

Current model of the γ-Source

Distance to target ~200 cm
photon beam diameter on target ~0.9 mm

2.7 μA e^-
11 GeV

3 mm x 3 mm hole
2 mm x 2 mm raster

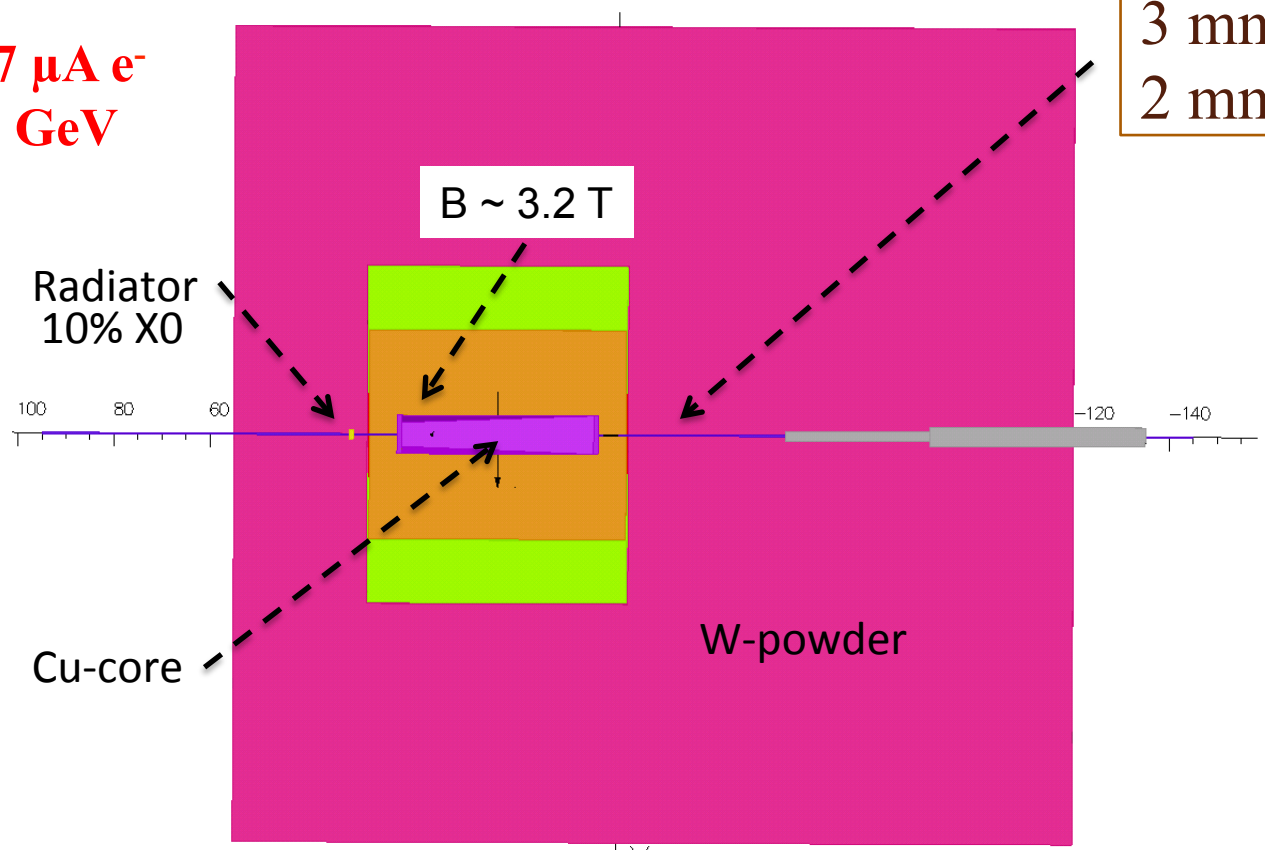

Current model of γ-Source

Distance to target ~200 cm
photon beam diameter on target ~0.9 mm

3 mm x 3 mm hole

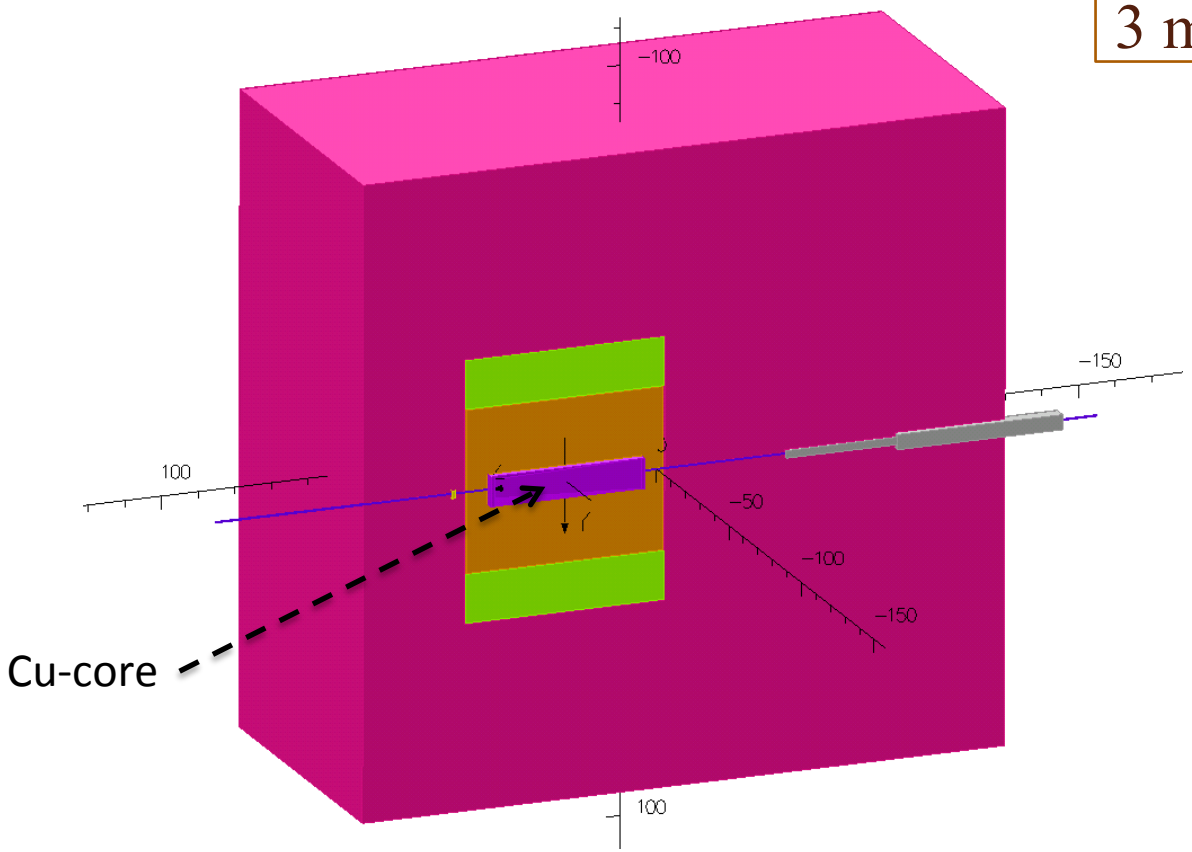

Current model of γ-Source

Distance to target ~200 cm
photon beam diameter on target ~0.9 mm

3 mm x 3 mm hole

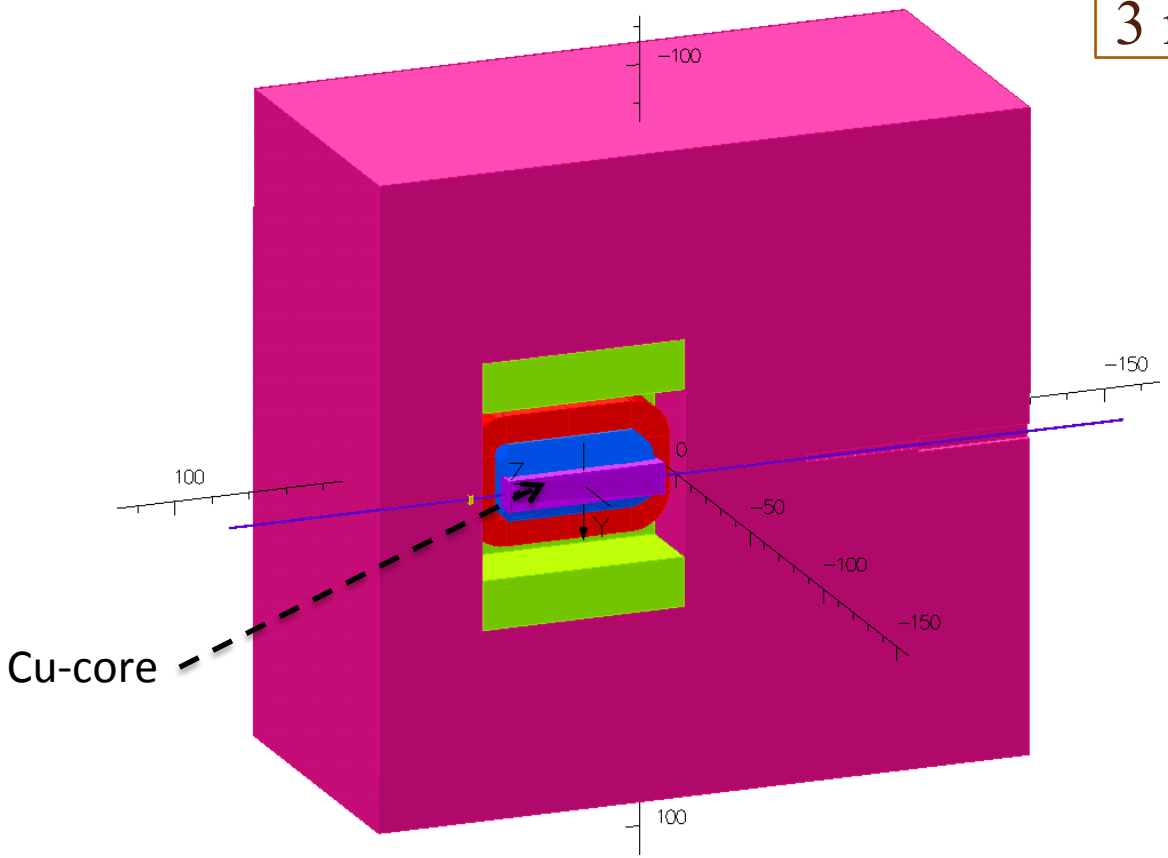

Cu-core

New developments

1. The raster is 2 mm x 2 mm (requires pol. target rotation)
2. The magnet pole is shaped to boost B field to 3.2 T -> length reduction which allows longer front shield and a wedged absorber.
3. Central absorber of Cu has 1.9 x better heat conductivity, 4.2 x longer radiation length than W-Cu (20%) alloy.
4. W-powder external shield (16 g/cm^3 density) for better shield.
5. Gradual "stepped" opening of the beam line for rad. leak reduction
6. Shielding requirement logic: the radiation from the source should be a few times lower than from the photon beam interaction with the material of a polarized target.

Graphical view of changes in the source

2015 model

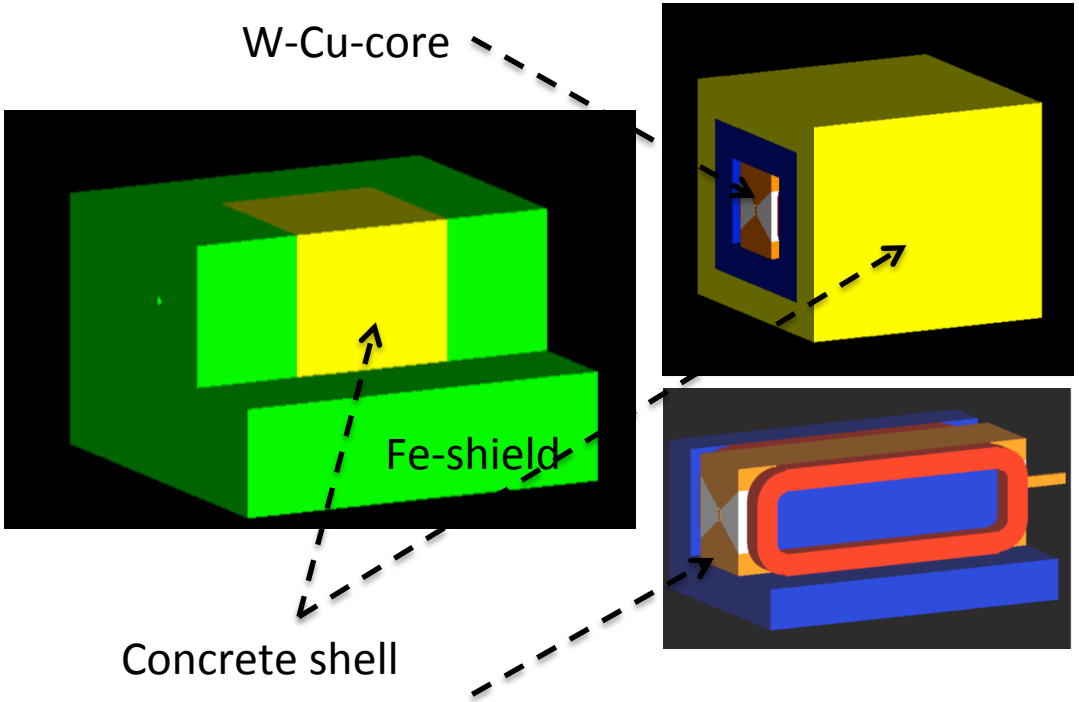

1.2 μA e⁻ 8.8 GeV

2017 model

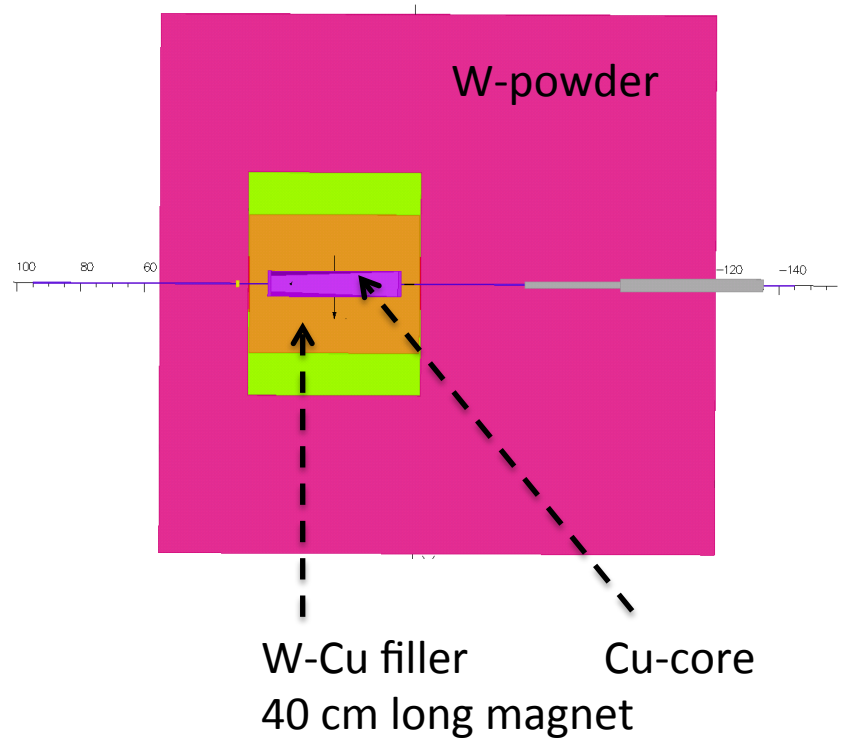

2.7 μA e⁻ 11 GeV

View of the magnet

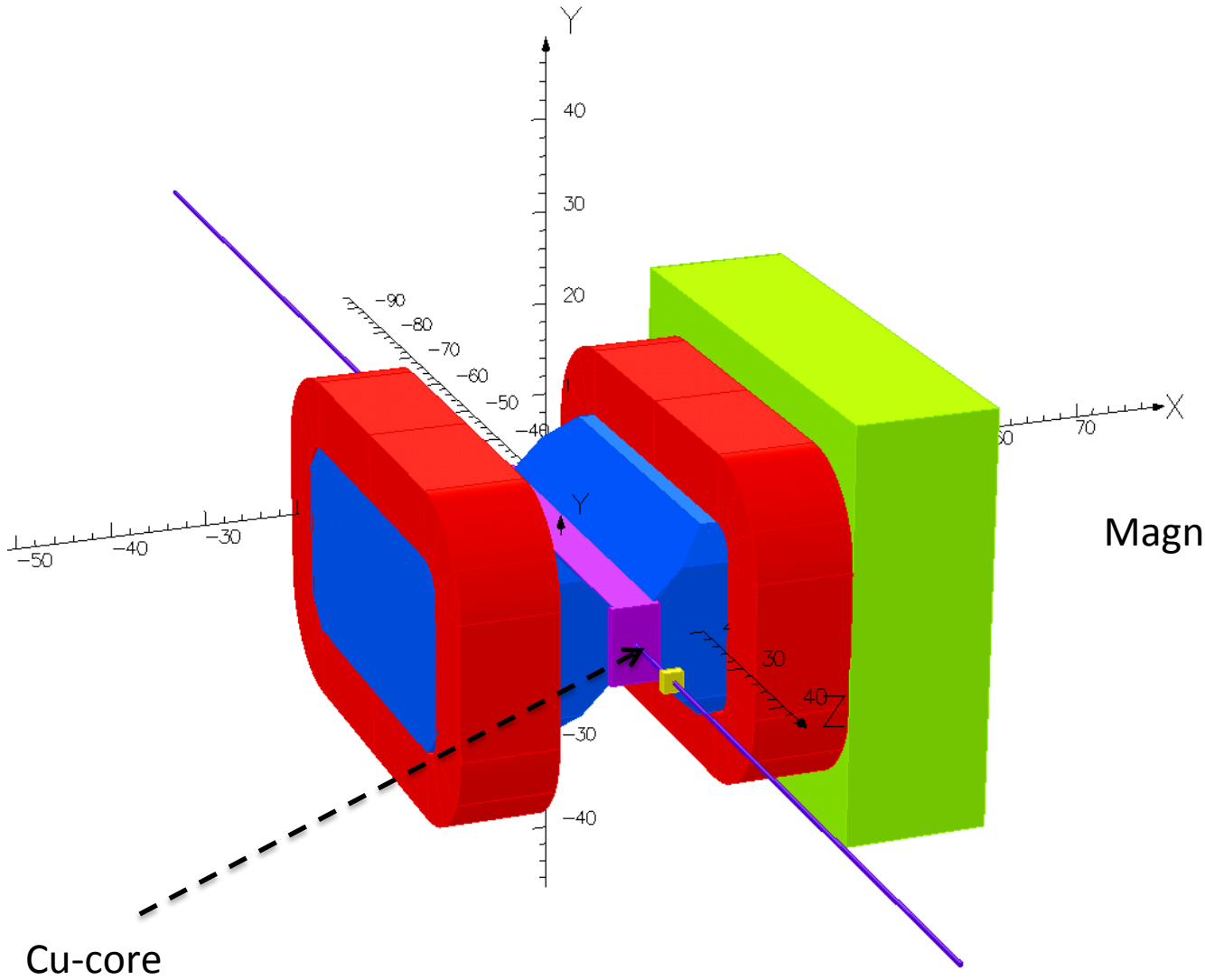

Magnet 3D view

Cu-core

View of the magnet

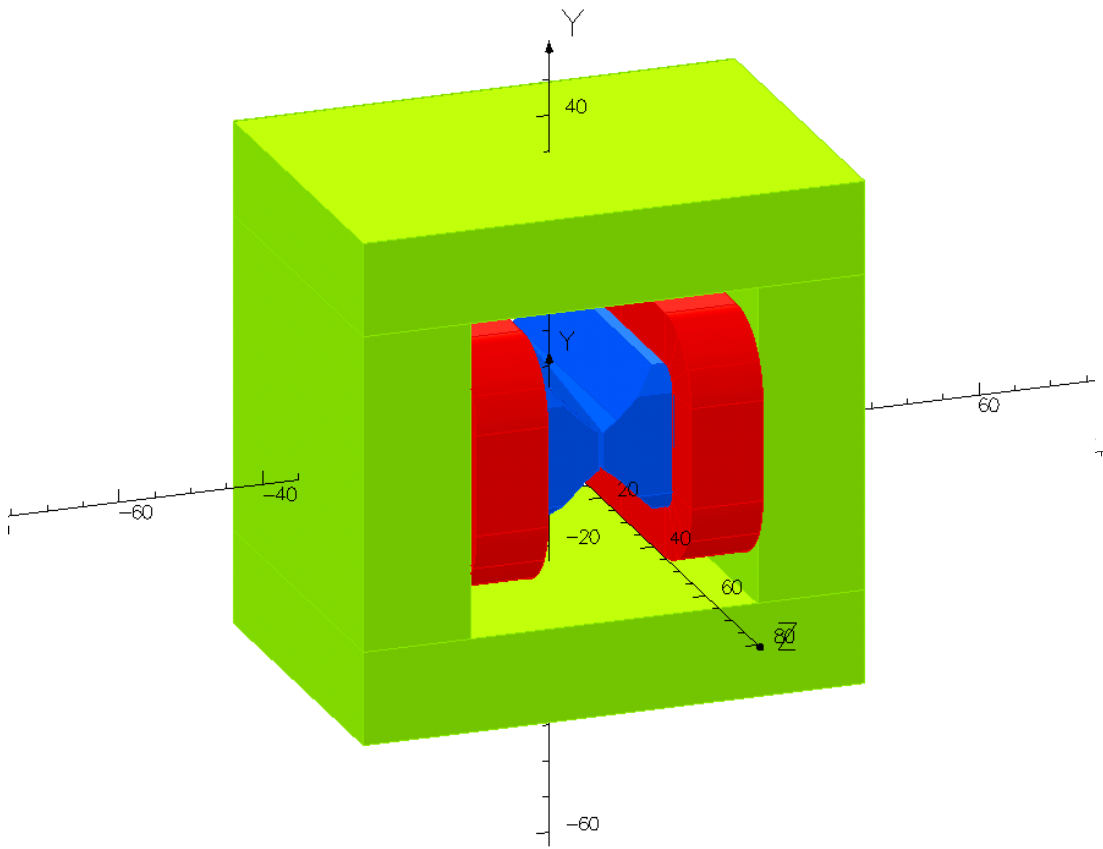

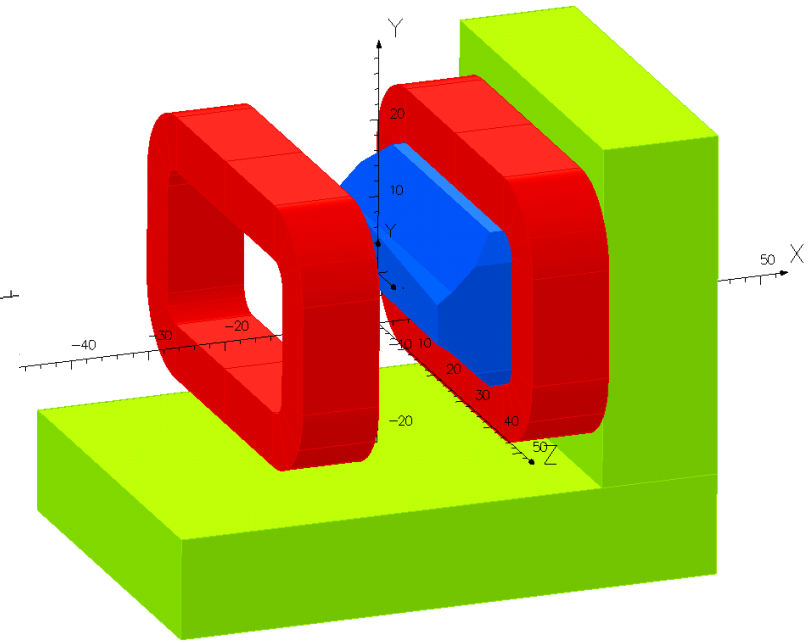

Field profiles along x and z

B vs. X at different Z

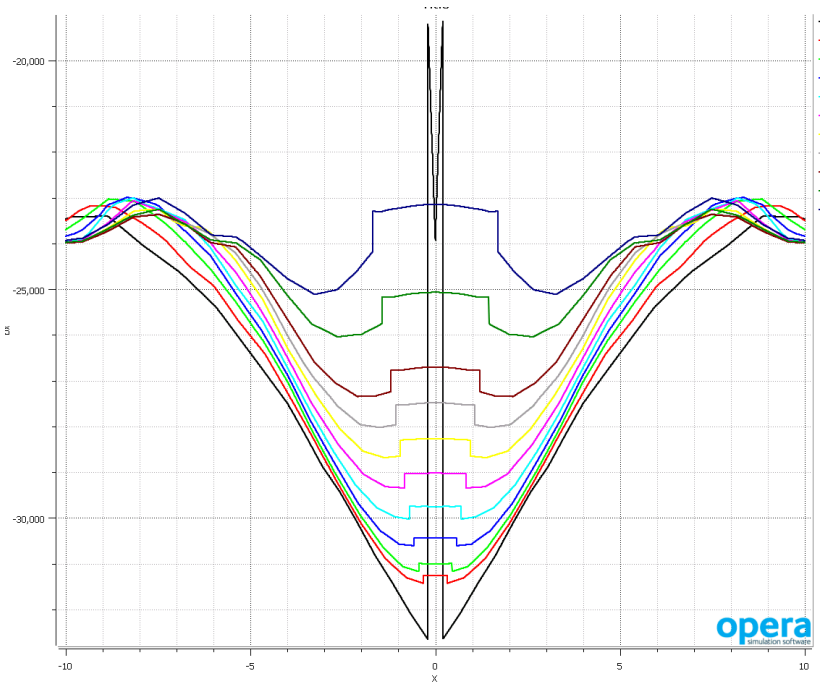

B vs. Z at X = Y =0

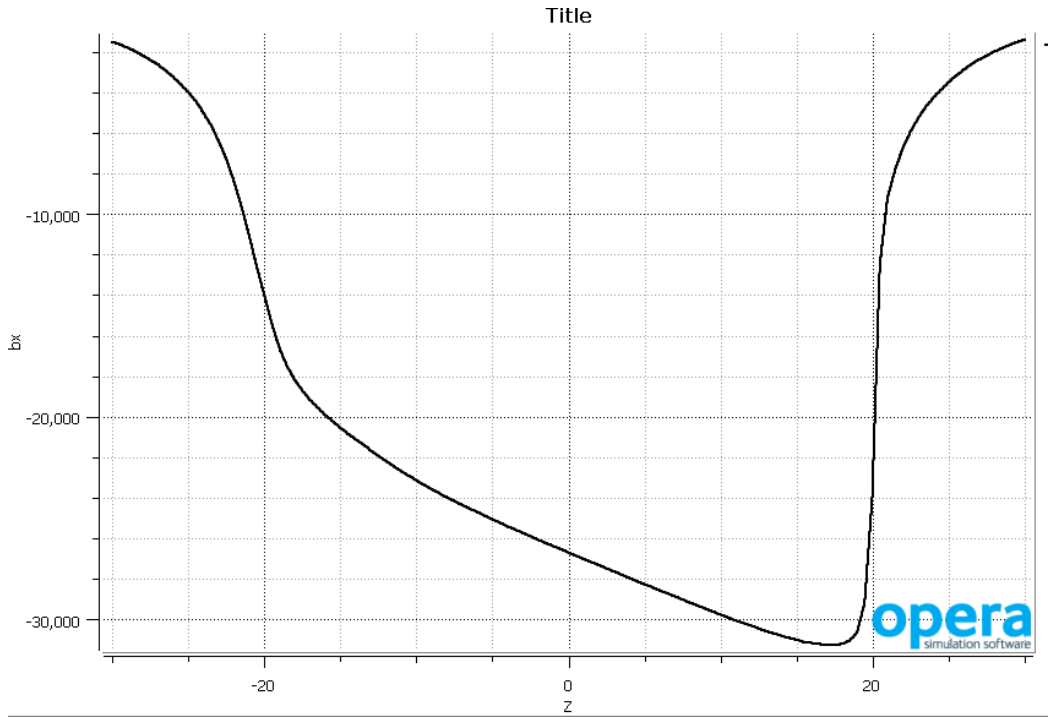

Tracks 1 GeV and 11 GeV

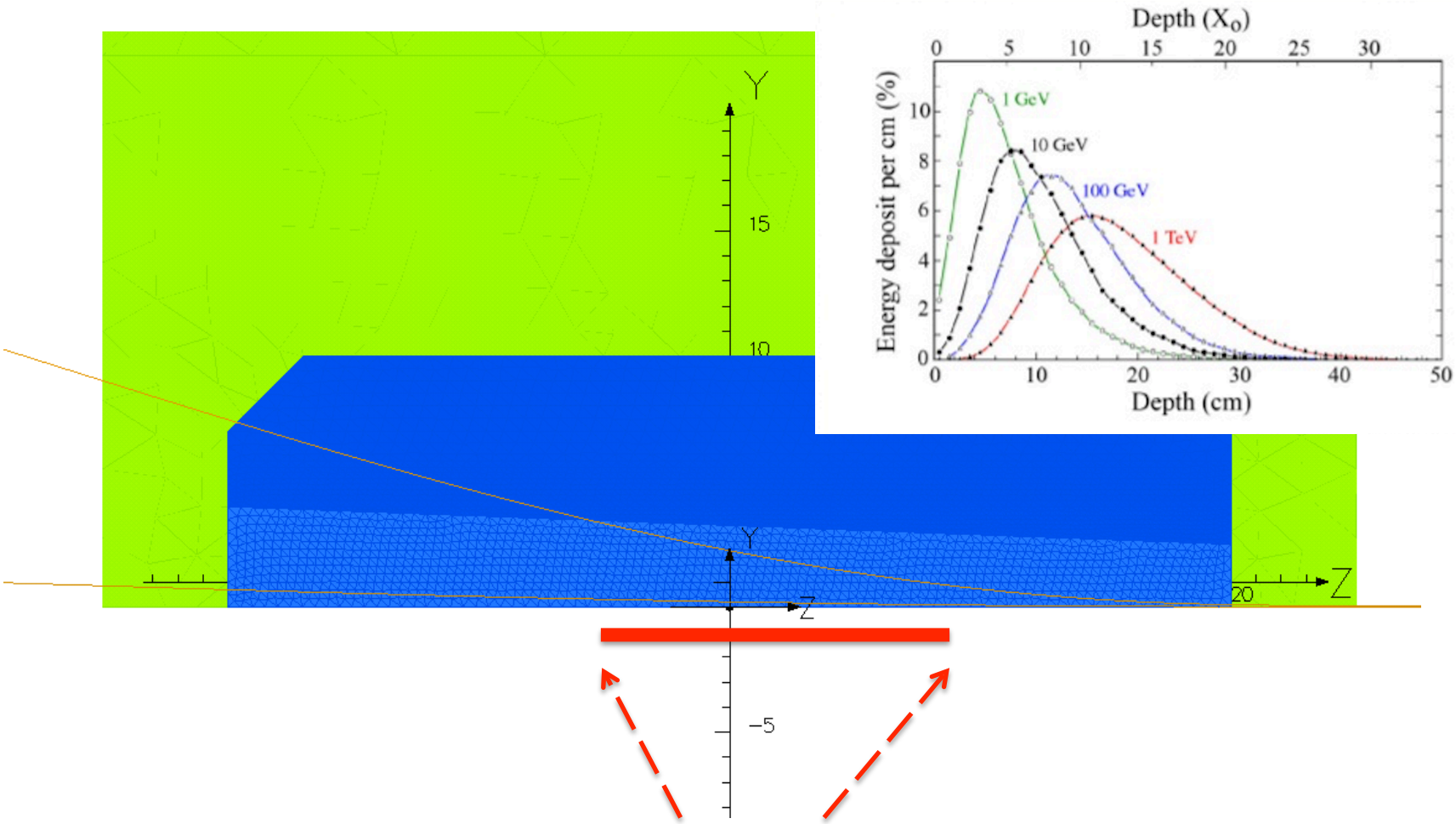

Range of the beam entrance (for 11 GeV) to the Cu absorber

External shield-1

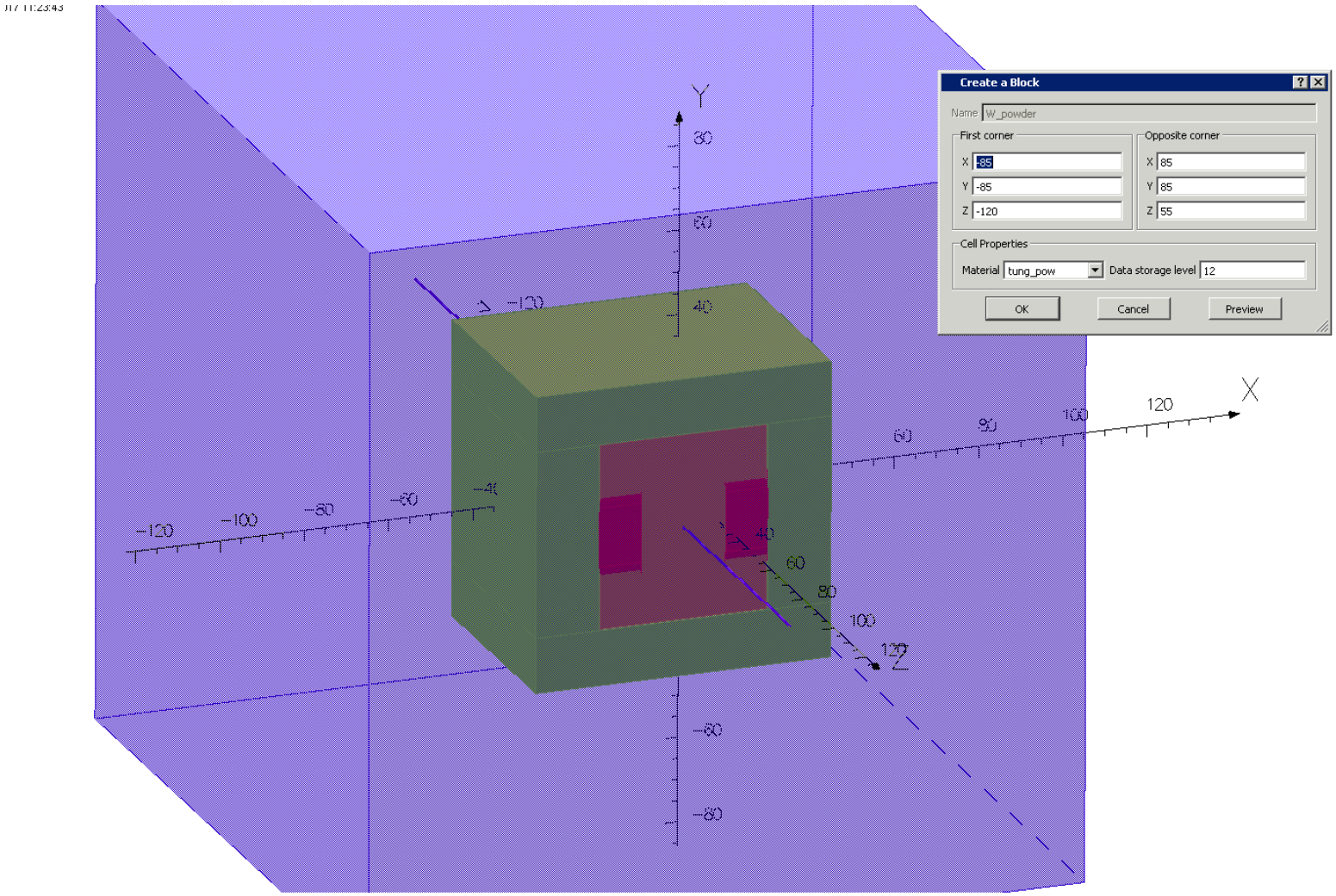

M2_Box_A_1_W-powder.png shows all dimensions and location of the outer Tungsten shielding

External shield-2

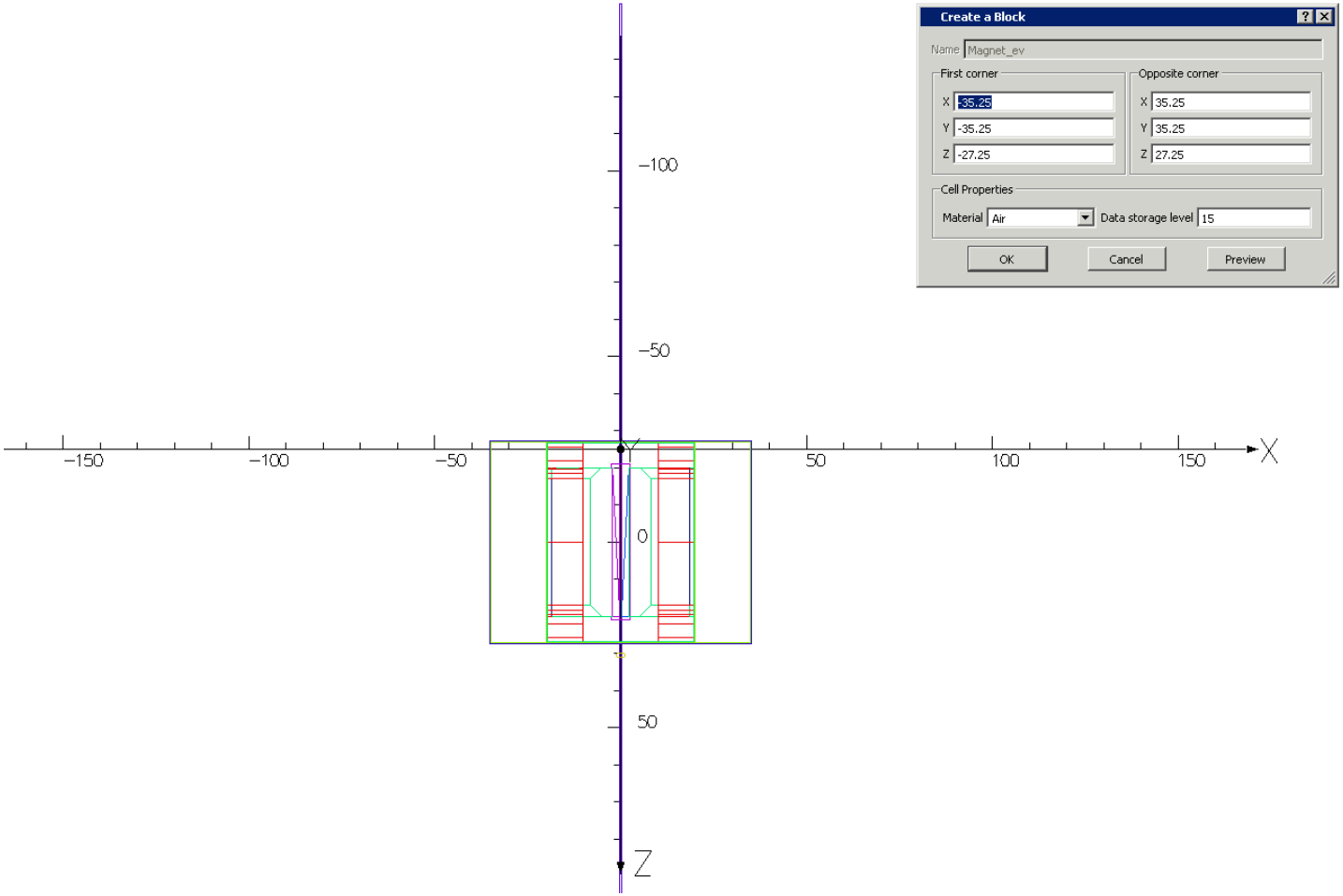

M2_Box_A_2_Exclusion_1_top_view.png shows all dimensions and location of the exclusion from Box A needed for the magnet.

External shield-3

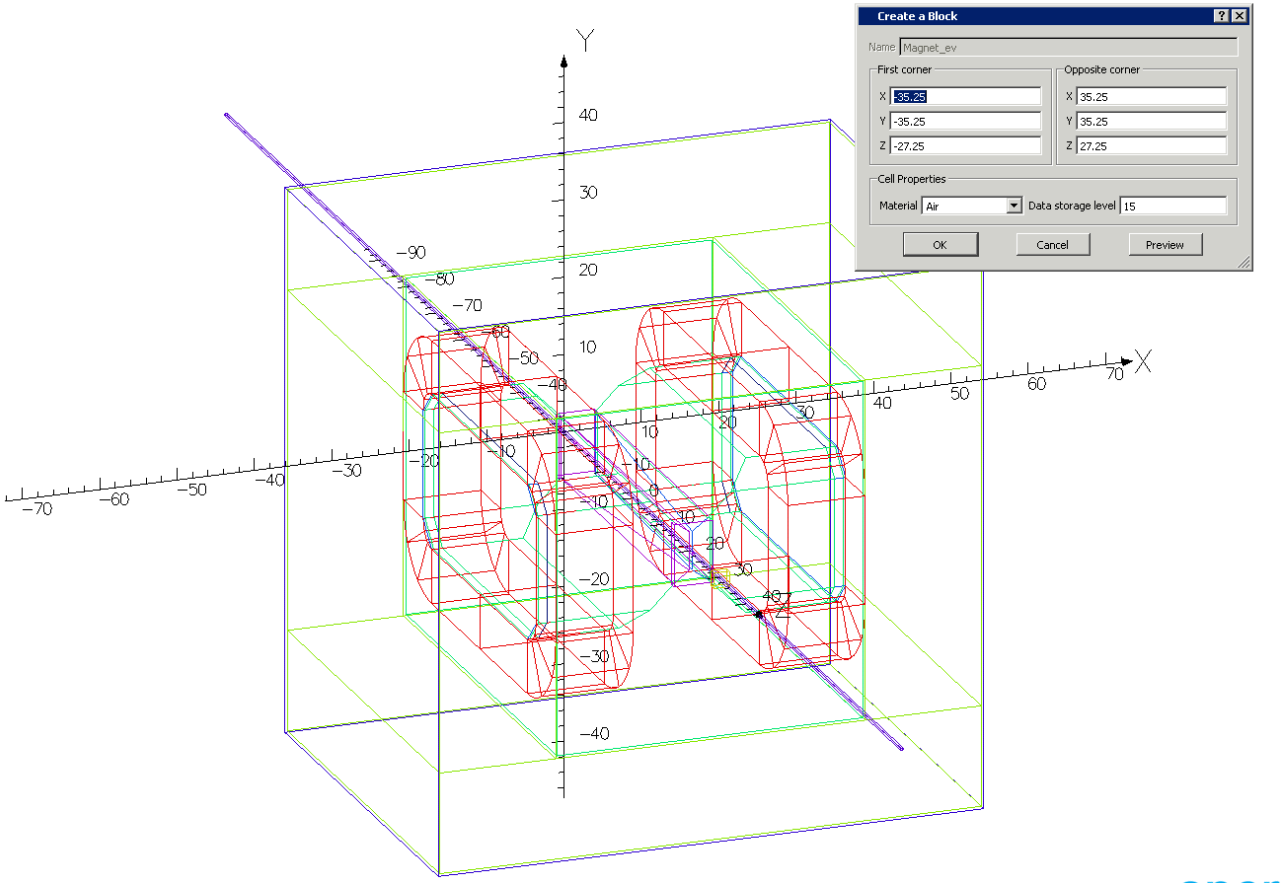

M2_Box_A_2_Exclusion_1.png shows 3D and all dimensions and location of the exclusion from Box A needed for the magnet.

External shield-4

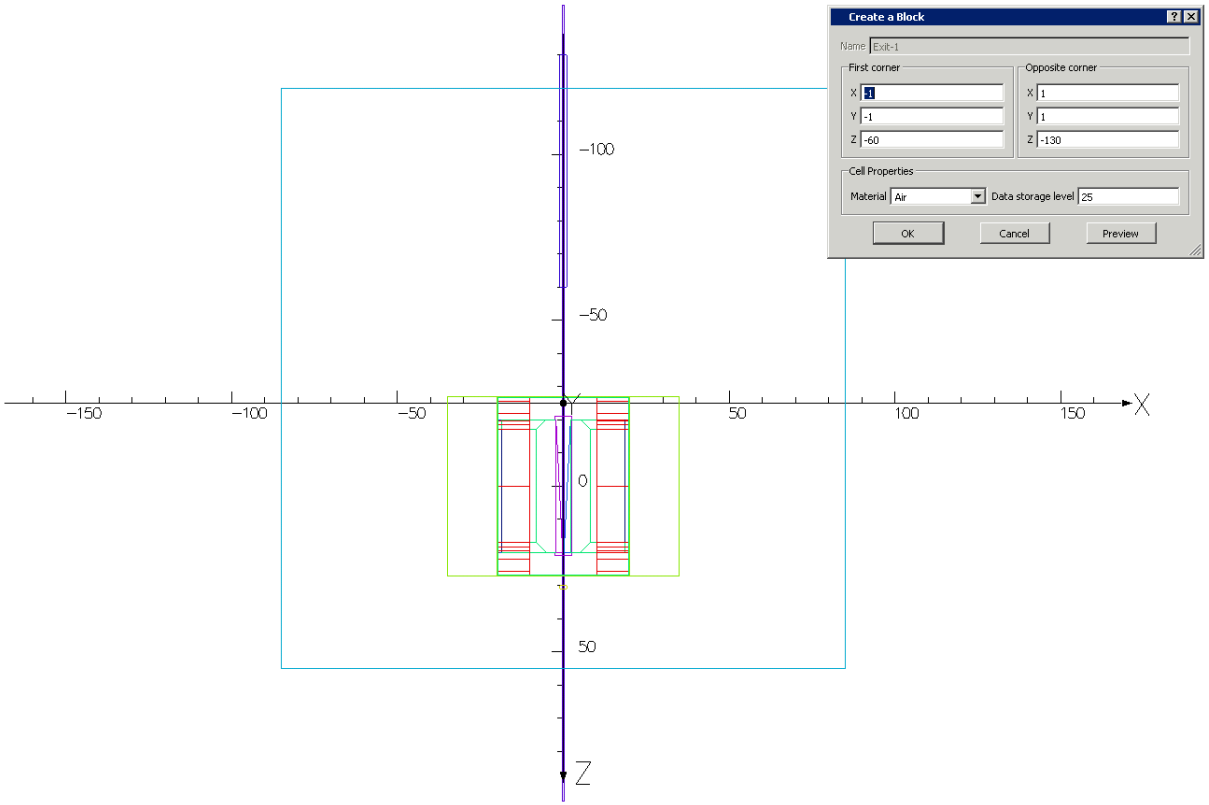

M2_Box_A_3_Exit-1.png shows all dimensions and location of the exclusion from Box A needed for the beam line.

External shield-5

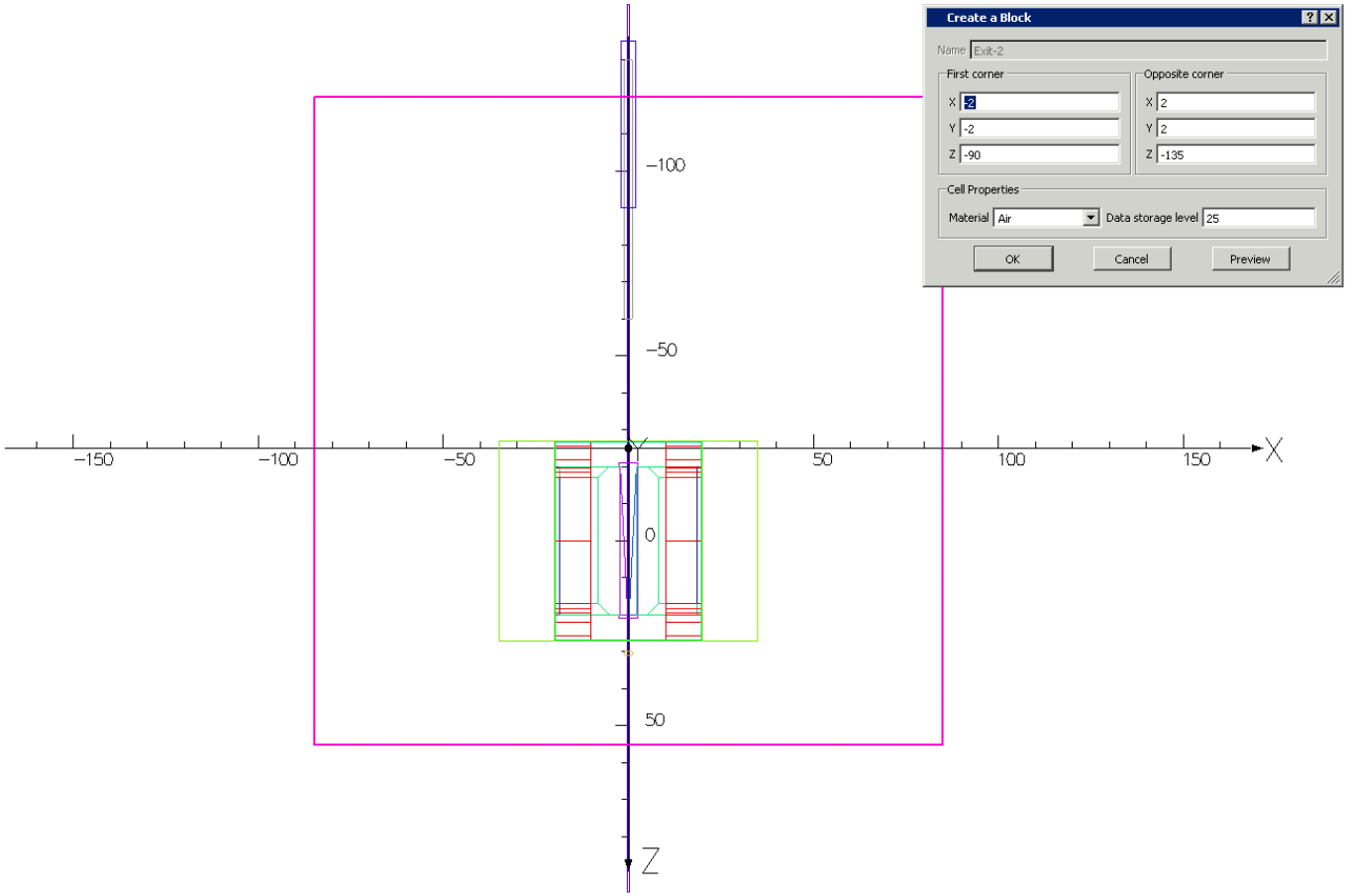

M2_Box_A_4_Exit-2.png shows all dimensions and location of the second exclusion from Box A needed for the beam line.

External shield-6

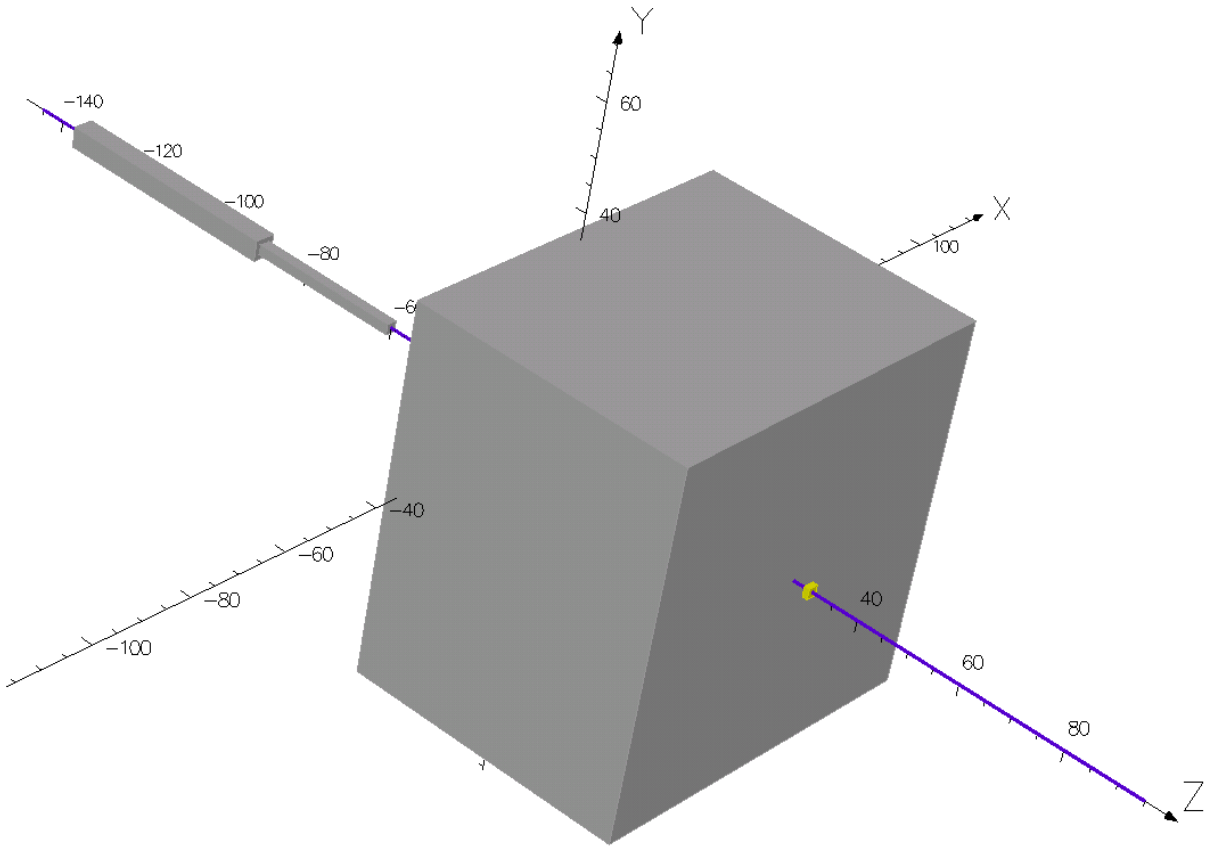

M2_Box_A_5_Exclusions_3D.png shows all volumes which need to be excluded from the External shield box.

Core shielding-1

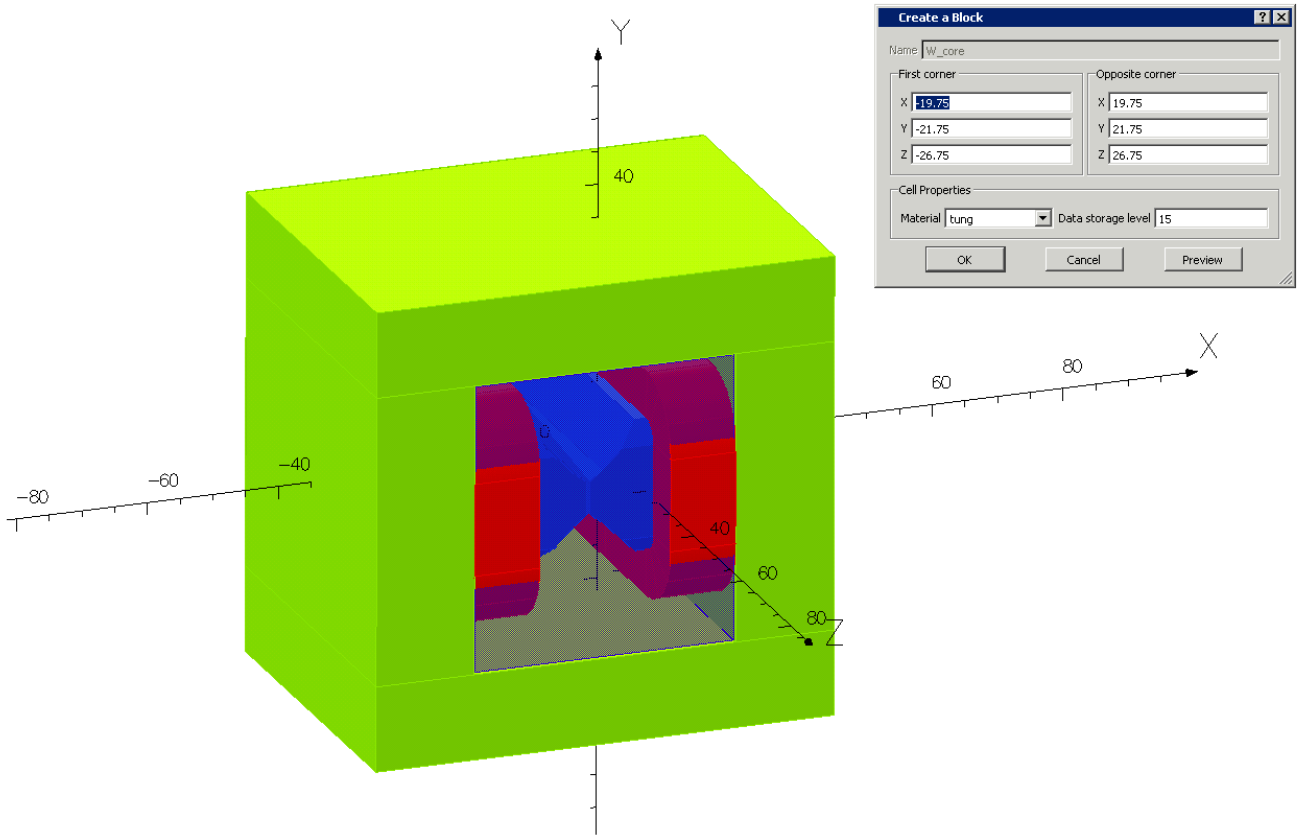

M2_Box_B_1_W-core.png shows all dimensions and location of the core shielding located inside the magnet and made from W-Cu(20%) alloy.
The exclusions need to be made for: a) coils b) poles c) Cu-core insert d) beam opening (3mm x 3mm).

Core shielding-2

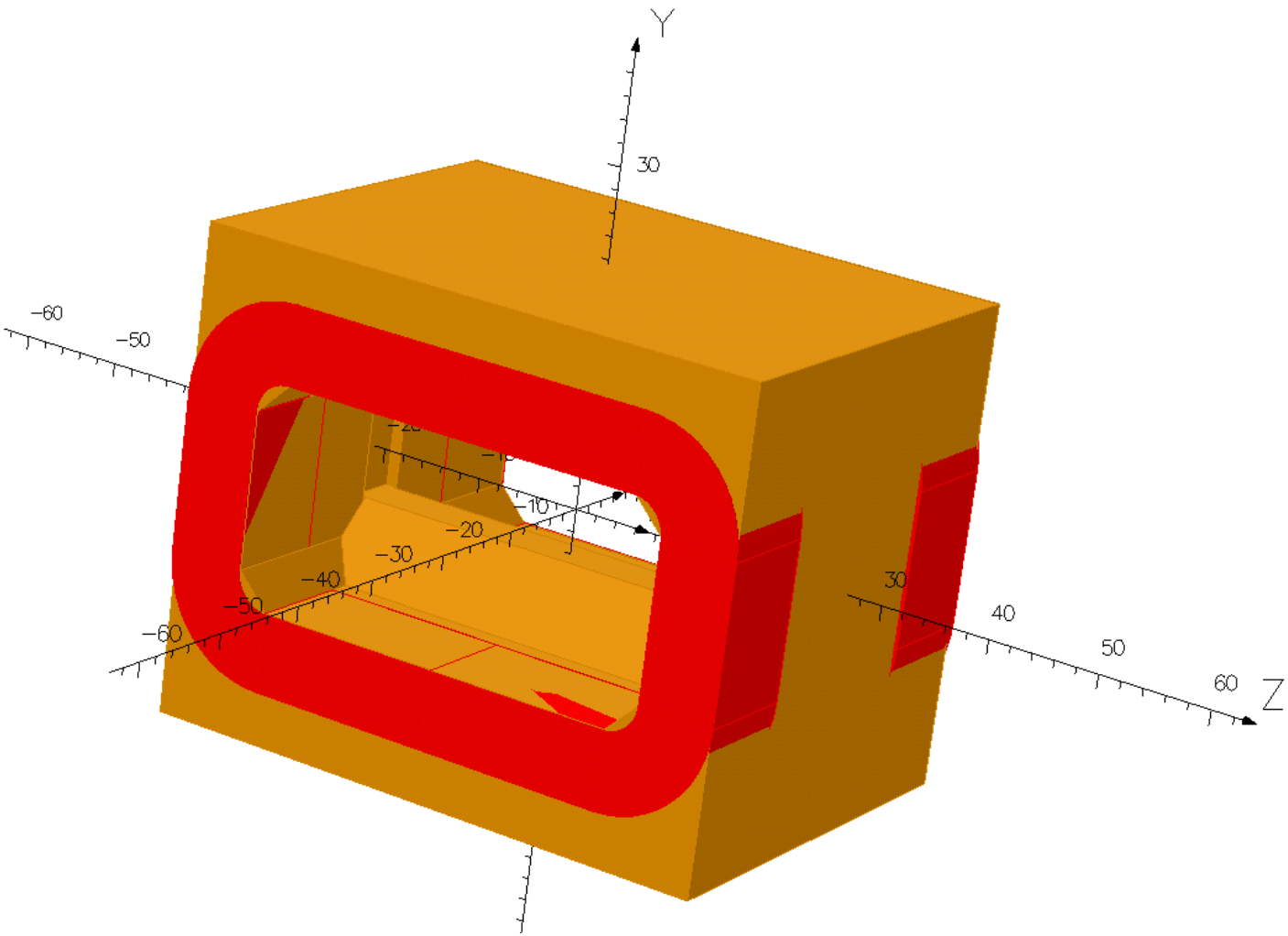

M2_Box_B_2_W-core_3D-view.png shows all that is left of the W-core.

Core shielding-3

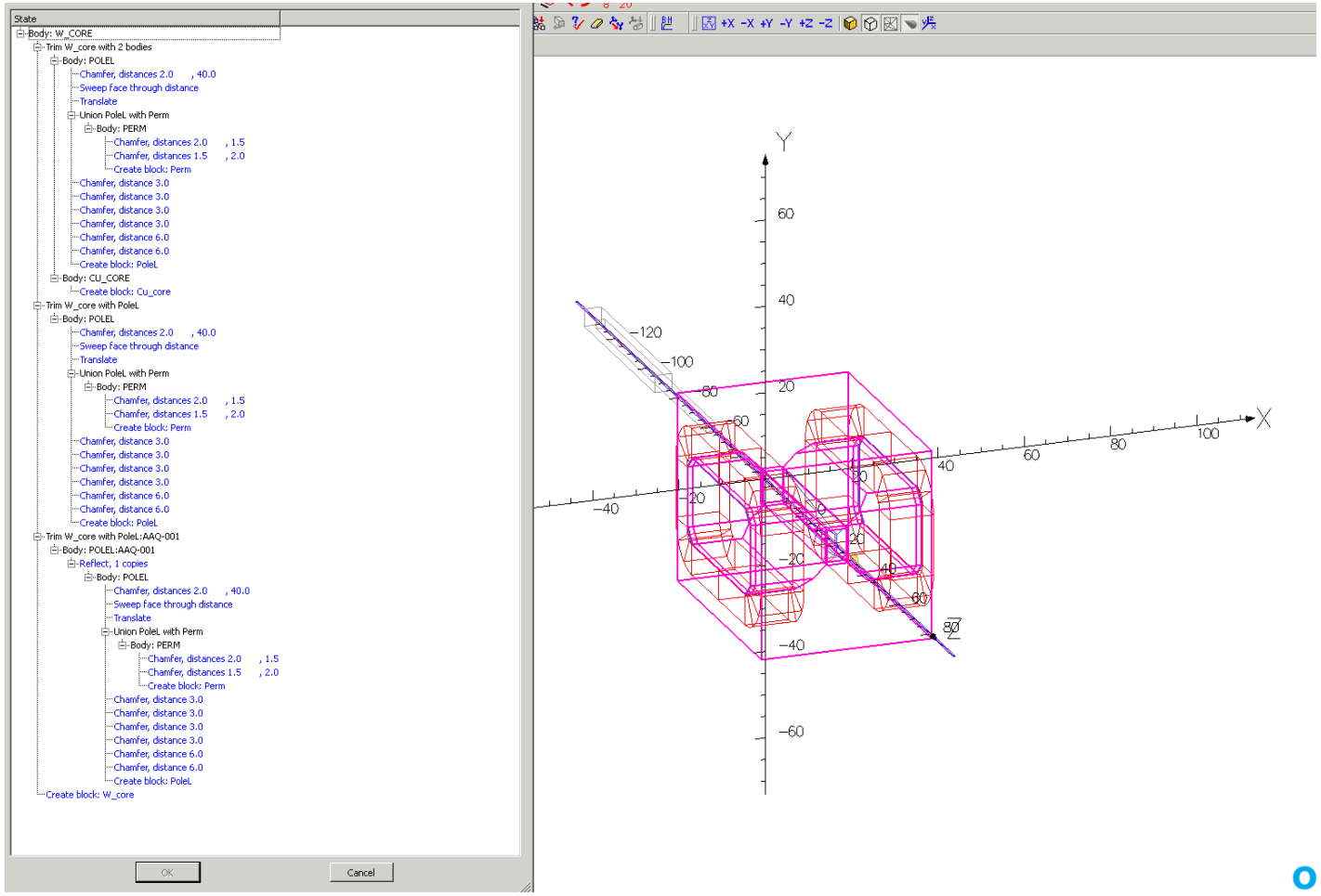

M2_Box_B_3_W-core_exclusions.png shows list of exclusions from a simple box – the poles, the copper core and beam opening.

Beam opening-1

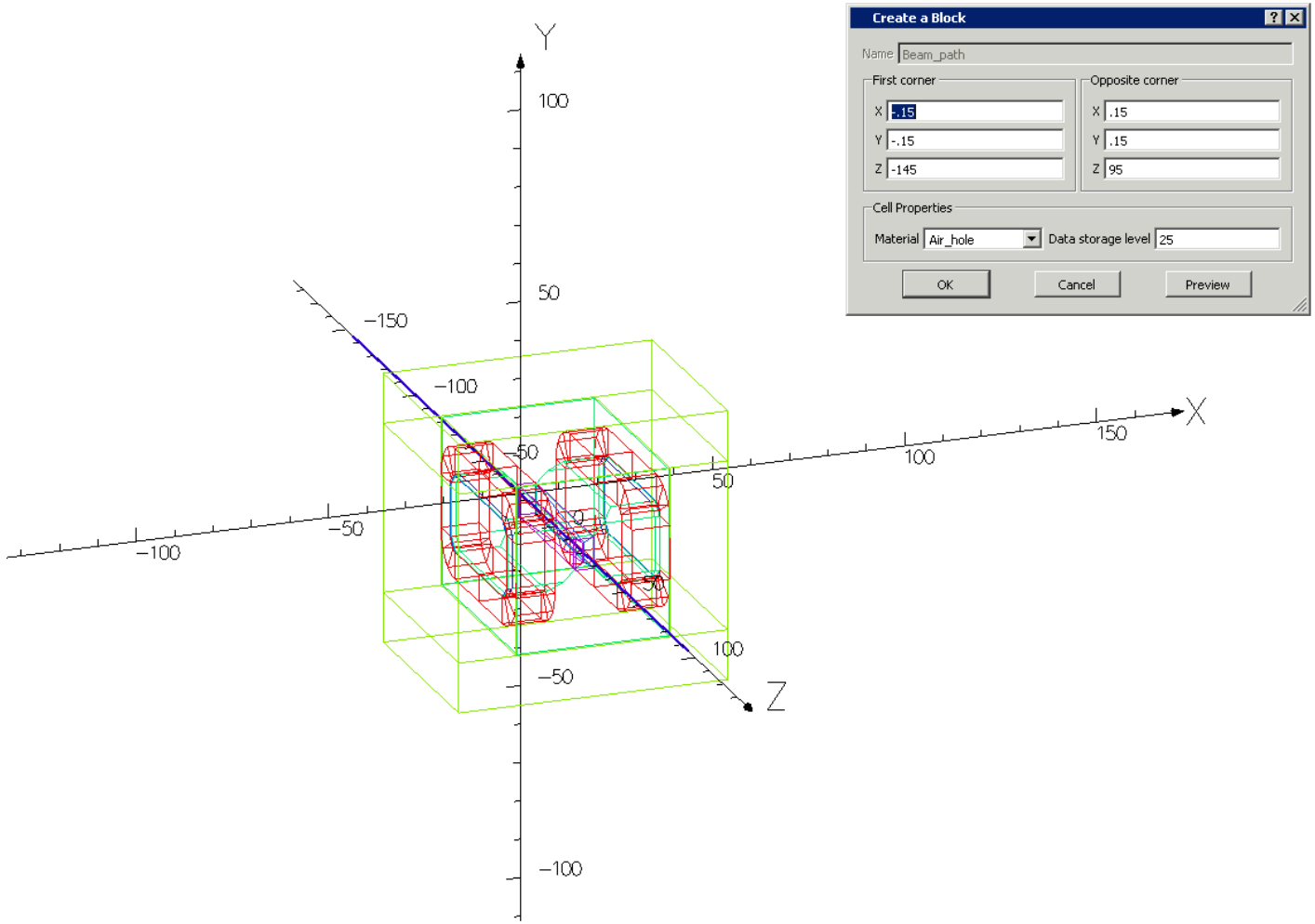

M2_Box_C_1_Beam_opening.png shows dimensions of the beam channel – a 3 mm x 3 mm hole.

Cu-core-1

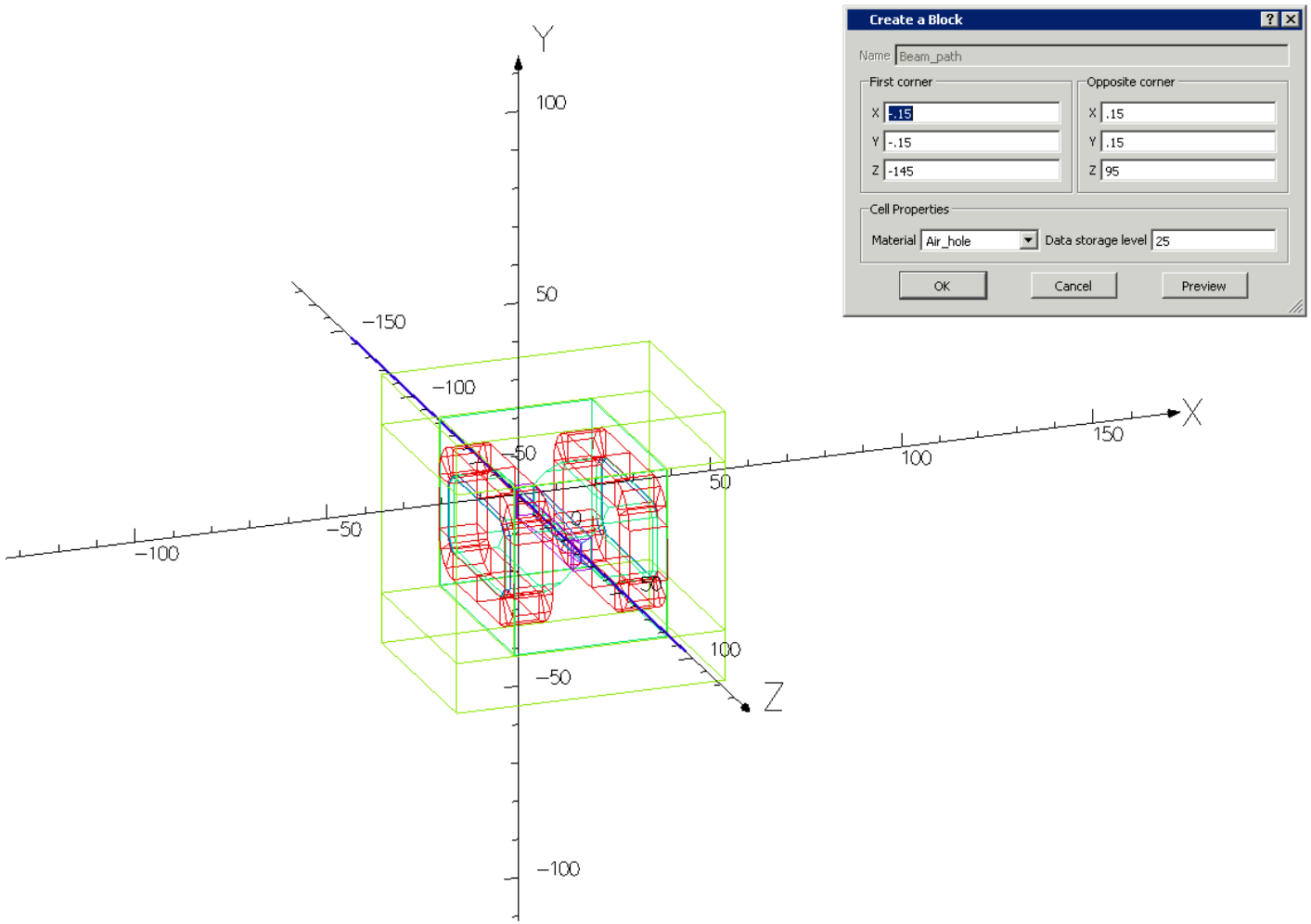

M2_Box_D_1_Cu-core.png shows dimensions of the Cu beam absorber (initial box).

Cu-core-2

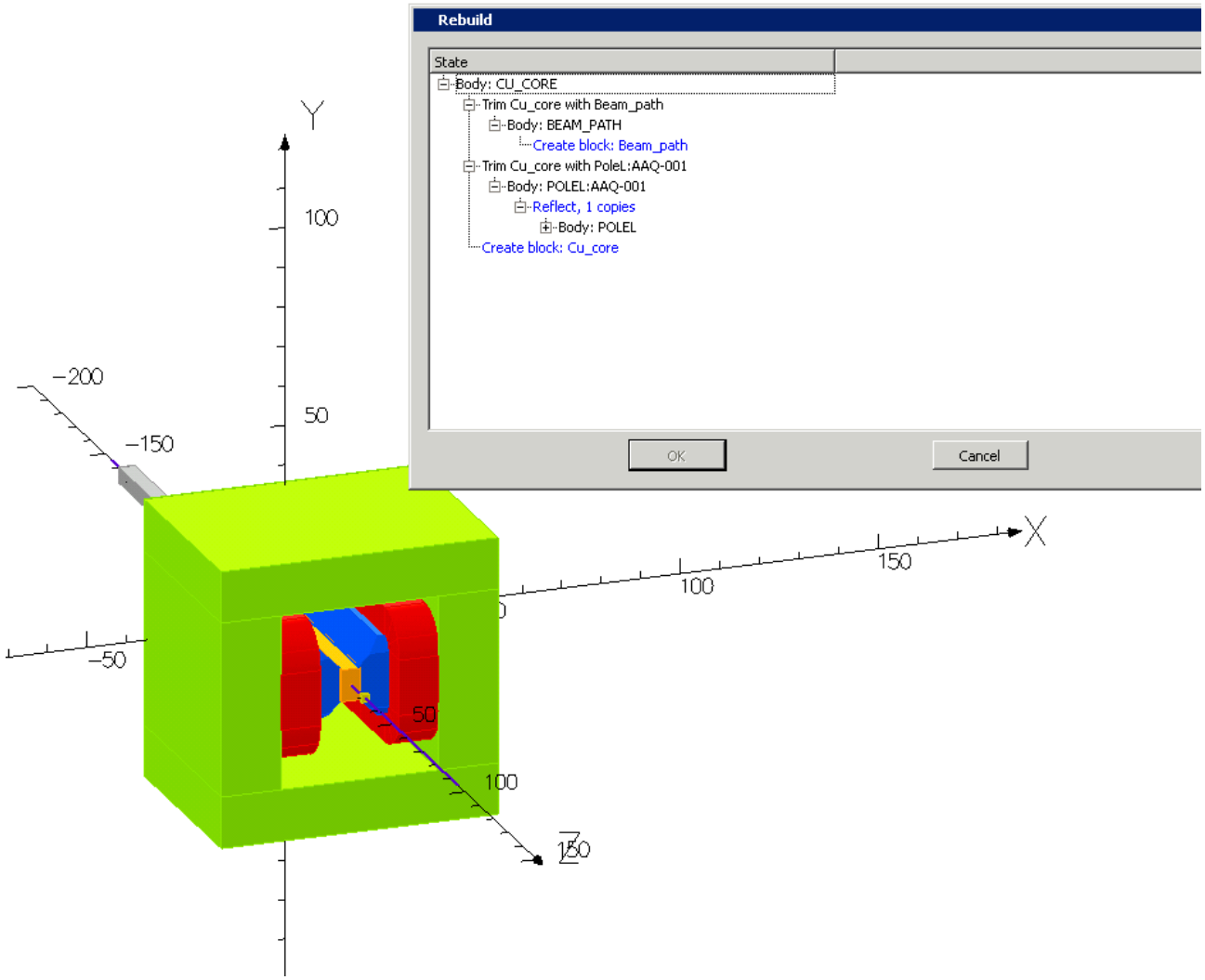

the Cu-core initial box – poles (Box_E) and Beam opening (Box_C).

Cu-core-3

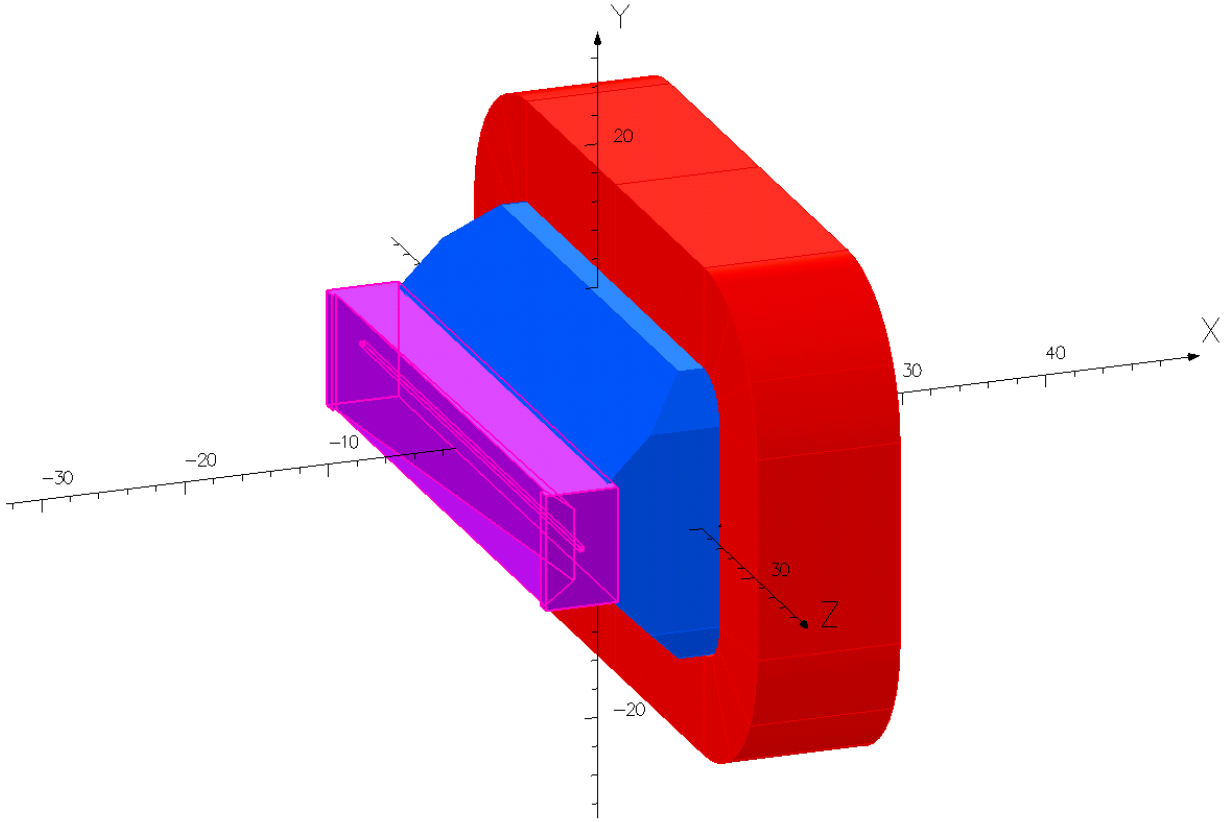

M2_Box_D_3_Cu-core_3D.png shows a 3D view of the Cu core.

Pole-1

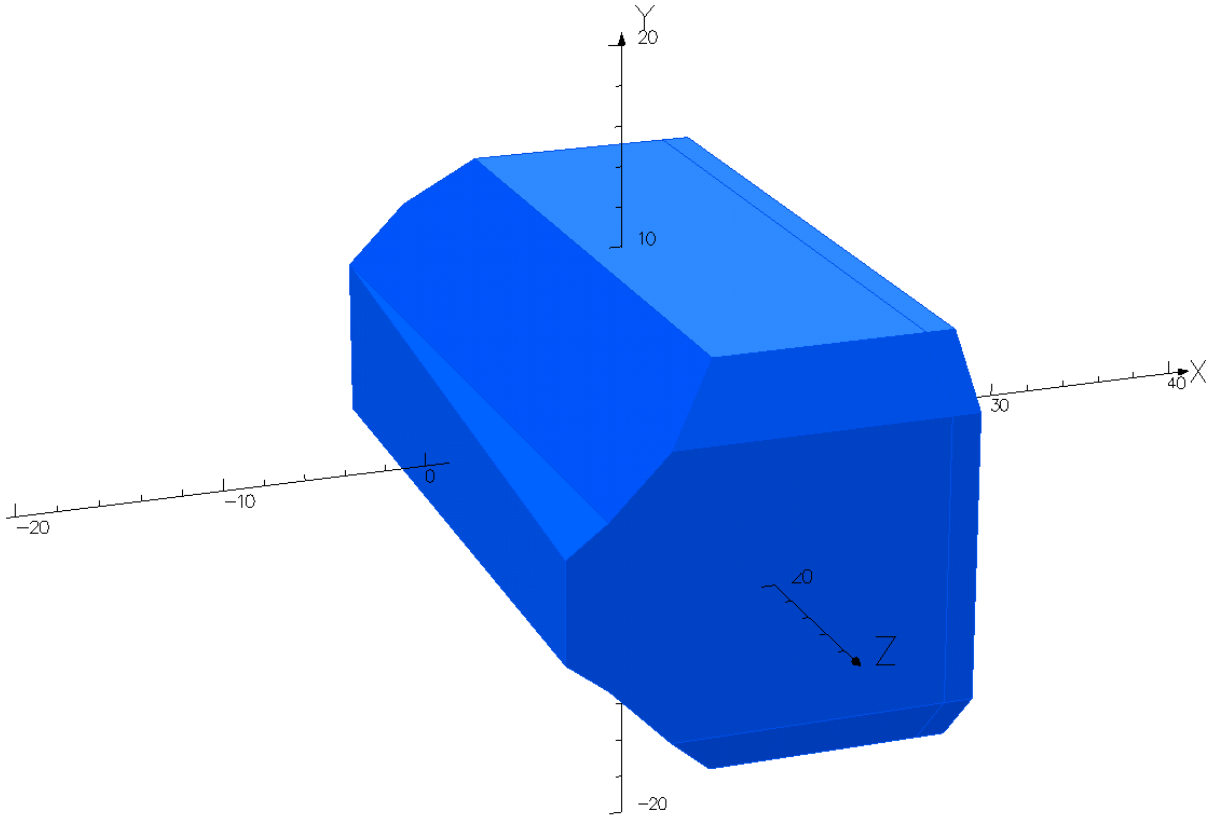

M2_Box_E_Pole_3D.png shows a 3D view of the magnet pole

Pole-2

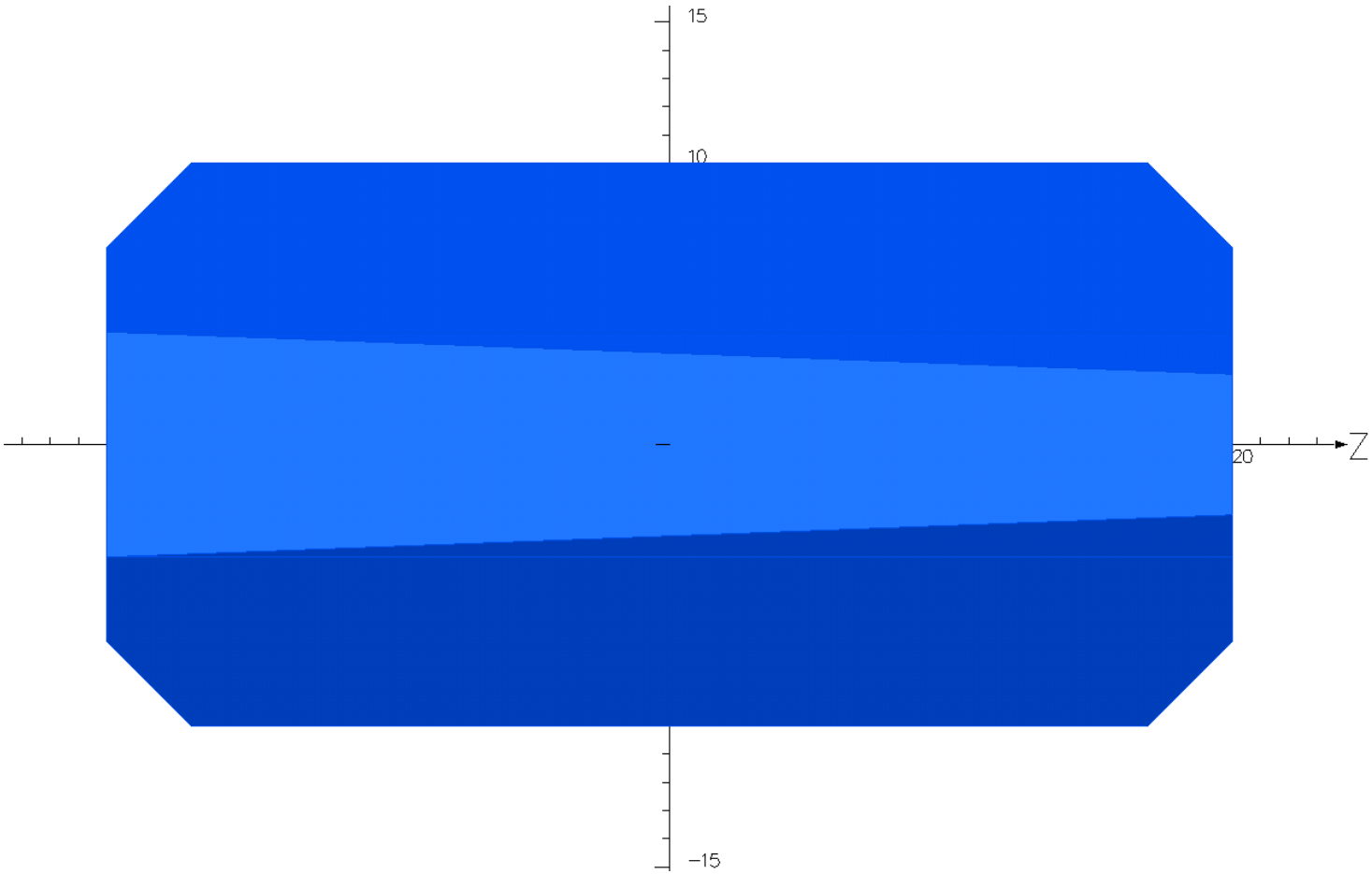

M2_Box_E_Pole_Side-view.png shows a side view of the magnet pole

Pole-3

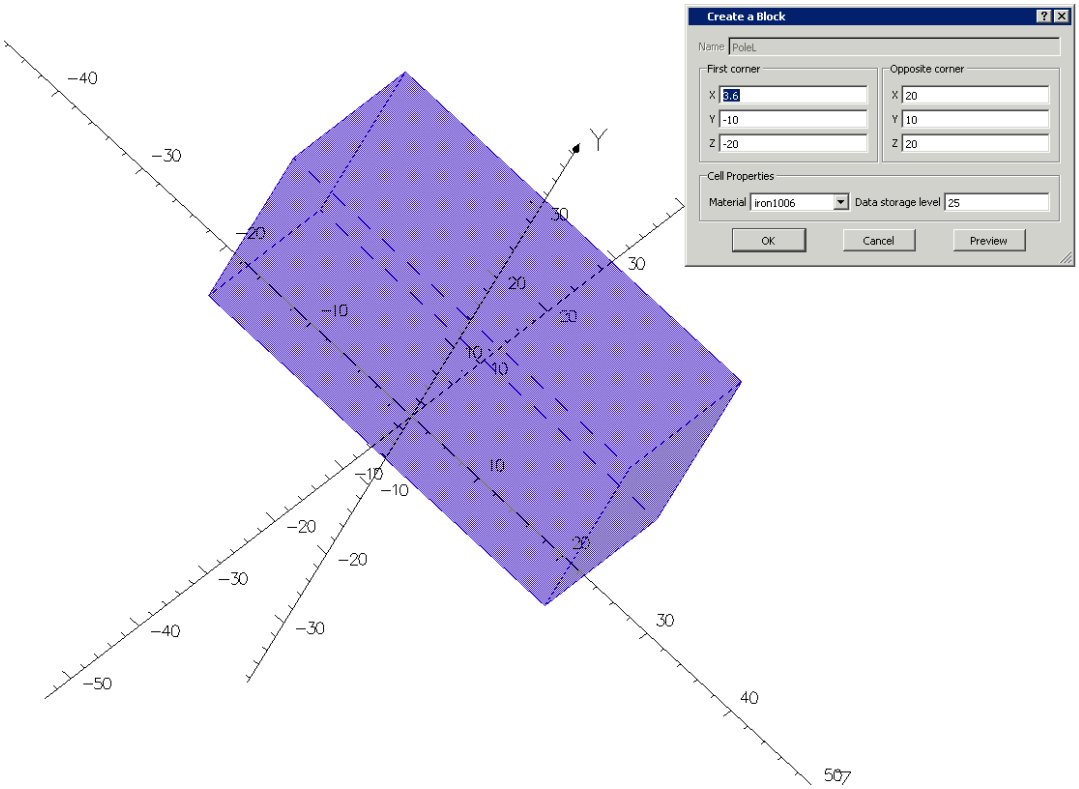

M2_Box_E_Pole_start.png shows dimensions of the magnet pole initial box

Pole-4

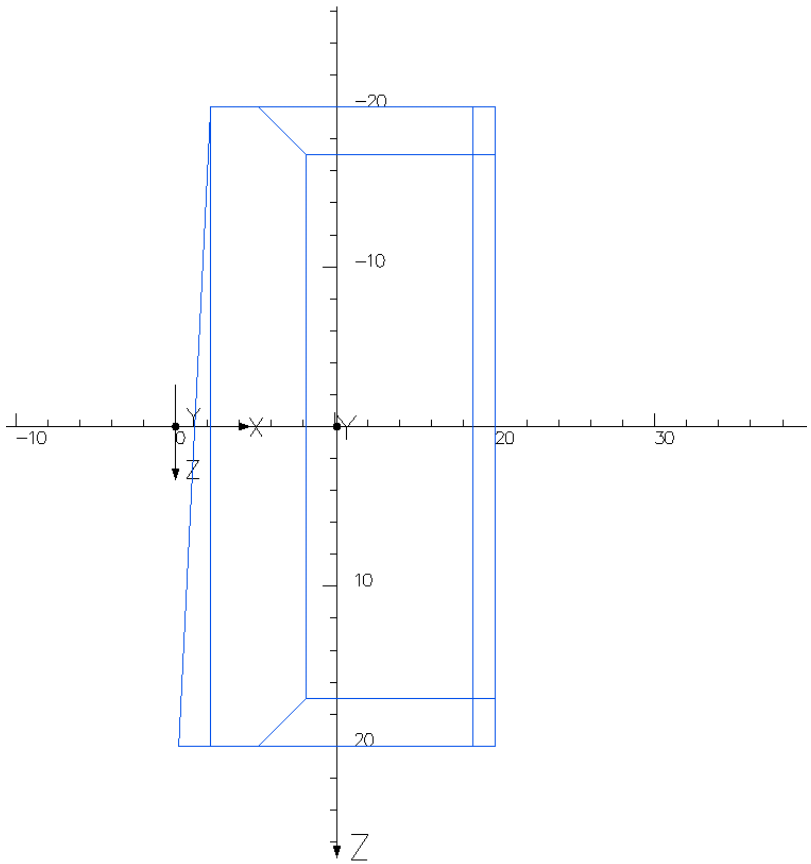

M2_Box_E_Pole_Top-view.png shows dimensions of the magnet pole

Pole-5

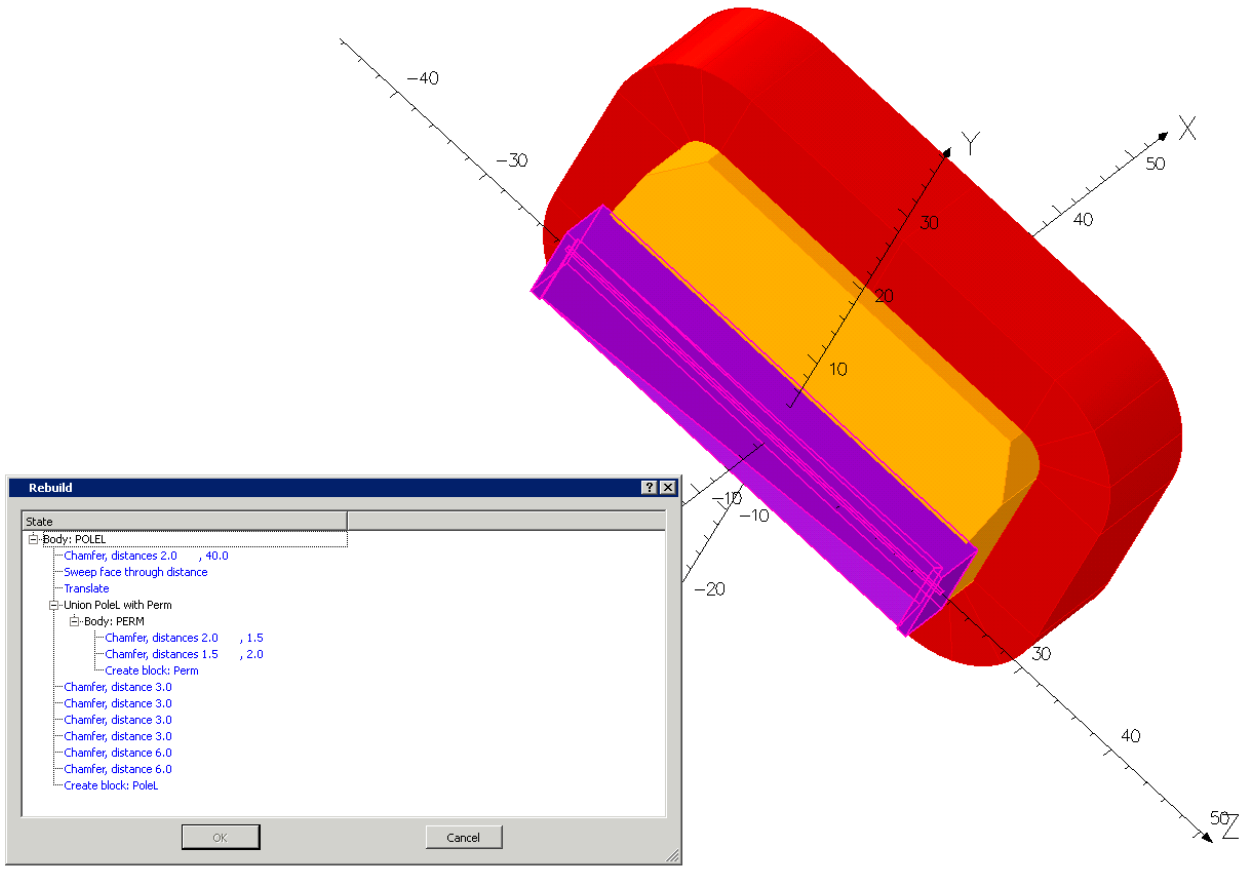

M2_Box_E_Pole_Trims.png is showing dimensions of the magnet pole trims and a pole tip

Pole-6

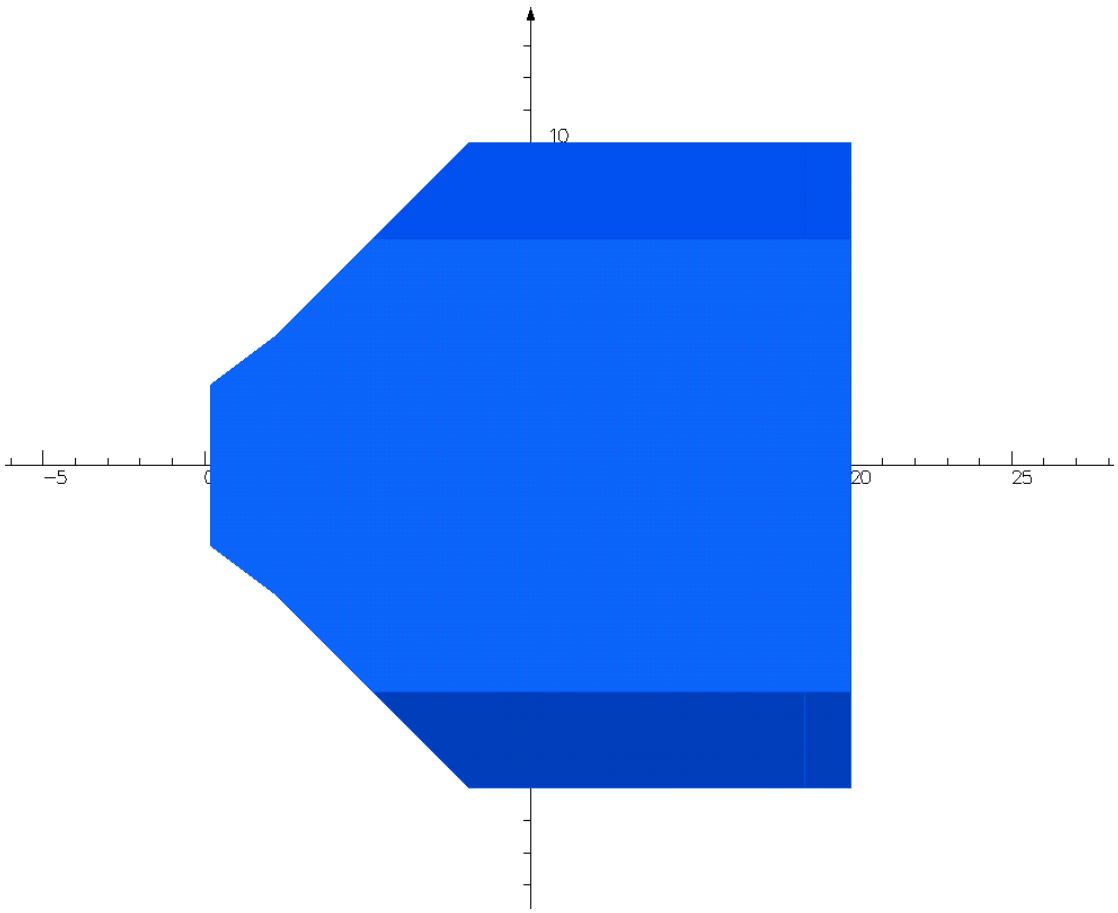

M2_Box_E_Pole_Z-view.png shows dimensions of the pole and a pole tip

Pole-7

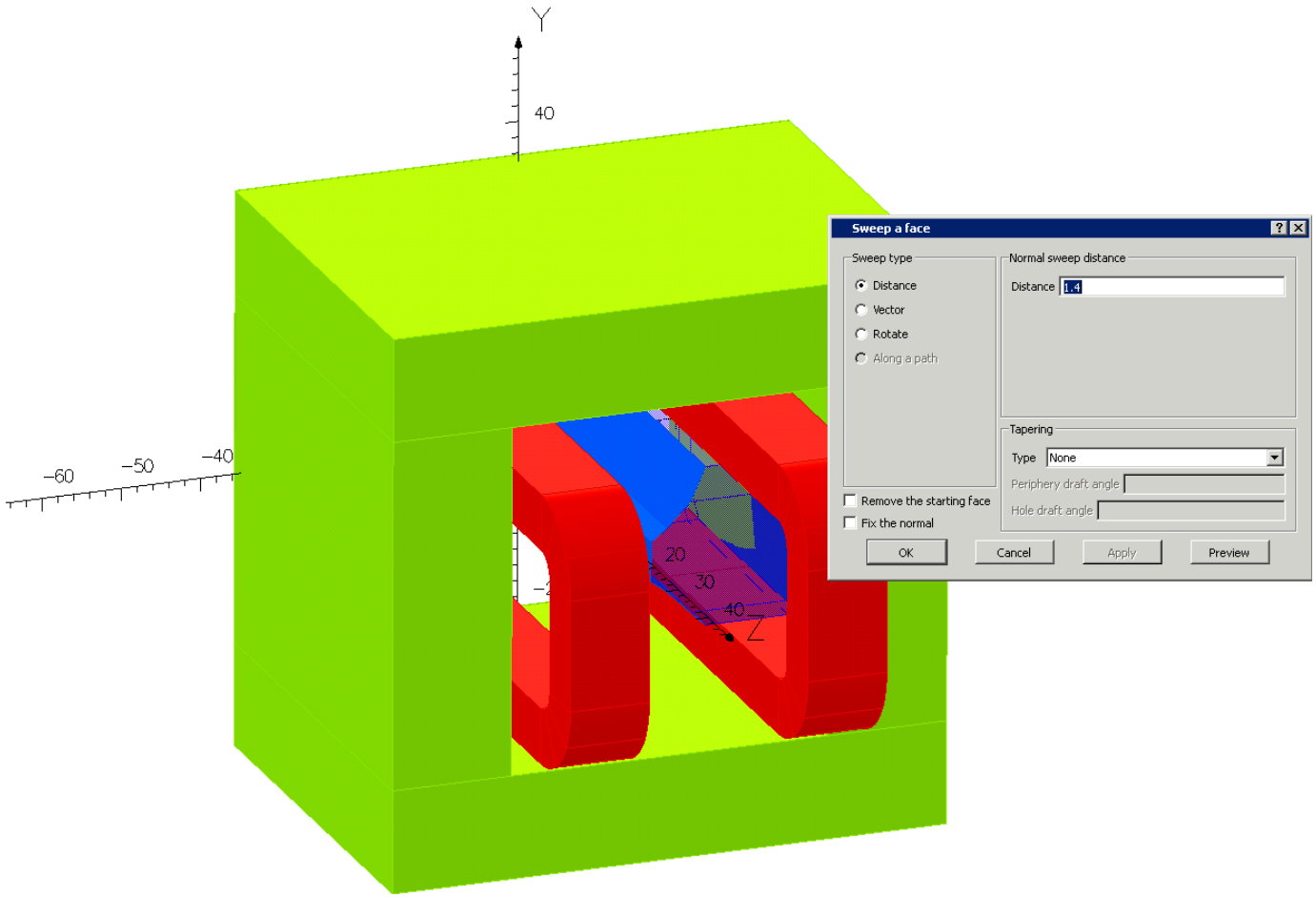

M2_Box_E_Pole_Sweep_back.png shows dimensions of the pole sweep-back correction

Pole-8

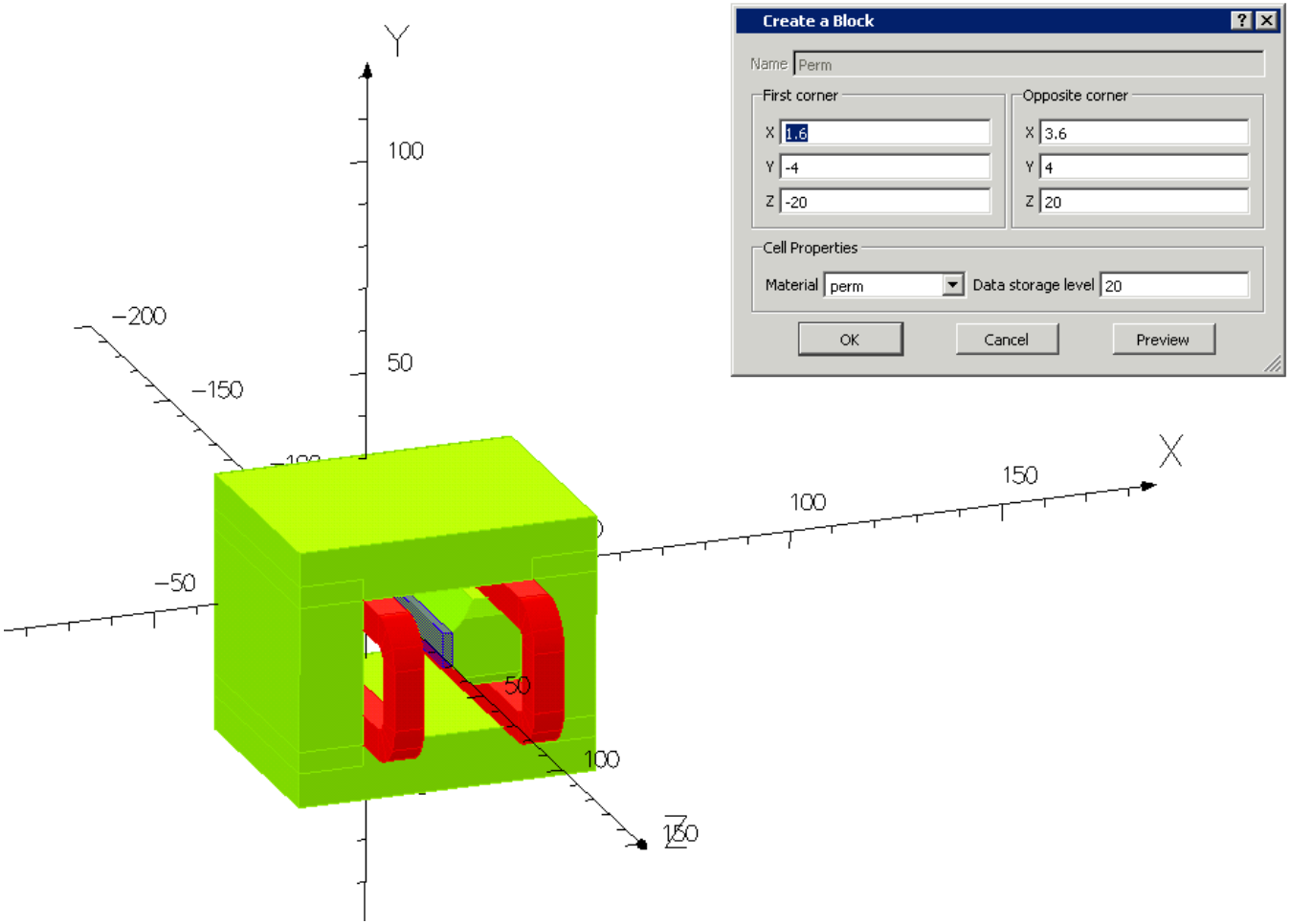

M2_Box_E_Pole_Tip-plate.png shows dimensions of the pole tip initial box

Pole-9

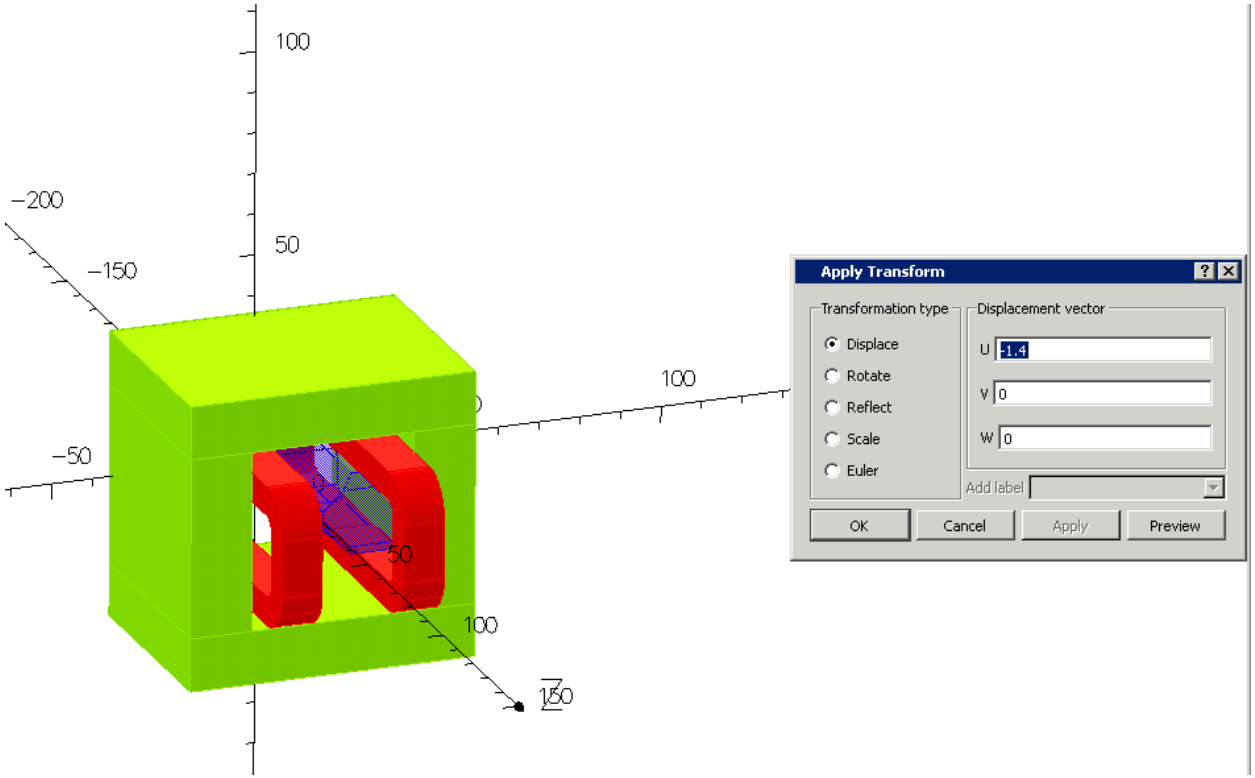

M2_Box_E_translation.png shows the size and direction (x) of the pole translation

Magnet-1

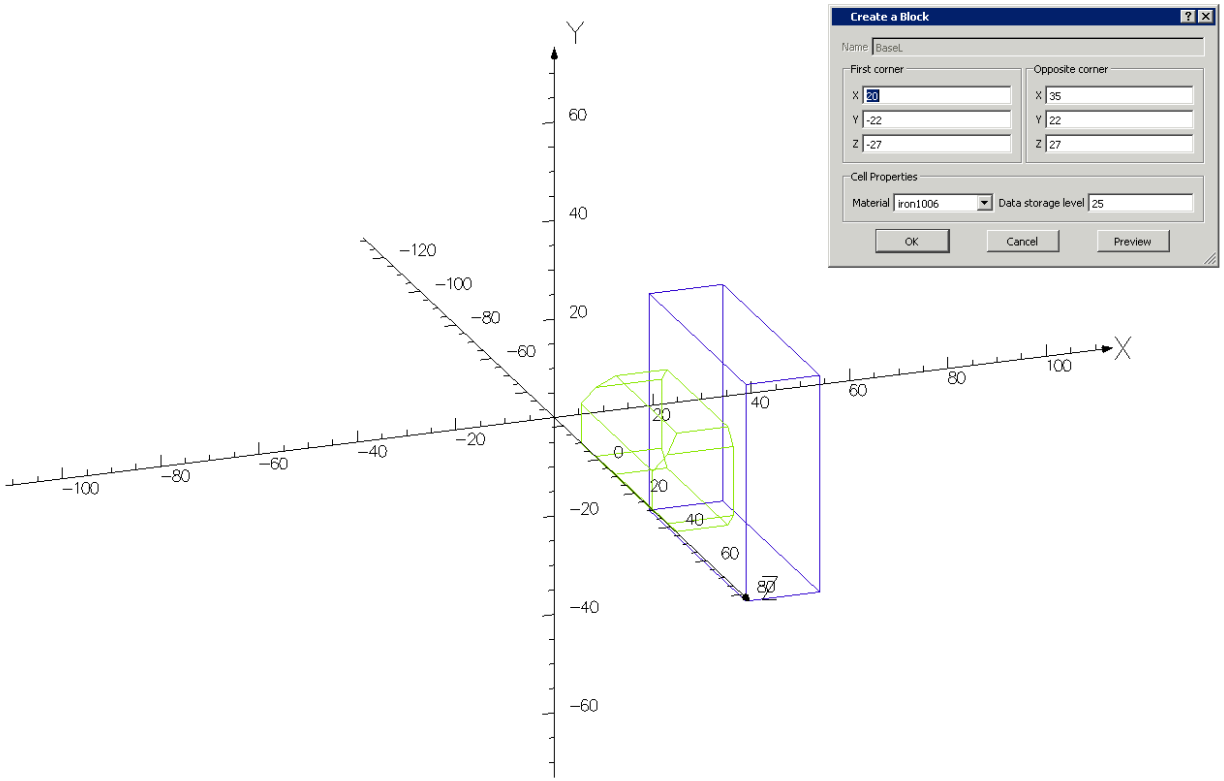

M2_Box_F_Side-plate.png shows the dimensions of the magnet side plate

Magnet-2

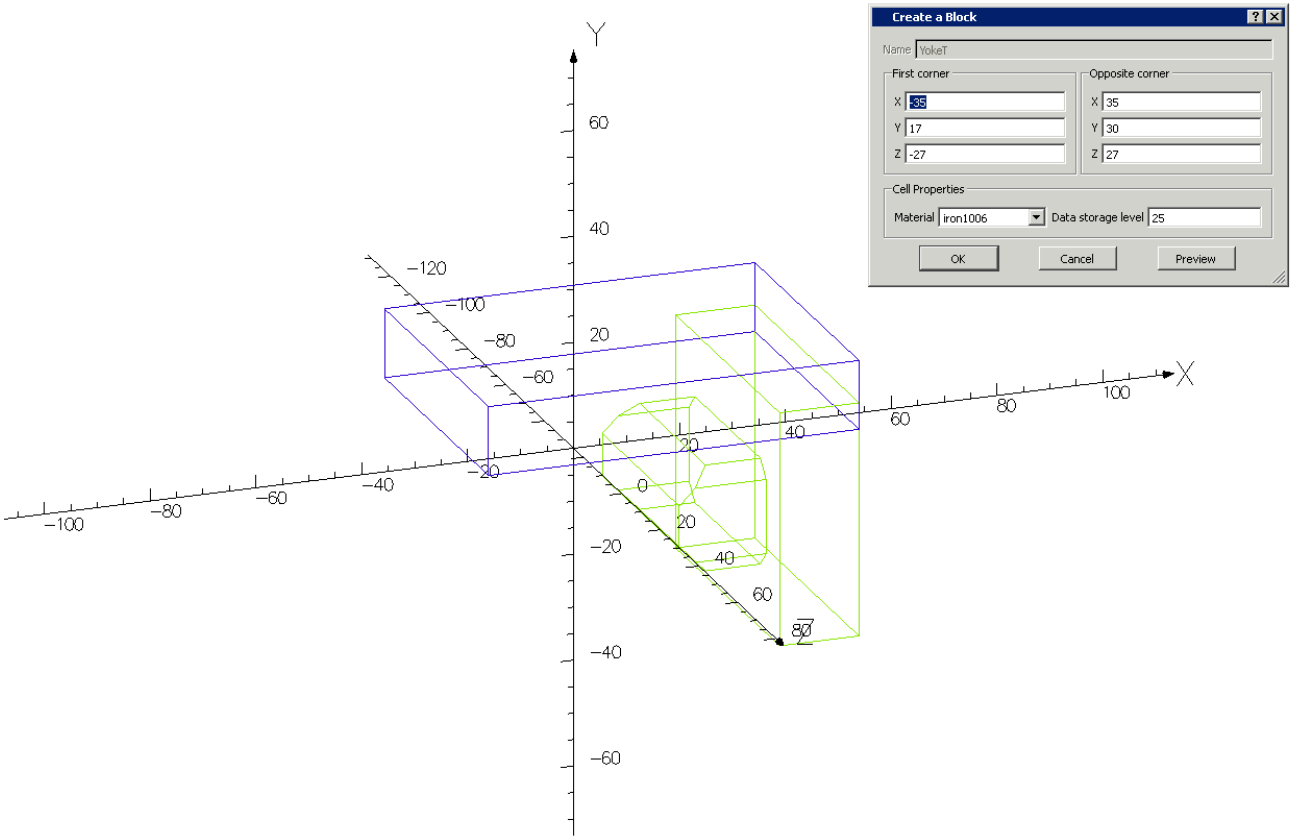

M2_Box_F_Top-plate.png shows the dimensions of the magnet top plate

Coil-1

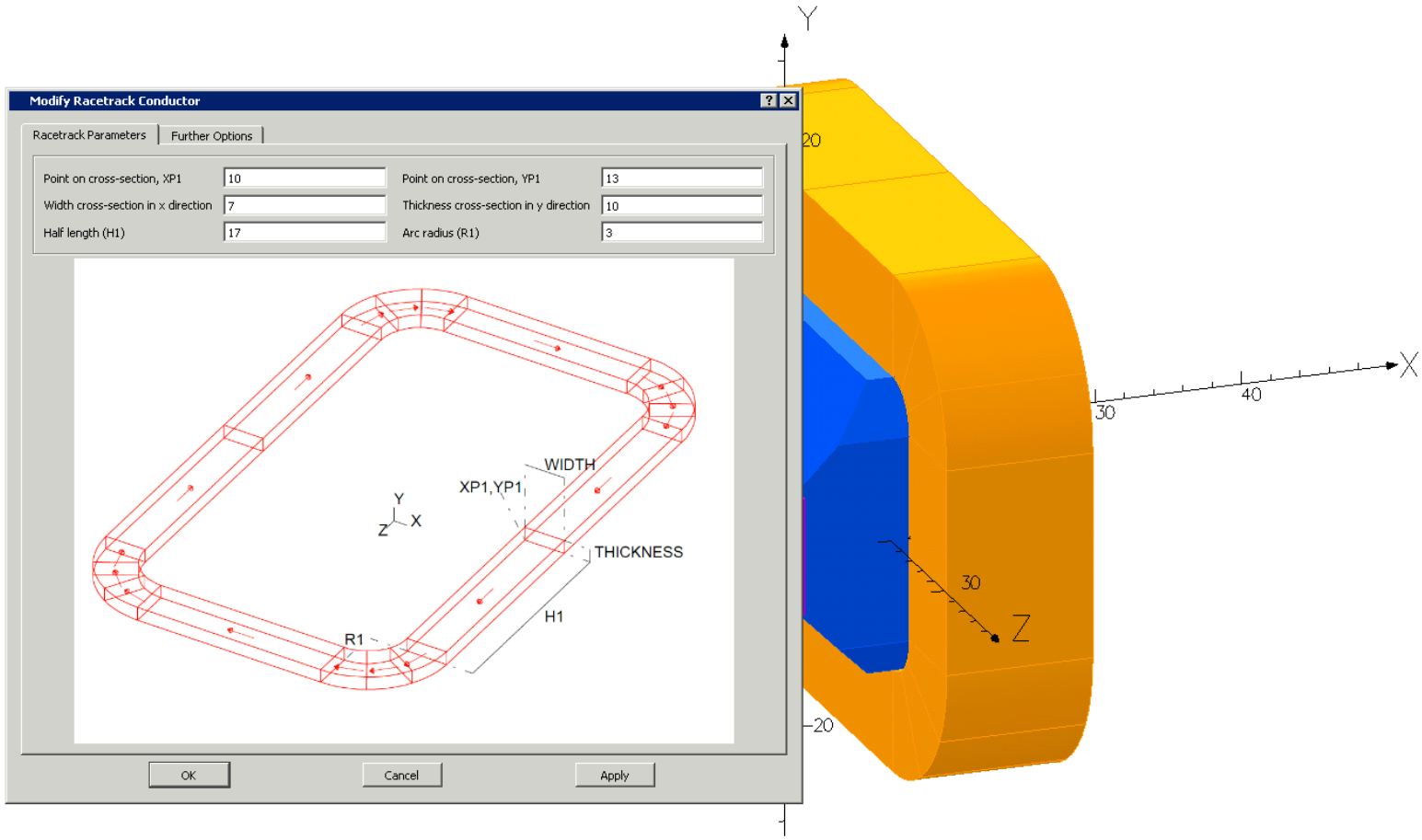

M2_Coil_dimensions.png shows the dimensions of the magnet coil

Drawings 1

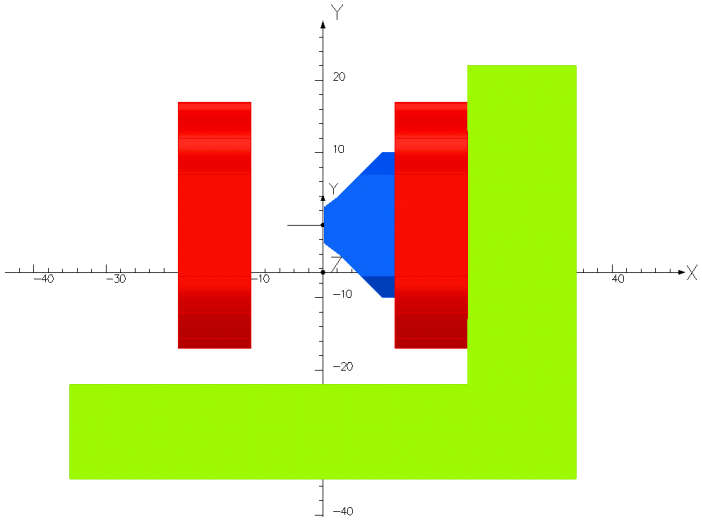
Y
20
10
Y
Z
−40
−30
−10
40
X
−10
−20
−40

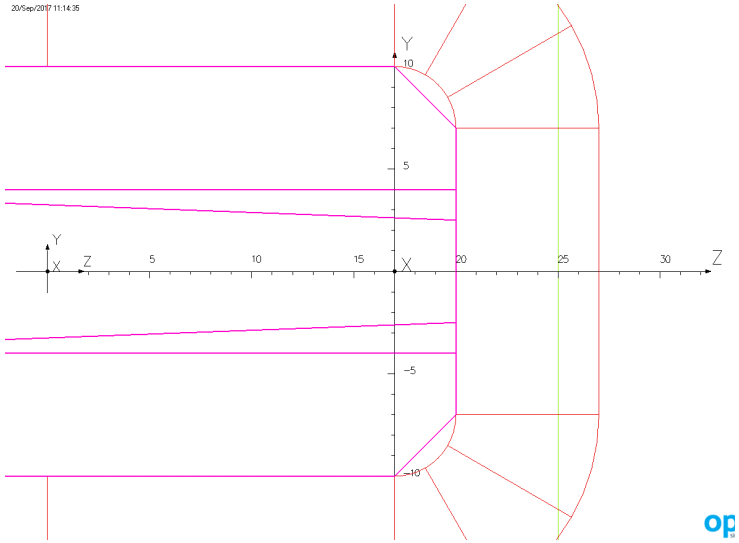
20/Sep/2017 11:14:35
Y
10
5
Y
X
Z
5
10
15
X
20
25
30
Z
−5
−10

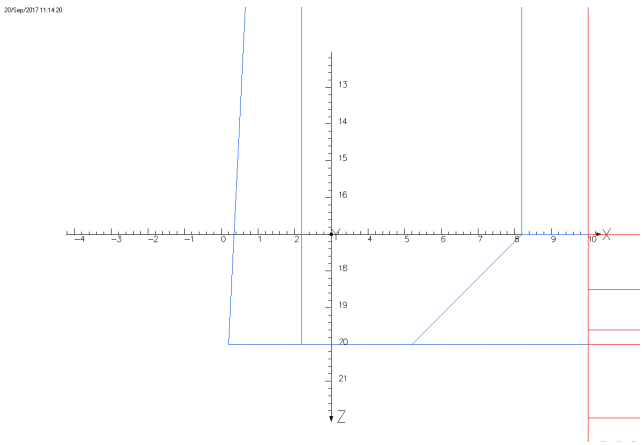
20/Sep/2017 11:14:20
13
14
15
16
−4
−3
−2
−1
0
1
2
4
5
6
7
8
9
10
X
18
19
20
21
Z

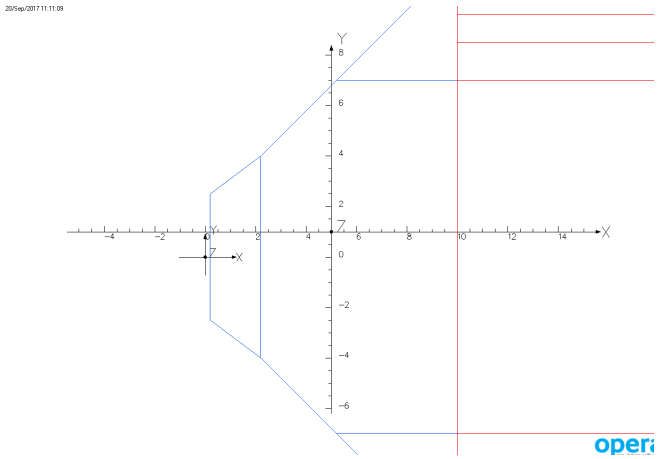
20/Sep/2017 11:11:09
Y
8
6
4
2
Z
−4
−2
2
4
6
8
10
12
14
X
Z
X
0
−2
−4
−6

Drawings 2