# Compact Photon Source

updates for 12/19/2017

B. Wojtsekhowski for the collaboration

# Current model of γ-Source

Distance to target ~200 cm
photon beam diameter on target ~0.9 mm

3 mm x 3 mm hole

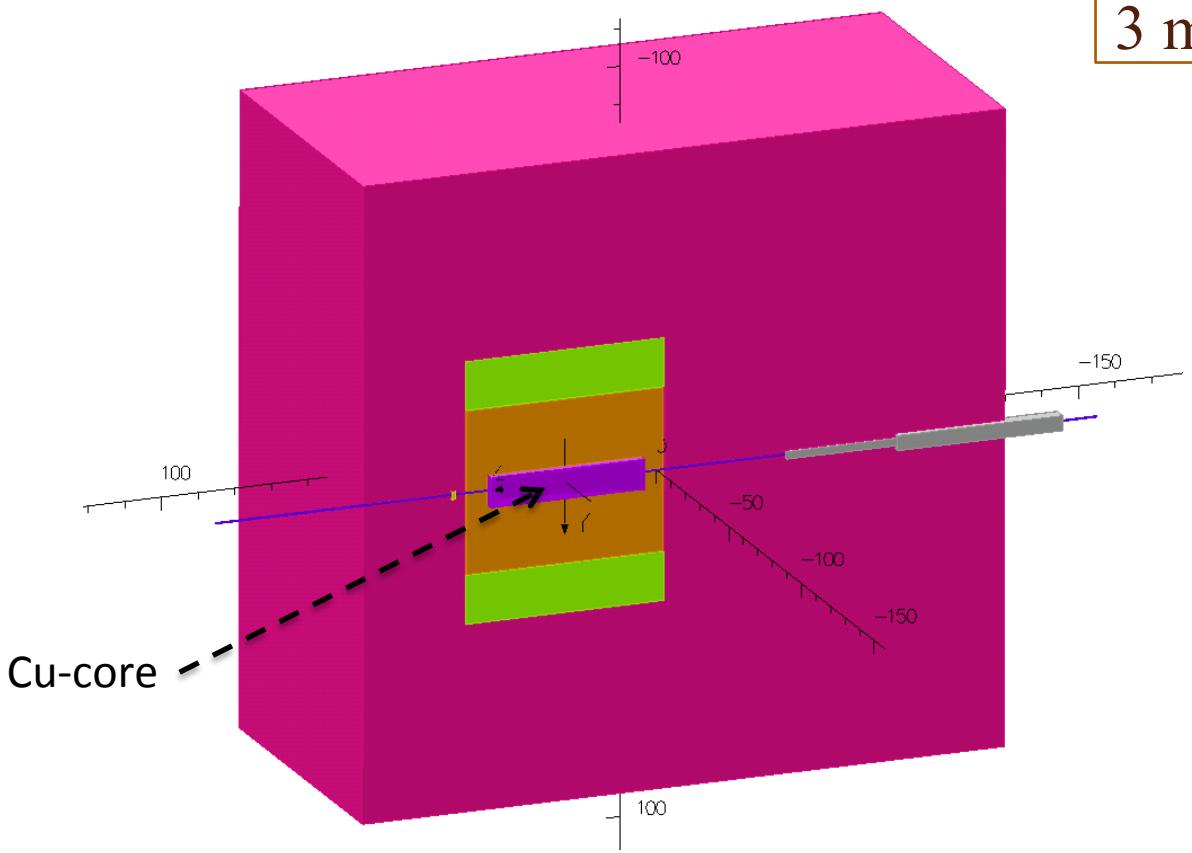

# New developments

the list from our previous meeting

1. The raster is 2 mm x 2 mm (requires pol. target rotation)
2. The magnet pole is shaped to boost the B field to 3.2 T -> length reduction which allows a longer front shield and a wedged absorber.
3. The central absorber of Cu has 1.9 x better heat conductivity, 4.2 x longer radiation length than the W-Cu (20%) alloy.
4. W-powder external shield (16 g/cm$^3$ density) for better shielding.
5. Gradual "stepped" opening of the beam line for rad. leak reduction
6. Shielding requirement logic: The radiation from the source should be a few times lower than that from the photon beam interaction with the material of a polarized target.

# Considerations for a 6-point list

**6.** Projected radiation in the hall due to a photon beam and target interaction

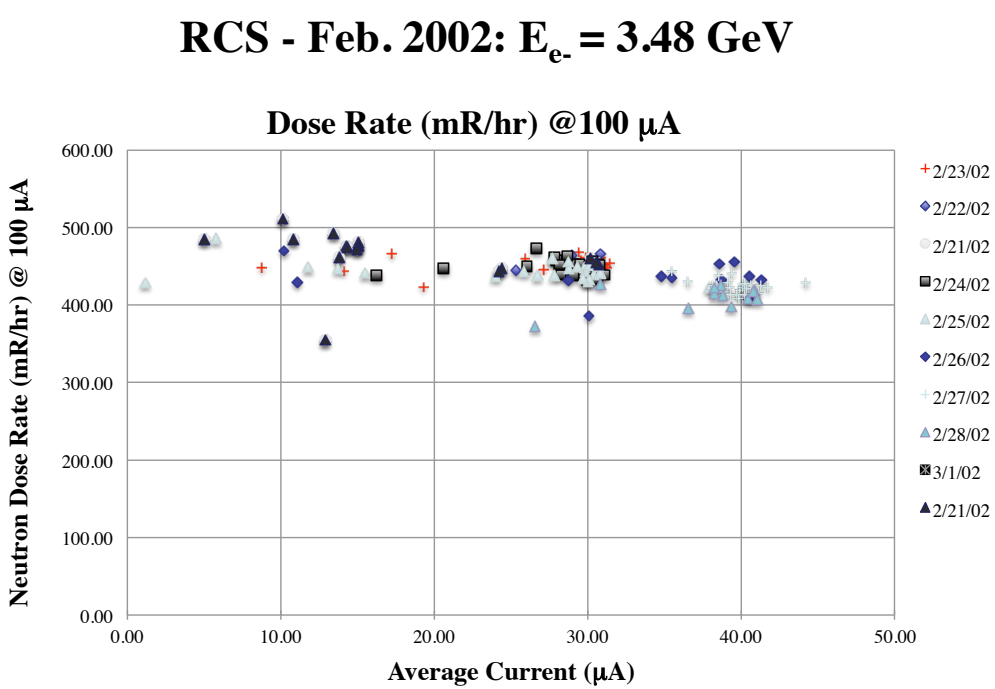


Radiation monitor ~ 15 m from the target in 120 deg. direction

From this 4 mrem/h/μA for
1) effective target - 1.7 g/cm$^2$
2) effective radiator – 7%

projected level for WACS for
1) target – 3 g/cm$^2$
2) radiator 10%

is 10 mrem/h/μA at 15 m
or at 2 m from target ~
500 mrem/h/μA =>
**total 1.5 rem/h**

The shielding factor of CPS needs to be 1000 to keep CPS contribution of 1/3 comp. unavoidable 1.5 rem/h

# Geant4 model (GEMC framework)

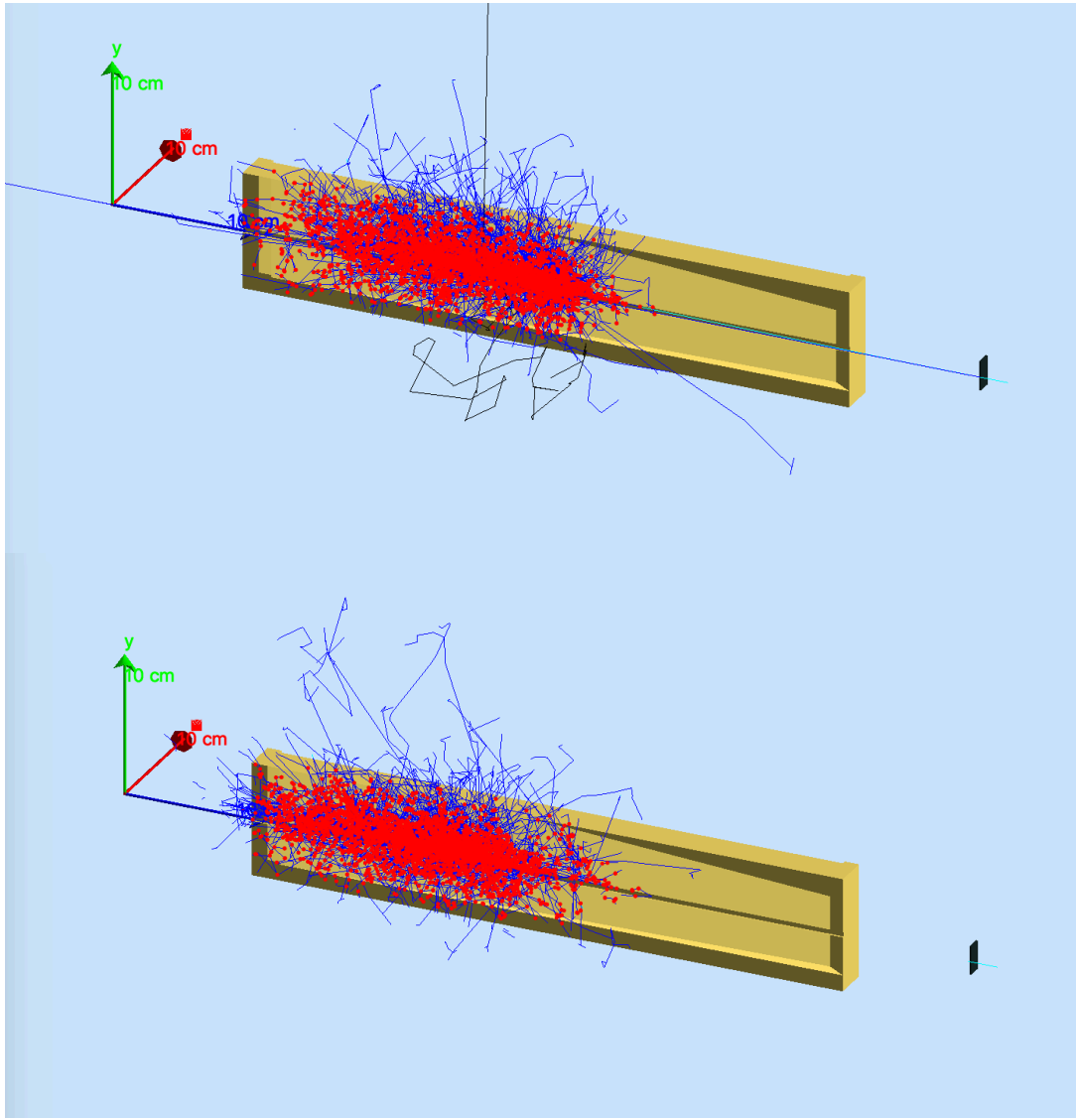


11 GeV e-
and a photon

11 GeV e-
Yv = -1 mm

# CPS model in GEMC

1. Done: the "source" test:

The neutron, proton and photon yields from 10 mm Carbon target irradiated with a 12 GeV electron beam were calculated using GEMC.

The DINREG results were obtained from the 15-year old Pavel's plots.

Results are in agreement within 10-15% for the 1-100 MeV energy range.

2. Done: The neutron yield/energy spectra from CPS magnet was calculated:

The soft (0.2 MeV) neutrons are dominate before the outer shield => potential for CH2

3. Ideas for optimization of the Outer shield:

a) The top part of the shield must heavy to keep hard neutrons inside.
The top could be separated from the CPS proper (low activation) for easy installation.

a) CH2 between the magnet and outer shield will be explored.

4) Large statistics run with GEMC requires new development, logic of biasing

# The neutron shielding

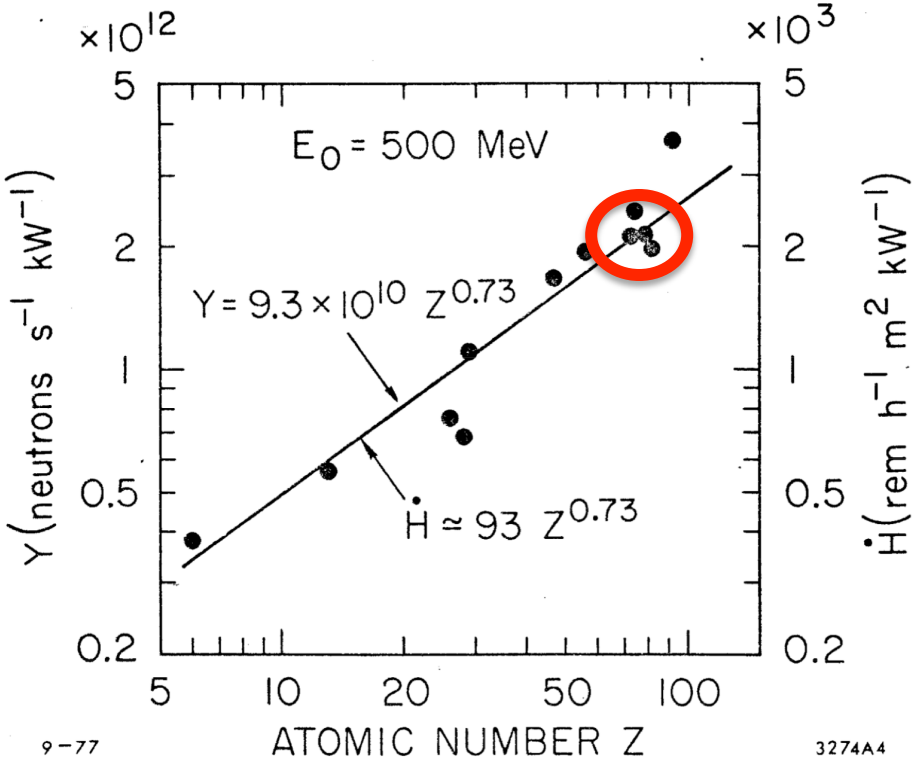


$2 \times 10^{12}$ n/kW x 10 kW = $2 \times 10^{13}$ n/s

1 millirem = 27,000 n/cm$^2$ (T= 1 MeV)

< 3 rem/hour during beam ON at 2 meters is required for the target magnet

a shielding factor needs to be ~ $1 \times 10^3$

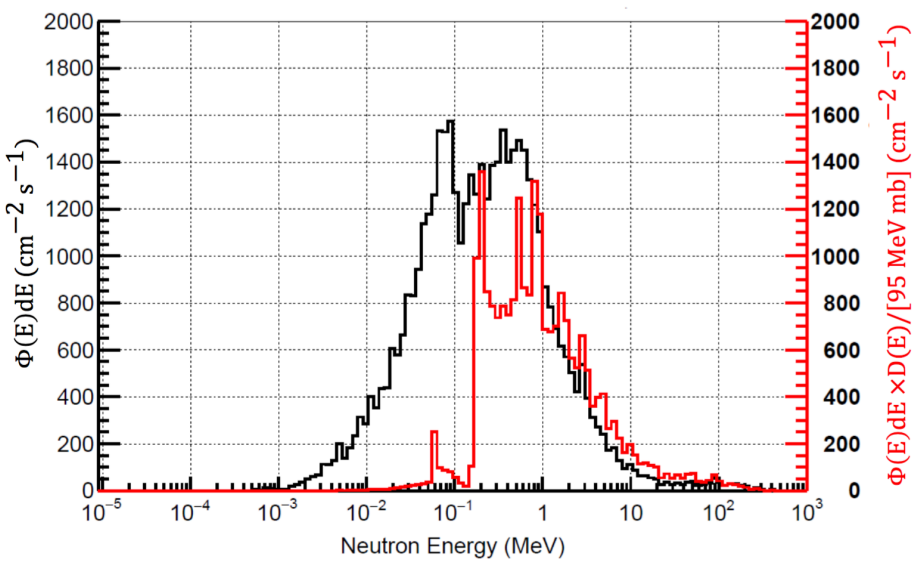

# Geant4 model (GEMC framework)

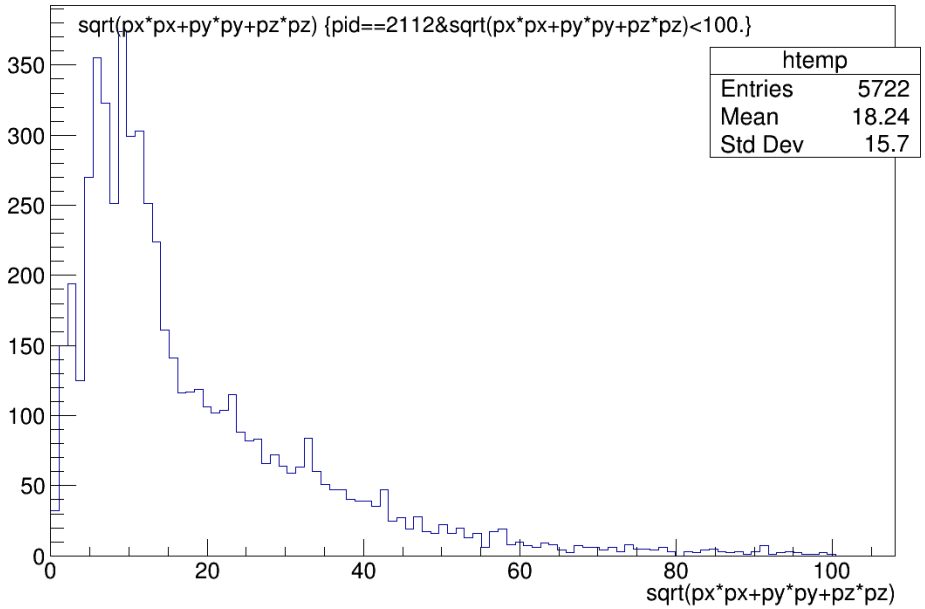


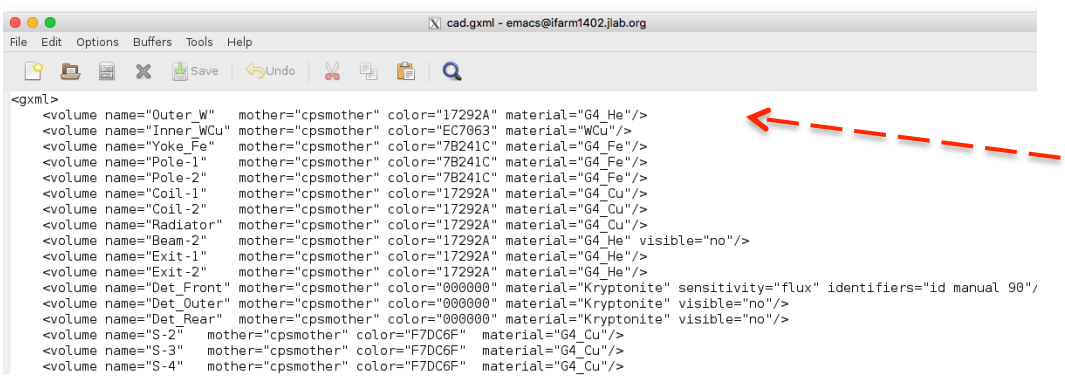


```
<gxml>
    <volume name="Outer_W"   mother="cpsmother" color="17292A" material="G4_He"/>
    <volume name="Inner_WCu" mother="cpsmother" color="EC7063" material="WCu"/>
    <volume name="Yoke_Fe"   mother="cpsmother" color="7B241C" material="G4_Fe"/>
    <volume name="Pole-1"    mother="cpsmother" color="7B241C" material="G4_Fe"/>
    <volume name="Pole-2"    mother="cpsmother" color="7B241C" material="G4_Fe"/>
    <volume name="Coil-1"    mother="cpsmother" color="17292A" material="G4_Cu"/>
    <volume name="Coil-2"    mother="cpsmother" color="17292A" material="G4_Cu"/>
    <volume name="Radiator"  mother="cpsmother" color="17292A" material="G4_Cu"/>
    <volume name="Beam-2"    mother="cpsmother" color="17292A" material="G4_He" visible="no"/>
    <volume name="Exit-1"    mother="cpsmother" color="17292A" material="G4_He"/>
    <volume name="Exit-2"    mother="cpsmother" color="17292A" material="G4_He"/>
    <volume name="Det_Front" mother="cpsmother" color="000000" material="Kryptonite" sensitivity="flux" identifiers="id manual 90"/
    <volume name="Det_Outer" mother="cpsmother" color="000000" material="Kryptonite" visible="no"/>
    <volume name="Det_Rear"  mother="cpsmother" color="000000" material="Kryptonite" visible="no"/>
    <volume name="S-2"   mother="cpsmother" color="F7DC6F"  material="G4_Cu"/>
    <volume name="S-3"   mother="cpsmother" color="F7DC6F"  material="G4_Cu"/>
    <volume name="S-4"   mother="cpsmother" color="F7DC6F"  material="G4_Cu"/>
```

First results for prompt radiation:

6k n/ 250k $e^-$ in full 4pi solid angle

4 x $10^{11}$ n/s are leaving CPS magnet

190 rem/h at distance 1.5 meters

or 1.9 rem/h at 15 meters

without the Outer W shielding

# Potential experimental program with the Compact Photon Source

1. Polarized $NH_3$ target – TCS: $H(\gamma, e^+e^- p)$
2. Polarized $NH_3$ target – exclusive pion: $H(\gamma, \pi\, p)$, $H(\gamma, \pi^+ n)$
   Pion photo-production mechanism in GeV energy range

3. Polarized $NH_3$ target – phi-proton spin-spin: $H(\gamma, K^+K^- p)$
4. $K_L$ secondary beam for use in Hall D experiments
5. Polarized $ND_3$ target – $D(\gamma, p\, n)$ in high energy regime
6. Mirror nuclei $T/^3He$: Test difference of $(\gamma, pn)$ yields
7. SRC in photo-induced disintegration: pn, pd, nd, … final states

# The test of a handbag mechanism in exclusive photon-proton reaction

$A_{LL}$ or $K_{LL}$ – does not matter, we need just better data to constrain the GPD models

However, we can test of the handbag dominance more using the result: $A_{LL} = K_{LL}$

In reality, the WACS $K_{LL}$ data has a modest accuracy ~ 0.09

| Selection | $K_{LL}$ | $K_{LS}$ |
|---|---|---|
| $\mathrm{WACS}_{\text{this experiment}}$ | $0.645 \pm 0.059 \pm 0.048$ | $-0.089 \pm 0.059 \pm 0.040$ |
| $\mathrm{WACS}_{\mathrm{E99-114}}$ | $0.678 \pm 0.083 \pm 0.04$ | $0.114 \pm 0.078 \pm 0.04$ |
| $\mathrm{Pion}_{\text{this experiment}}$ | $-0.082 \pm 0.007$ | $-0.296 \pm 0.007$ |
| $\mathrm{Pion}_{\mathrm{E99-114}}$ | $0.532 \pm 0.006$ | $0.480 \pm 0.006$ |

- A new suggestion: a test of $A_{LL} = K_{LL}$ prediction in the pion photo production need 1% accuracy for $A_{LL}$

Last week comment from Peter Kroll:
Twist-3 would be important for ALL in pion photo-production process

Dear Bogdan,

you asked me whether the observables ALL, KLL, ALS and
KLS for photoproduction of pions tell us also something
about the handbag approach, not only the WACS observables.

I presently checking this in detail; as for electroproduction
of pions the twist-3 contribution (which goes along with
the transversity GPDs) may also play an important
role for photoproduction. In any case we made already
attempts in our 2003 paper (signatures...) to check that.
However, as it turned out the contributions from the asymptotic
forms of the pion twist-3 distribution amplitudes canceled
exactly. Since in 2003 we did not know that the twist-3
contribution is the dominant one in electroproduction
of pions we gave up this idea.

However, the situation has changed - we now know that twist-3
is an important contribution in electroproduction and
it seems plausible that this is also the case for photoproduction.
We will see what I can do with it.
By the way twist-3 does not contribute to WACS.

The WACS relations
ALL=KLL and ALS=-KLS
also hold for photoproduction at the twist-2 level.
Twist-3 contributions will change these relations.
Thus, for instance, from an experimentally observed difference
between ALL and KLL one learns about the size of the twist-3
contribution.

Best, Peter