Progress report on NPS sweep magnet, 3/10/2016 and +

B. Wojtsekhowski

Small Angle Magnet as July 2015 meeting

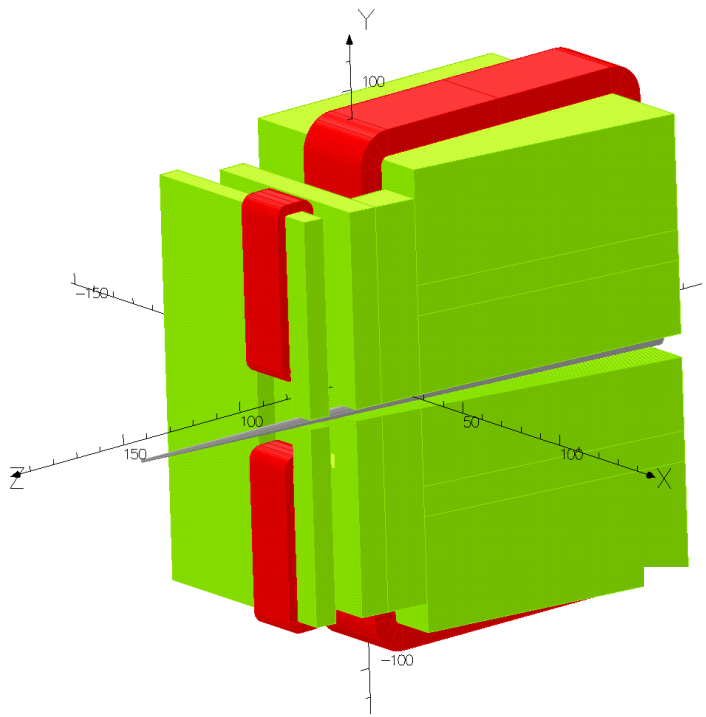

Configuration for DVCS/Pion

Minimum central angle - 6.3°
Open aperture - from 2°
Distance from the target to the magnet center - 157 cm
Aperture - 30x60 cm at distance 207 cm from the target

Bx field integral - 0.60 Tm

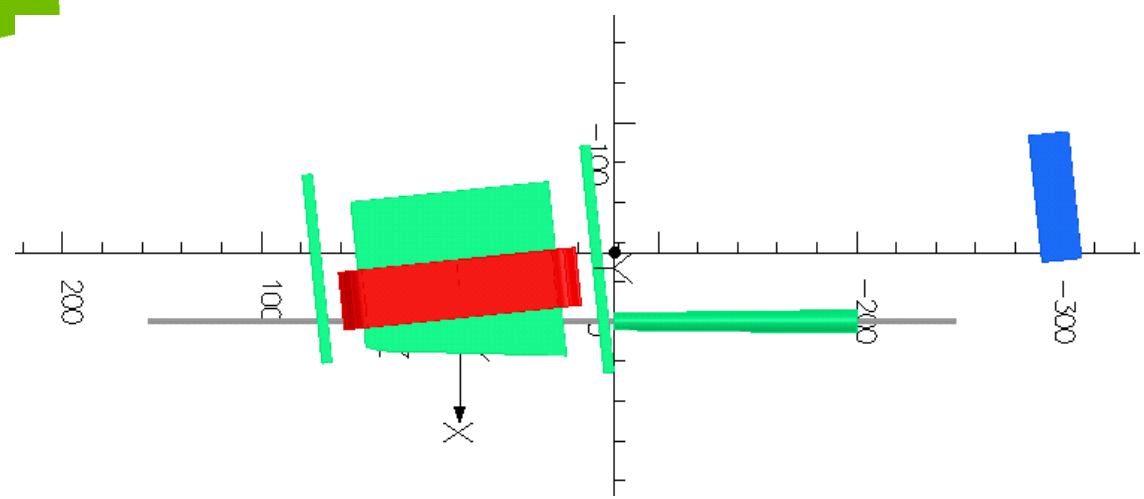

Small Angle Magnet current plan

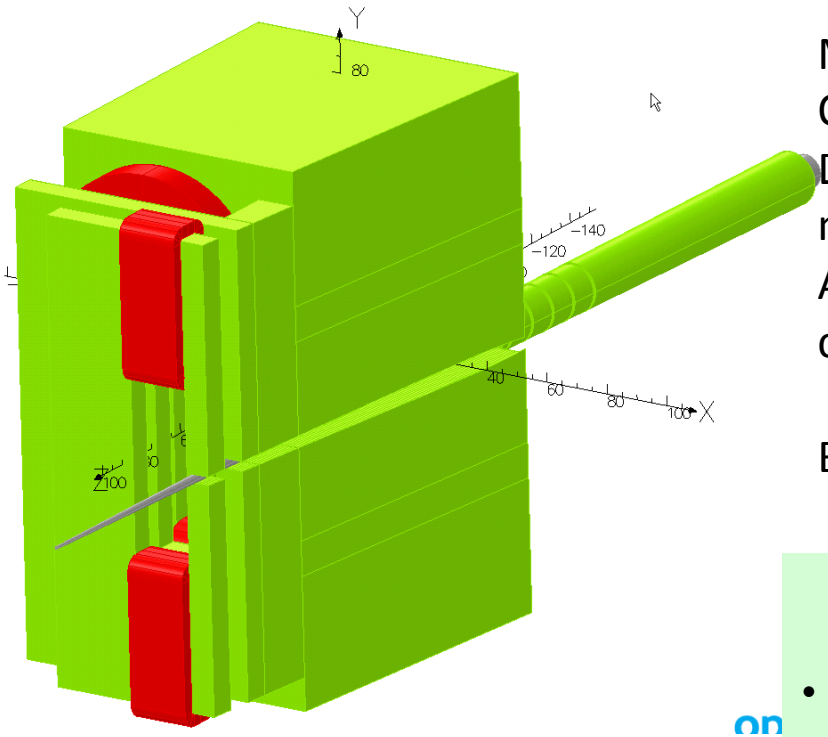

Configuration for DVCS/Pion

Minimum central angle - 6.3°
Open aperture - from 2°
Distance from the target to the magnet center - 157 cm
Aperture - 30x60 cm at distance 207 cm from the target

Bx field integral - 0.60 Tm

Advantages of the saddle coil:

- Four times reduced fringe field
- Field integral 0.6 Tm without extra iron
- Simpler mounting of the magnet

Small Angle Magnet 3D views

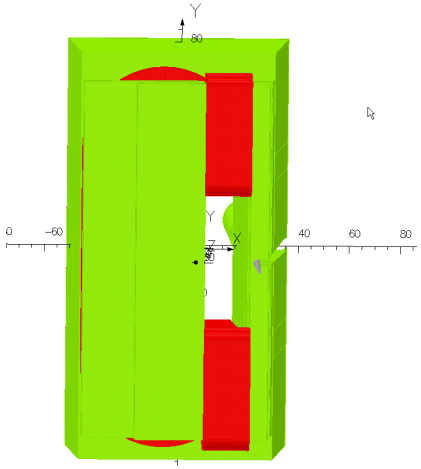

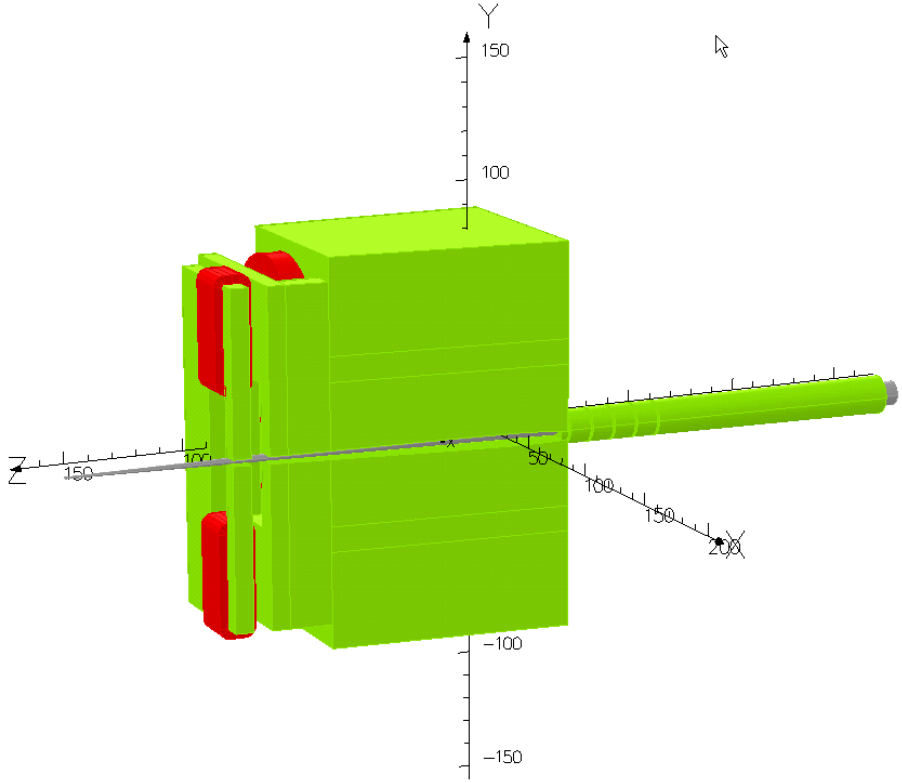

there is no a rear field clamp
there is a passive magnetic shield for beam line

Small Angle Magnet main coils

Quotation from Buckley Systems

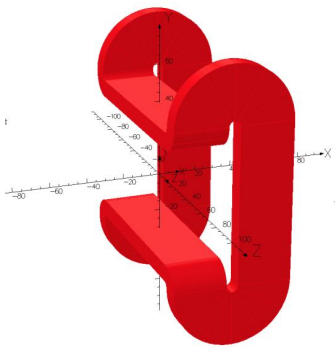

Option 1

$42K

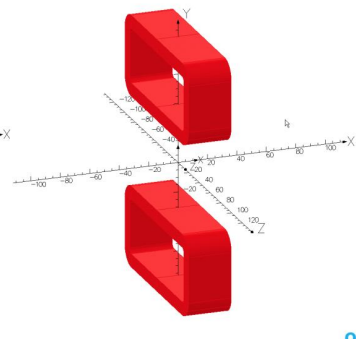

Option 2

$24K

Option 1

1	1	Saddle Coil	2022A0000	A	$12,620	$12,620
2	1	Saddle Coil winding former	2022J0000	A	$10,260	$10,260
3	1	Saddle coil canning mould	2022J0010	A	$10,100	$10,100
4	1	Design and drafting of coil	2022A0000	A	$3,860	$3,860
5	1	Design and drafting of coil tooling	2022J0000	A	$4,820	$4,820
					Total	**$41,660**

Option 2

6	2	Racetrack Coil	2022A1000	A	$6,230	$12,460
7	1	Racetrack winding former	2022J1000	A	$3,120	$3,120
8	1	Racetrack canning former	2022J1010	A	$2,020	$2,020
9	1	Design and drafting of coil	2022A1000		$3,860	$3,860
10	1	Design and drafting of coil tooling	2022J1000		$2,890	$2,890
					Total	**$24,350**

Beam line field and trajectories

Bx component on the beam line and along the ray to the center of the calorimeter, G

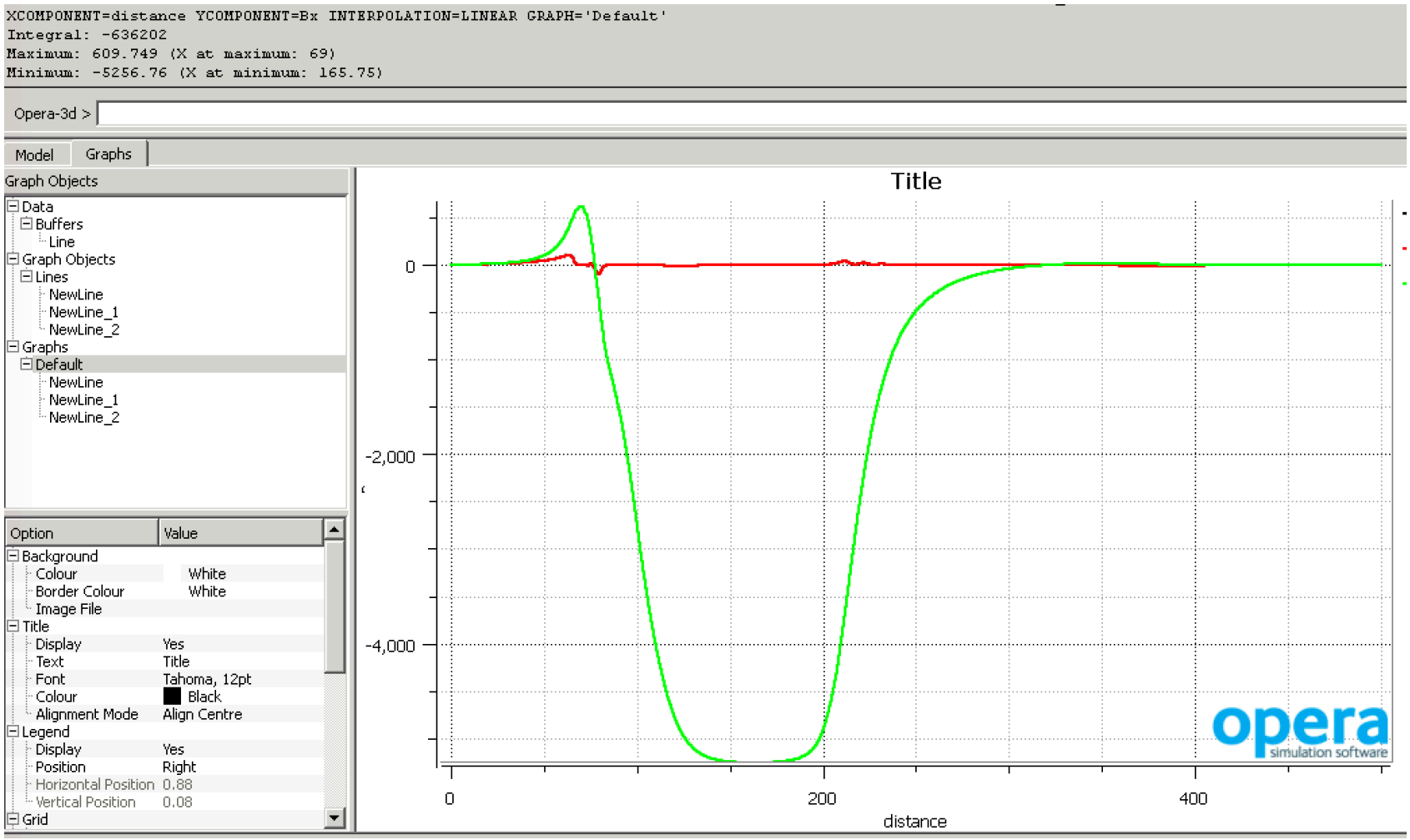

Beam line field and trajectories

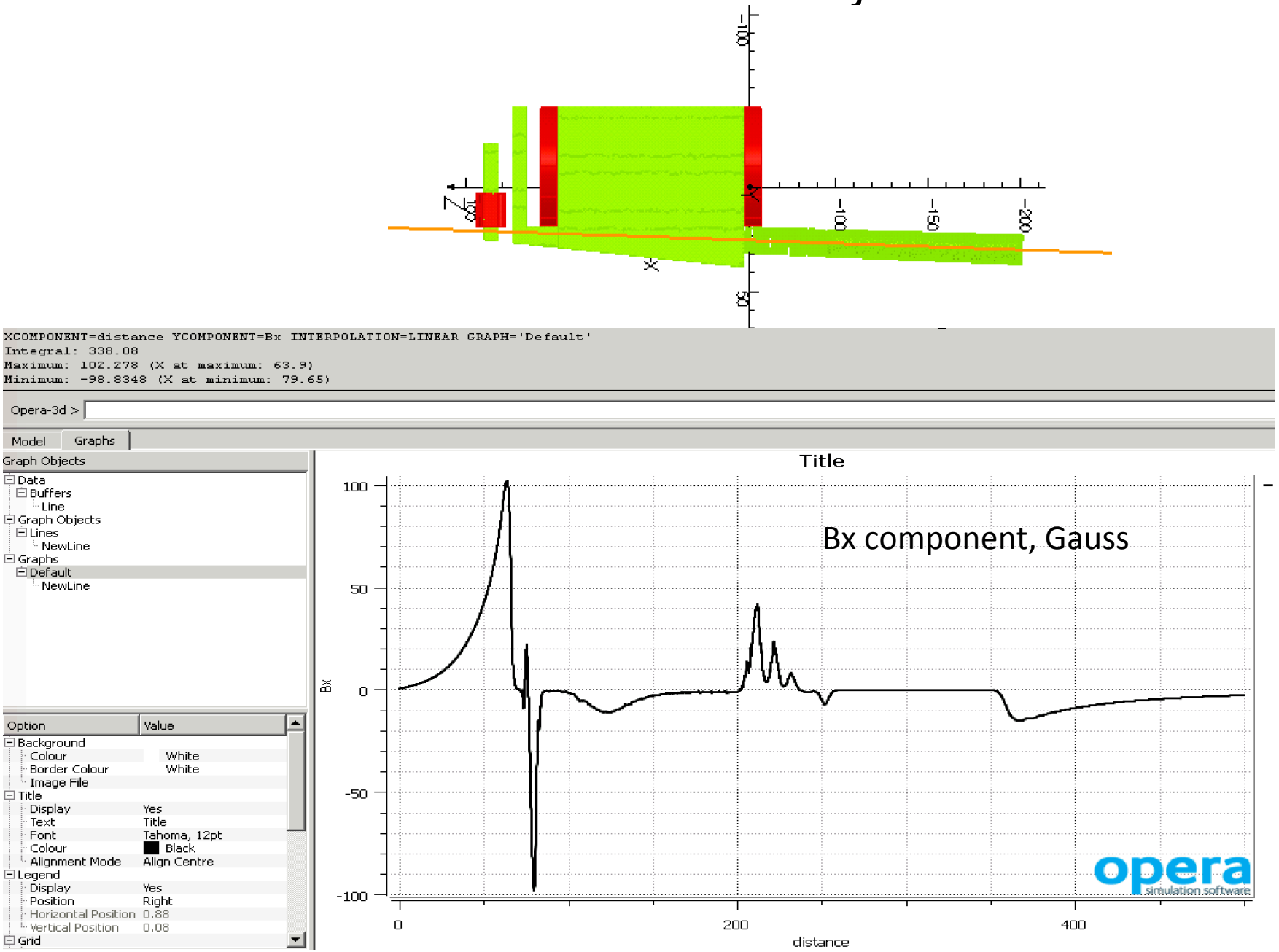

Beam line field and trajectories

10 MeV electron trajectory from the target

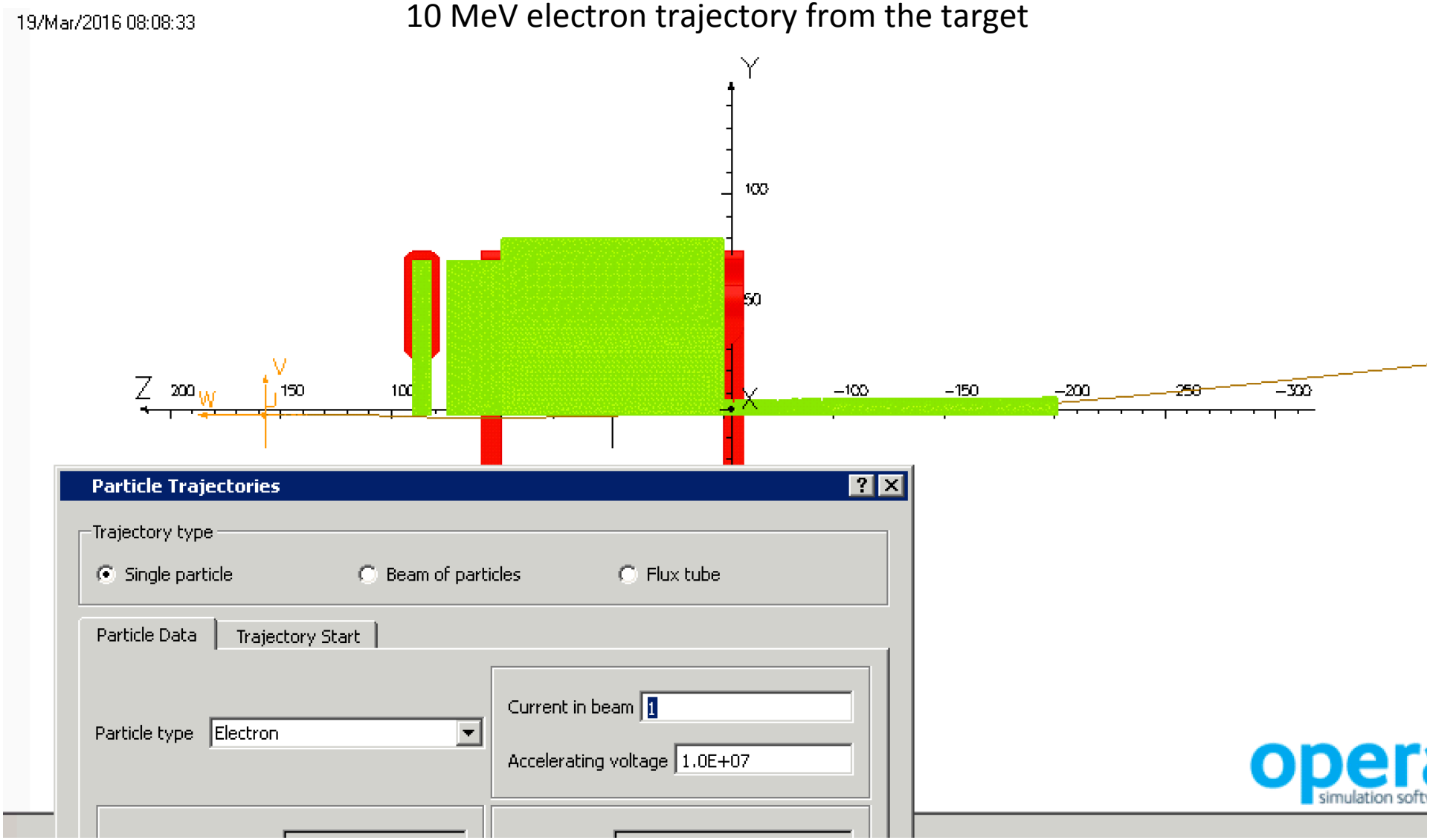

Beam line field and trajectories

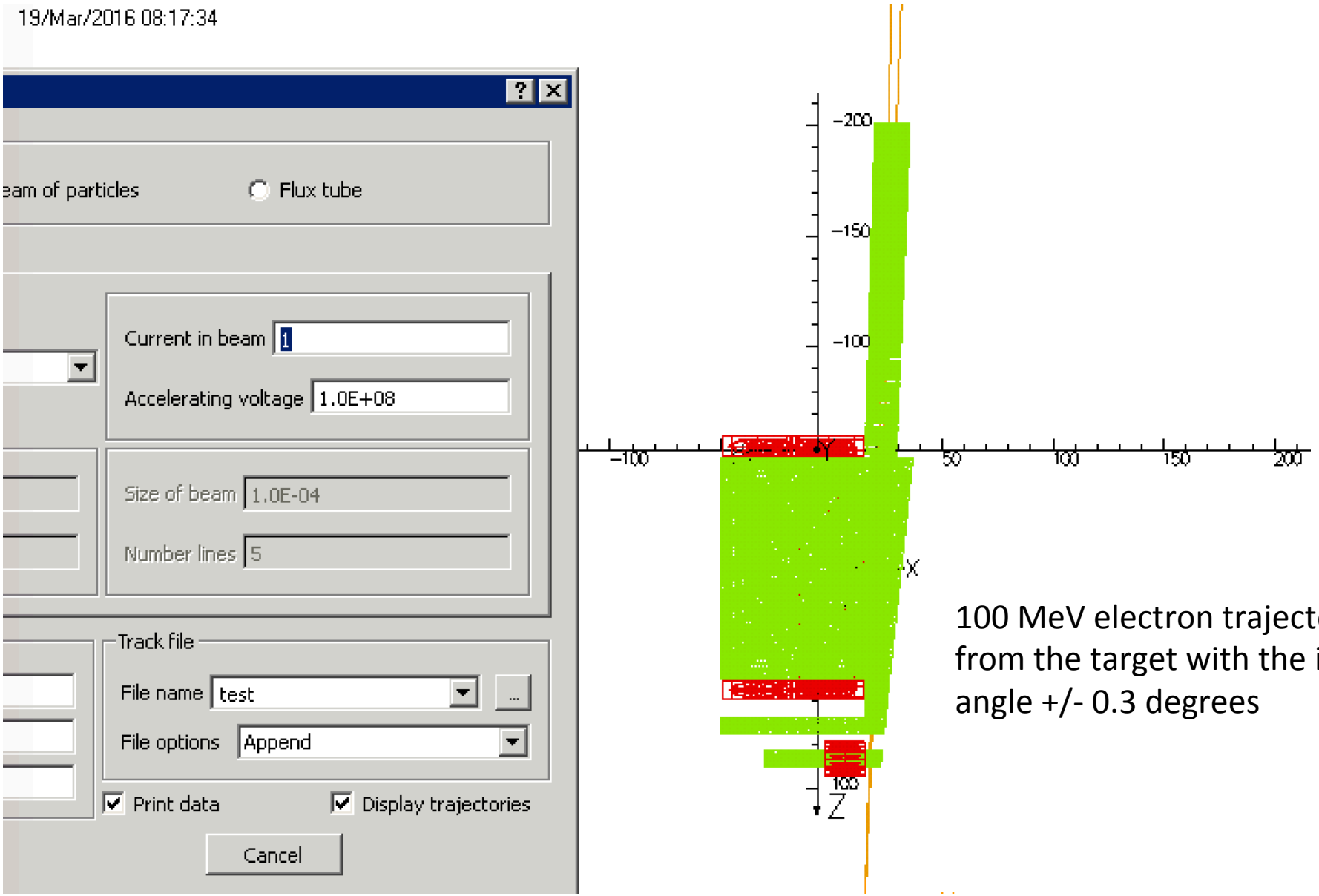

100 MeV electron trajectories from the target with the initial angle +/- 0.3 degrees

Beam line radiation issue

Estimate of of the radiation:

$$Power = P_{beam} \times t_{target} \times \frac{E_{min}}{E_{beam}}$$

$$= 10\,kW \times 0.01 \times 0.01 = 1\,W$$

Trajectory with momentum as low as 100 MeV is going to the dump

The power deposition in the hall for 1 uA 11 GeV beam is about 1W.

Saddle coil design progress

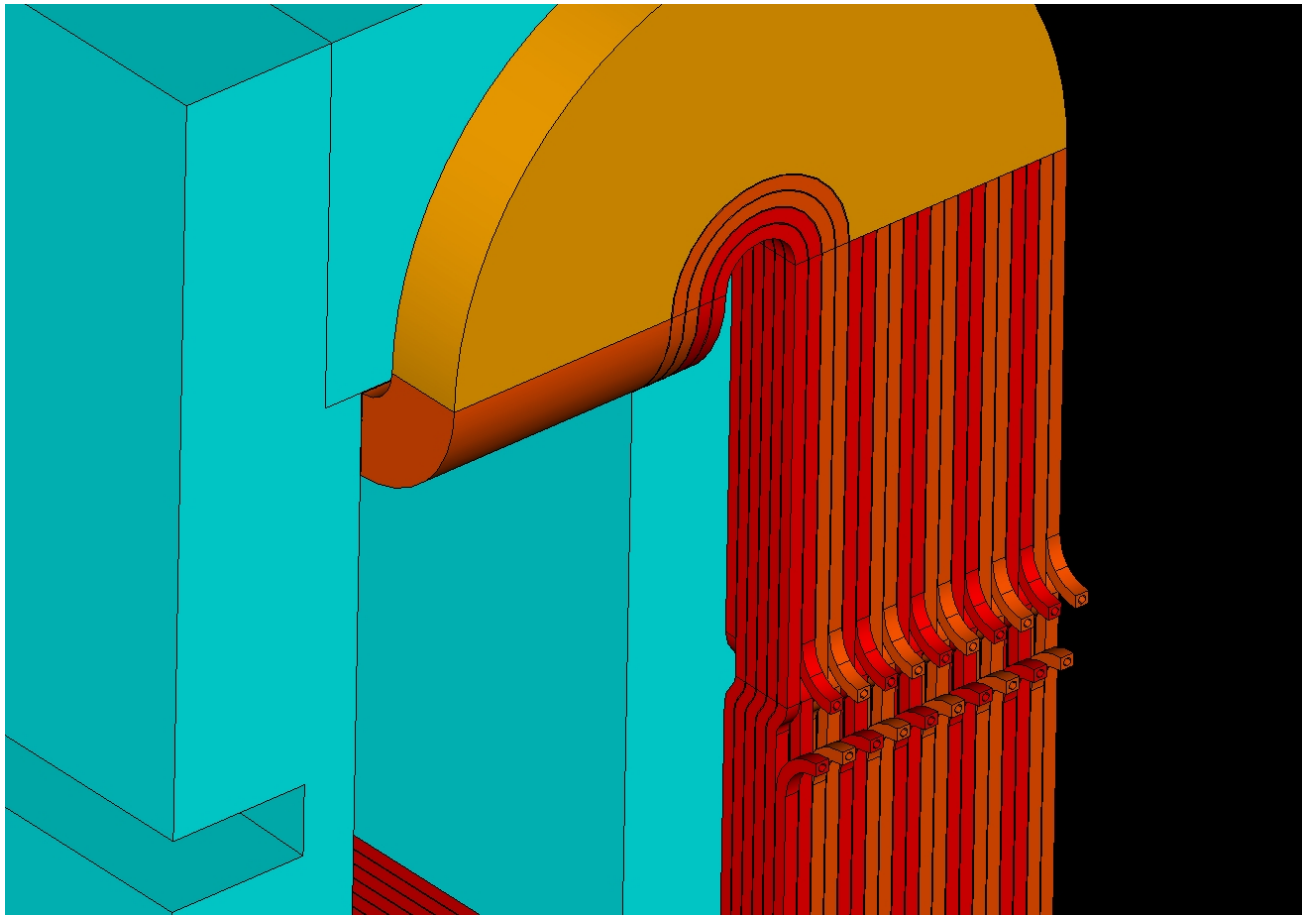

Coil made of
6 x 20 conductors

Current 1070 Amp

Cooling loop 6 x 2

Vertical field magnet analysis

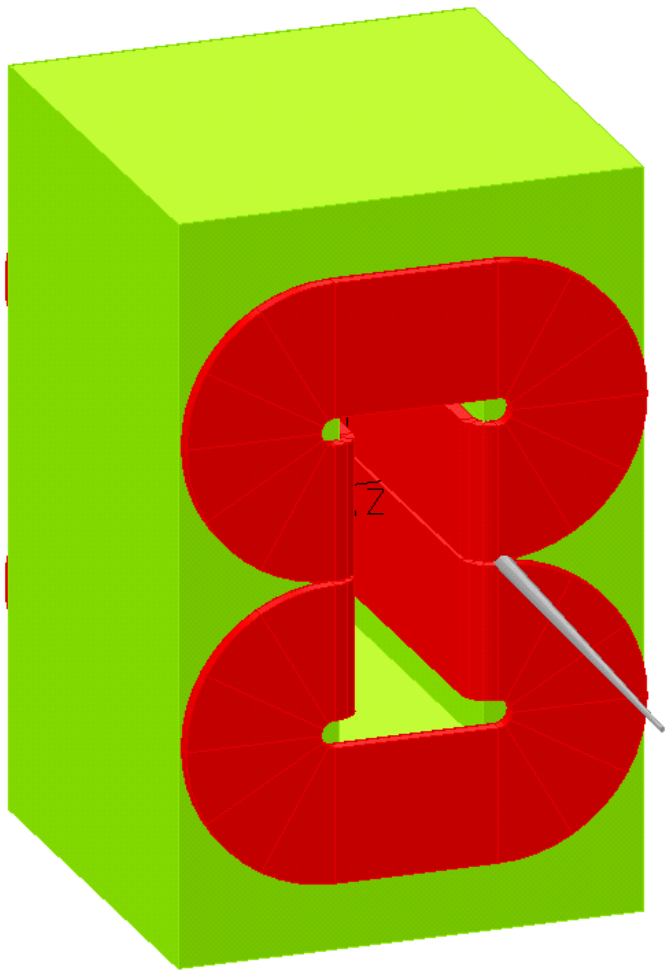

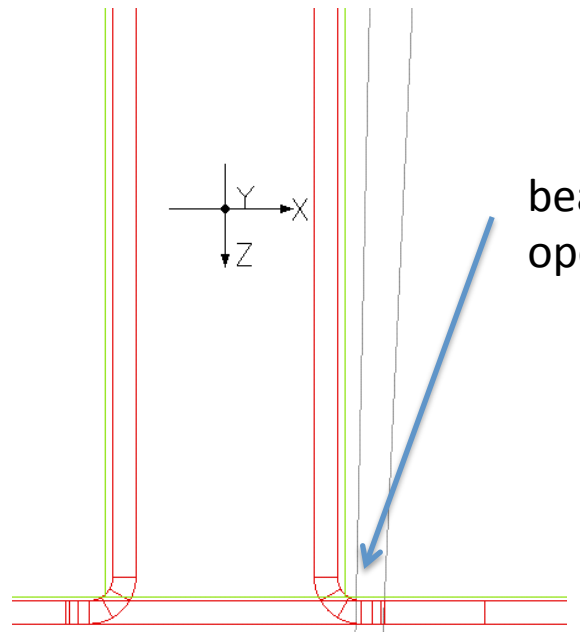

beam line opening

Top view shows the problem of space allocation for the coil, the iron shield and the beam line opening