Compton polarimetry for EIC

EIC users meeting 2018 at CUA
Detectors, Computing, and New Technologies
Alexandre Camsonne
July 31st 2018

eRHIC

pCDR eRHIC Design Concept

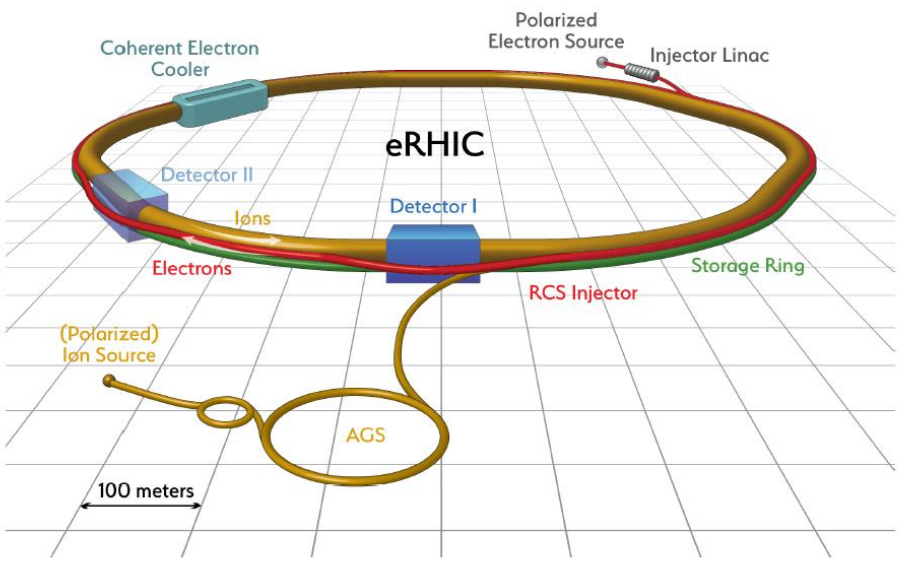

- **Hadron Beam**
  - entirely re-uses injection chain and one of RHIC rings (Yellow ring)
  - partially re-uses components of other ion RHIC ring
- **Electron Accelerator** added inside the existing RHIC tunnel:
  - 5-18 GeV Storage Ring
  - On-energy injector: 18 GeV Rapid Cycling Synchrotron
  - Polarized electron source and 400 MeV injector linac: 10nC, 1 Hz
- **Hadron cooling system** required for $L = 10^{34} cm^{-2} s^{-1}$
  Without cooling the peak luminosity reaches 4.4 $10^{33} cm^{-2} s^{-1}$

eRHIC beam parameters

Beam Parameters for 275(p)x10(e) GeV

	Nominal Design (with cooling)			Risk Mitigation (no cooling)	
Species	**p**	**e**		**p**	**E**
Bunch frequency [MHz]	112.6			56.3	
Bunch intensity [10^11]	0.6	1.5		1.05	3.0
Number of bunches	1320			660	
Beam current [A]	1	2.5		0.87	2.5
Rms norm. emit. h/v [um]	2.7/0.38	391/20		4.1/2.5	391/95
Rms emittance h/v [nm]	9.2/1.3	20/1		13.9/8.5	20/4.9
β* h/v [cm]	90/4	42/5		90/5.9	63/10.4
IP rms beam size h/v [um]	91/7.2			112/22.5	
IR rms angular spread h/v [urad]	101/179	219/143		124/380	179/216
b-b parameter (/IP) h/v	0.013/0.007	0.064/0.099		0.015/0.005	0.1/0.083
Rms bunch length [cm]	5	1.9		7	1.9
Rms energy spread, 10^-4	4.6	5.5		6.6	5.5
Max space charge parameter	0.004	neglig.		0.001	neglig.
IBS growth time tr/long, h	2.1/2.0			9.2/10.1	
Polarization, %	80	70		80	70
Hourglass and crab crossing factor	0.87			0.85	
Peak luminosity [10^33 cm-2s-1]	**10.1**			**4.4**	
Integrated luminosity/week, fb^{-1}	**4.51**			**1.12**	

Hadron cooling provides ~factor 4 integrated luminosity increase at E_{CM}=105 GeV. But larger increase, by factor 7-10, is expected in low range of E_{CM} (29-70 GeV).

JLEIC Layout: *A Ring-Ring Collider*

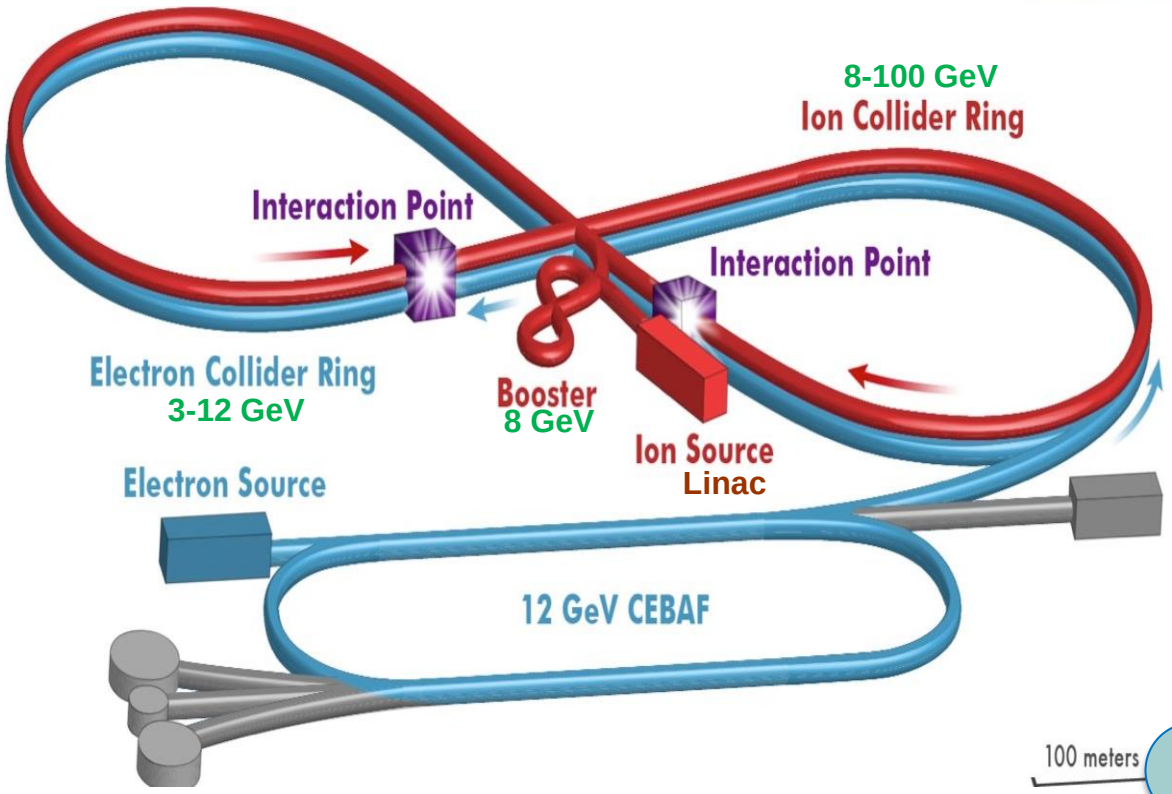

- **Electron complex**
  - CEBAF full energy injection
  - Collider ring
- **Ion complex**
  - Ion source/Linac
  - Booster (8 GeV)
  - Collider ring
- **IP/detectors**
  - Two, full acceptance
  - Hori. crab crossing
- **Polarization**
  - Figure-8 shape

Design Report

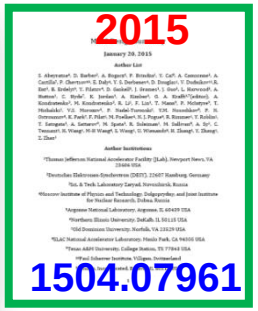

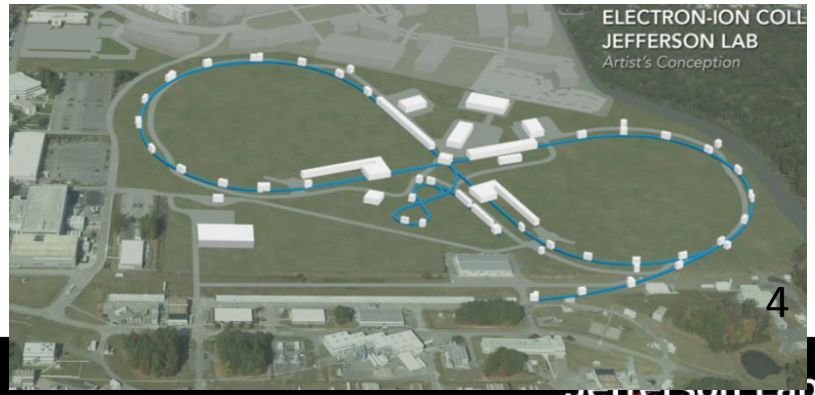

JLEIC *e-p* Parameters (pre-CDR)

CM energy	GeV	21.9 (low)		44.7 (medium)		63.3 (high)	
		p	e	p	e	p	e
Beam energy	GeV	40	3	100	5	100	10
Collision frequency	MHz	476		476		476	
Particles per bunch	10^{10}	**0.98**	3.7	**0.98**	3.7	**0.98**	0.93
Beam current	A	0.75	2.8	0.75	2.8	0.75	0.71
Polarization	%	80	80	80	80	80	75
Bunch length, RMS	cm	**3**	1	**1**	1	**1**	1
Norm. emitt., horiz./vert.	μm	**0.3/0.3**	24/24	**0.5/0.1**	54/10.8	**0.9/0.18**	432/86.4
Horizontal & vertical β*	cm	8/8	13.5/13.5	6/1.2	5.1/1	10.5/2.1	4/0.8
Vert. beam-beam param.		0.015	0.092	0.015	0.068	0.002	0.009
Laslett tune-shift		0.06	7×10^{-4}	0.055	6×10^{-4}	0.03	7×10^{-5}
Detector space, up/down	m	3.6/7	3.2/3	3.6/7	3.2/3	3.6/7	3.2/3
Hourglass(HG) reduction		1		0.87		0.86	
Luminosity/IP, w/HG, 10^{33}	$cm^{-2}s^{-1}$	**2.5**		**21.4**		**1.7**	

Similar high performance can be achieved for electron-ion (*e-A*) collisions

eRD15 : Compton electron detector R&D

- Requirement
  - 1% electron polarization measurement
  - Best measurement Compton electron detector at SLD (~0.5%)
- Deliverables
  - Simulation to determine signal to background for JLEIC baseline Roman Pot and expected accuracy

Compton asymmetry

$\sigma(\ e + \gamma \longrightarrow e' + \gamma'\ ) \neq \sigma(\ e + \gamma \longrightarrow e' + \gamma'\ )$

$$\frac{N^{+}-N^{-}}{N^{+}+N^{-}}\left(E_e, k_\gamma, k_{\gamma'}\right) = P_e * A(E_e, k_\gamma, k_{\gamma'})$$

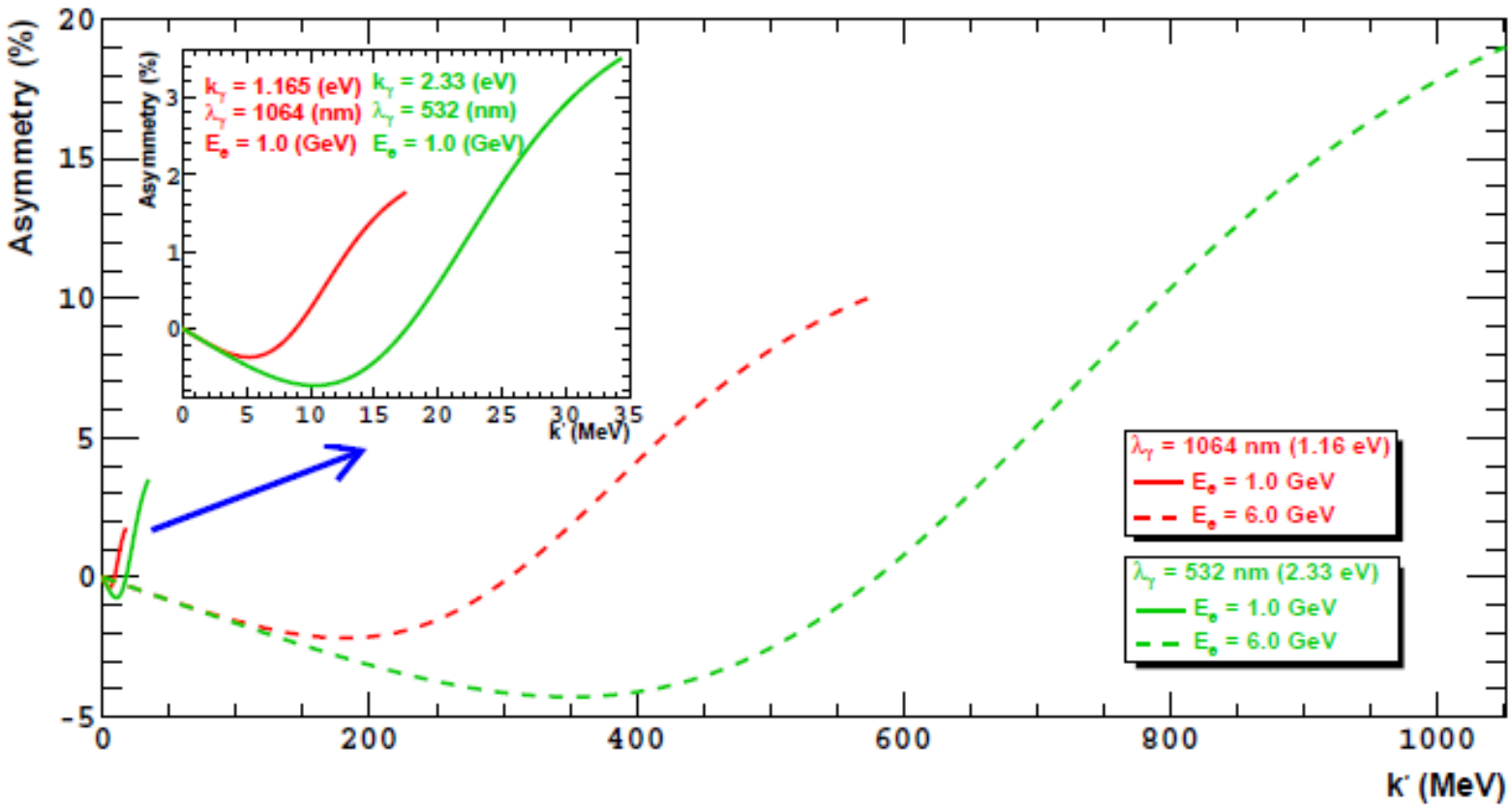

Compton electron detector

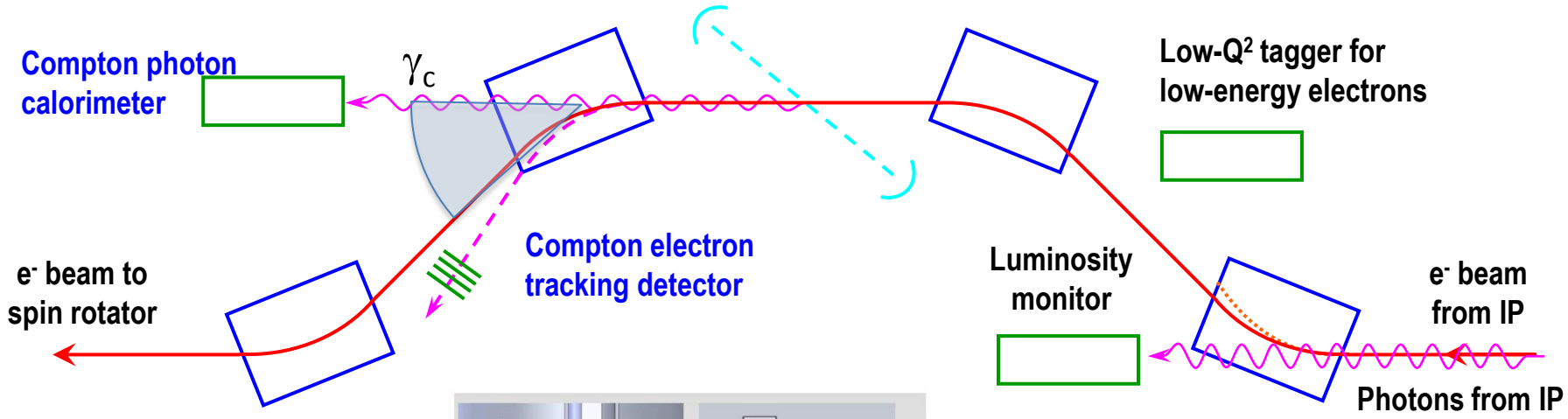

Electron detector not in direct view of synchrotron fan

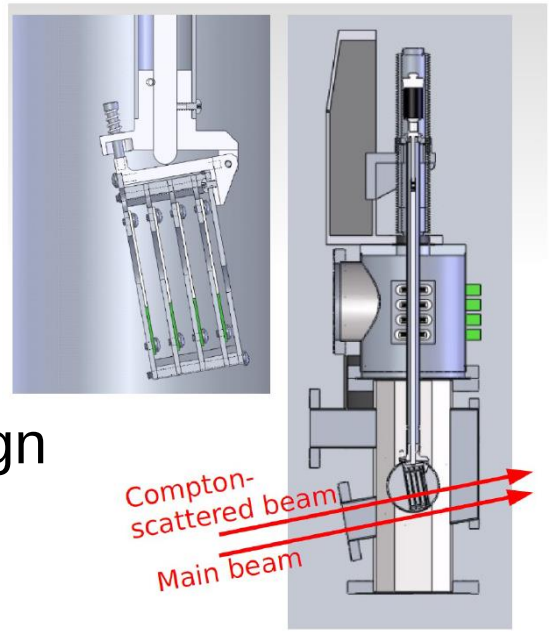

Existing Hall C design

TOTEM Roman Pot

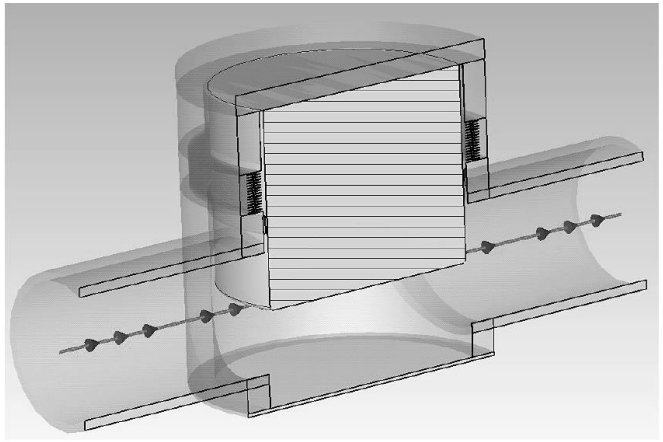

Compton polarimeter electron detector

- Silicon or diamond strip option
- About 200 to 250 strips 250 μm width
- 5 cm length to catch zero crossing

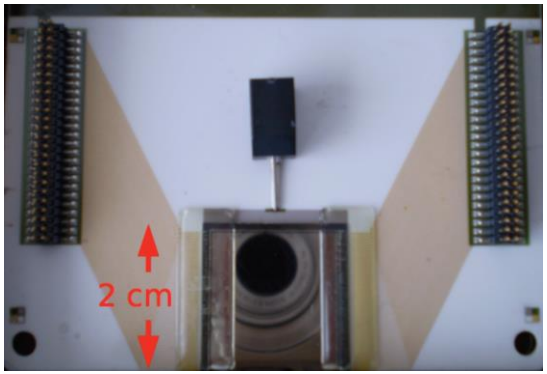

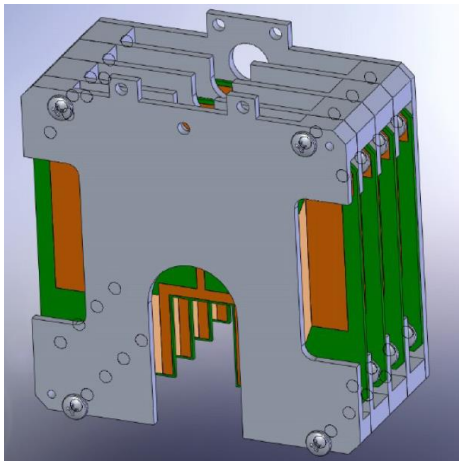

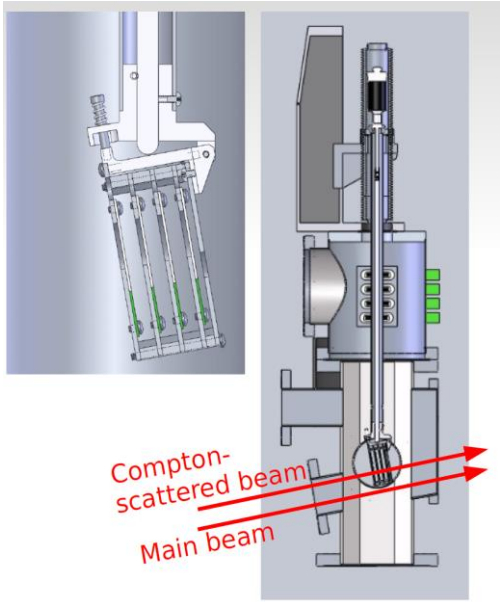

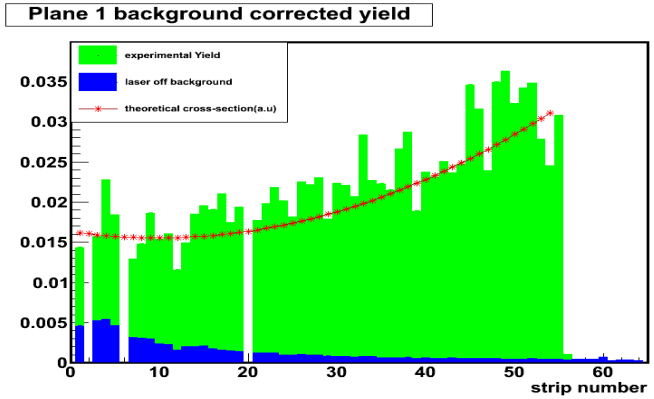

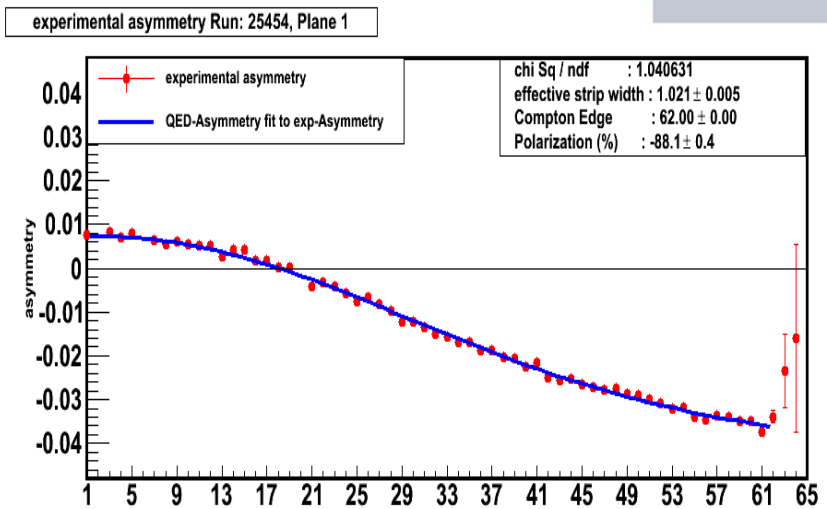

Compton polarimeter electron detector

- Detector options (rough properties)

Detector	Si	LGAD	Diamond	MAPS
Thickness	200 um	50 to 30 um	500 um	50 to 30 um
Neutron fluence	3.10^15	3.10^16	10^16	>5.10^14
Dose Mrad	3	30	100	1
Timing resolution	50 ns	30 ps	80 ps	<16 ns
Costs	$	$	$$$	$

Roman pots from TOTEM

- For small angle detection
- Two chambers
- Thin window
- Can be moved in and out from beam
- Typical 10 to 15 sigma
- Up to 4-5 sigma in optimal places
- Might work for electron side at both JLEIC and eRHIC to be studied

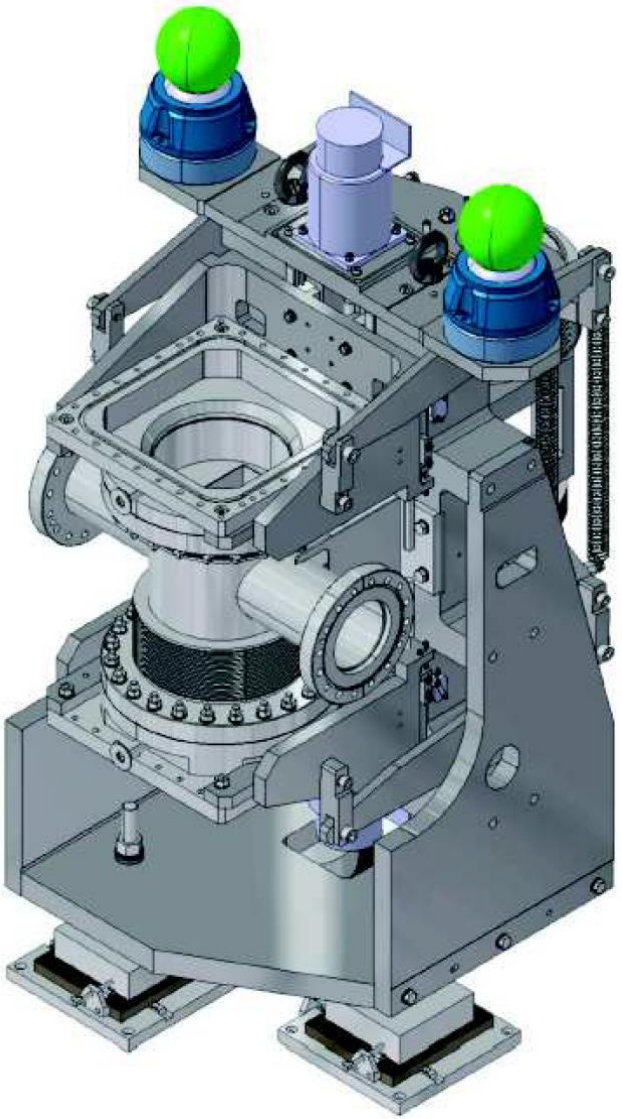

Measurement times for 1% statistics

Energy	Current	1 pass laser (10 W)		FP cavity (1kW)	
(GeV)	(A)	Rate (MHz)	Time for 1% uncertainty (ms)	Rate (MHz)	Time for 1% uncertainty (ms)
3	3	26.8	161	310	14
5	3	16.4	106	188	9
10	0.72	1.8	312	21	27

Typical measurement takes less than 1 second even at 10 Watts of laser power

Synchrotron radiation

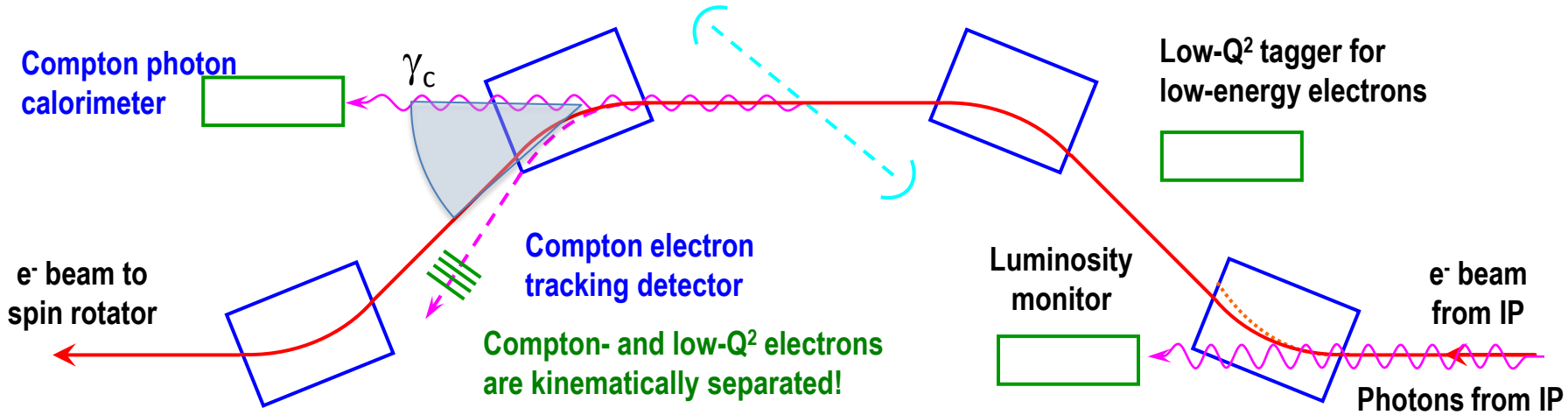

Electron detector not in direct view of synchrotron fan

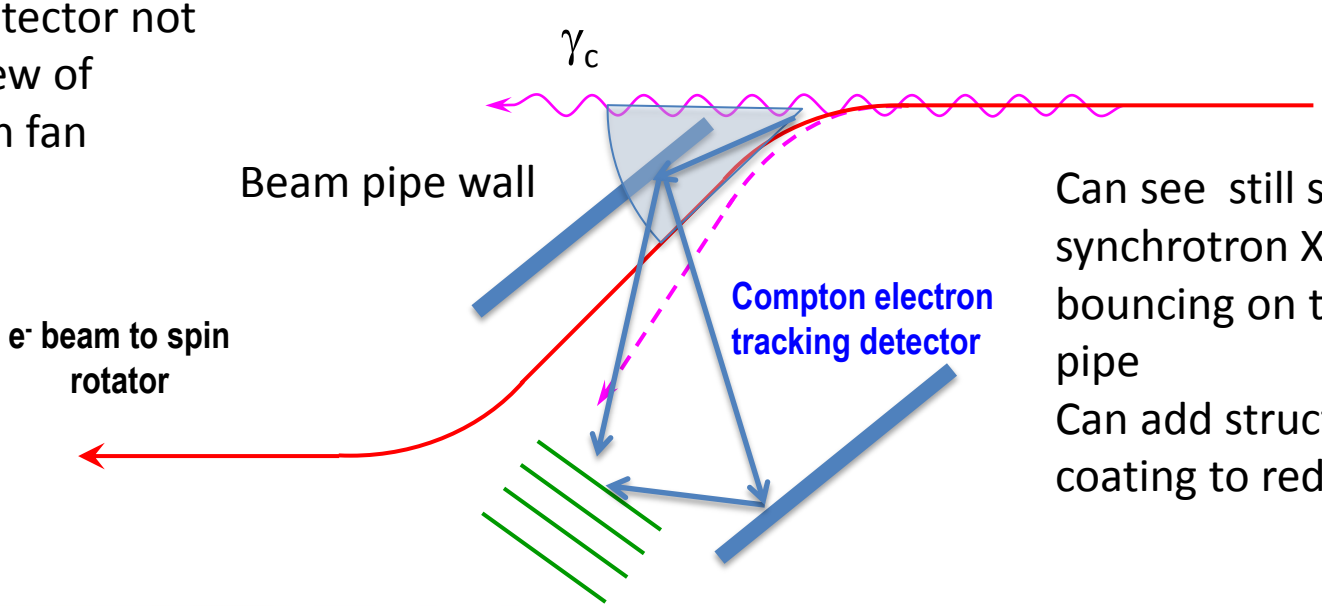

Can see still see synchrotron X-rays bouncing on the beam pipe

Can add structure and coating to reduce rate

Ante-chamber method

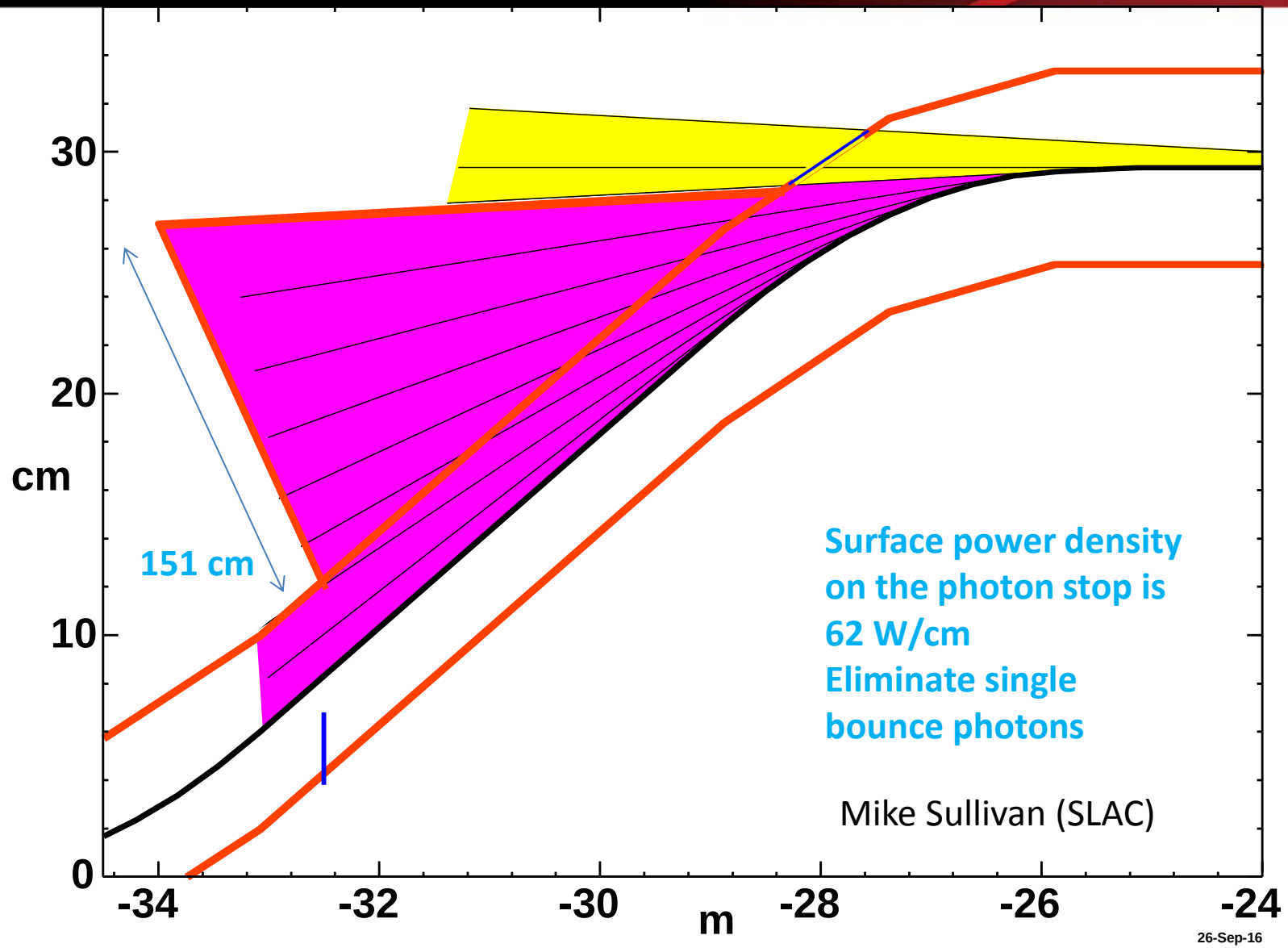

Surface power density on the photon stop is 62 W/cm
Eliminate single bounce photons

Mike Sullivan (SLAC)

Wakefield (EIC RP)

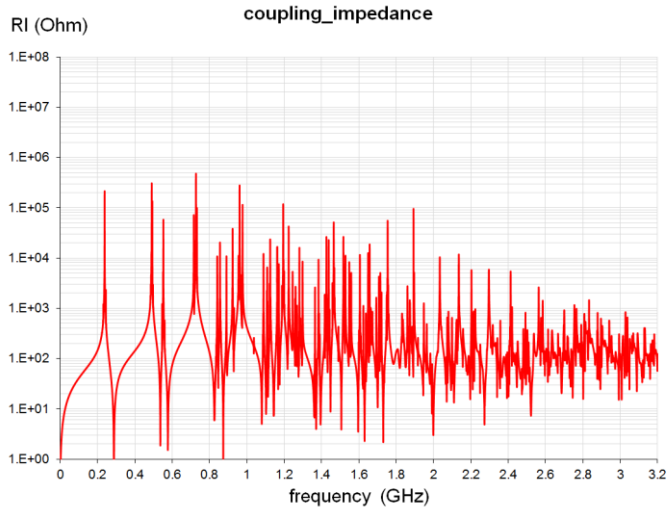

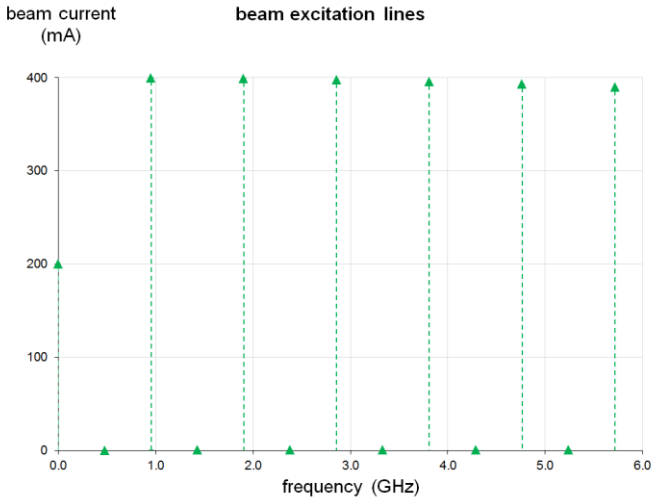

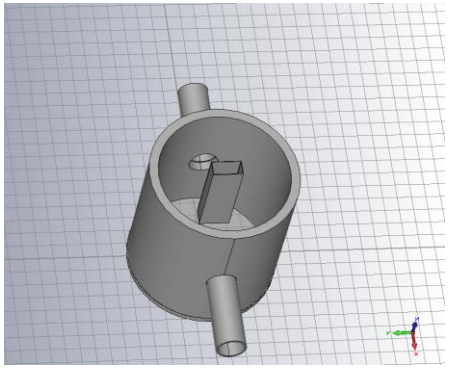

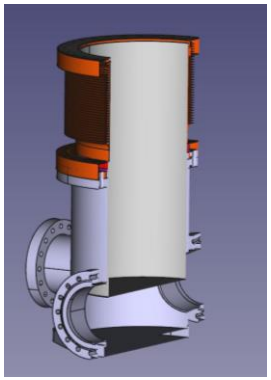

- Impedance evaluation interrupted after 37 hours of computation
- Estimate power deposit
  - 340 W for 0.4 A
  - 2.55 kW for 3 A
- Possible with liquid cooling

Wakefield (EIC RP)

- TOTEM design

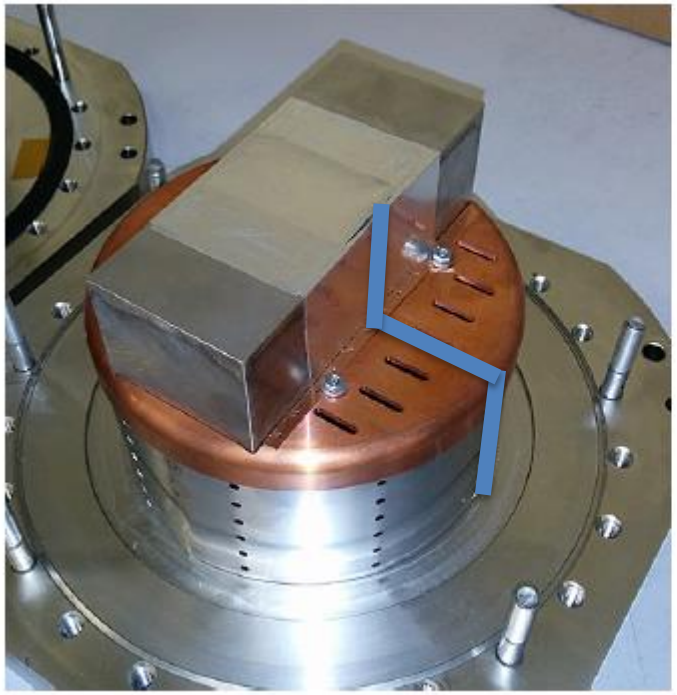

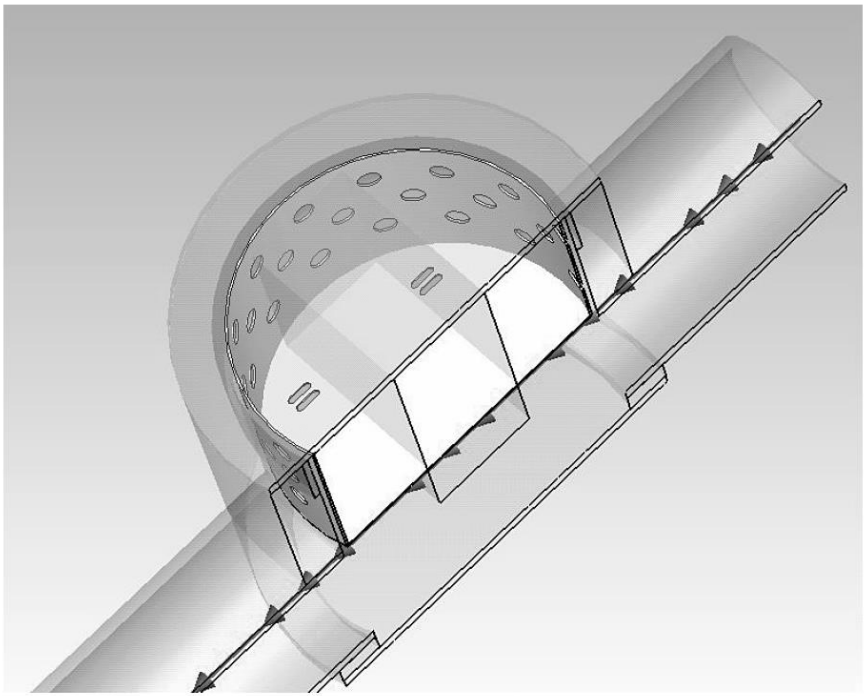

Deliverable estimate for FY 2019

- Simulation
  - Implement beam pipe in magnet
  - More cross check with old simulation
  - Full simulation with Interaction Region and beam pipe
  - Run simulation large scale on batch farm will full setup
  - Halo modelling
  - Model beam laser interaction
  - Implement polarization extraction analysis
  - Study of systematics and optimization of the setup
  - Realistic Roman Pot Geometry
  - Synchrotron radiation study, detector response to synchrotron photons

GEMC framework at JLab

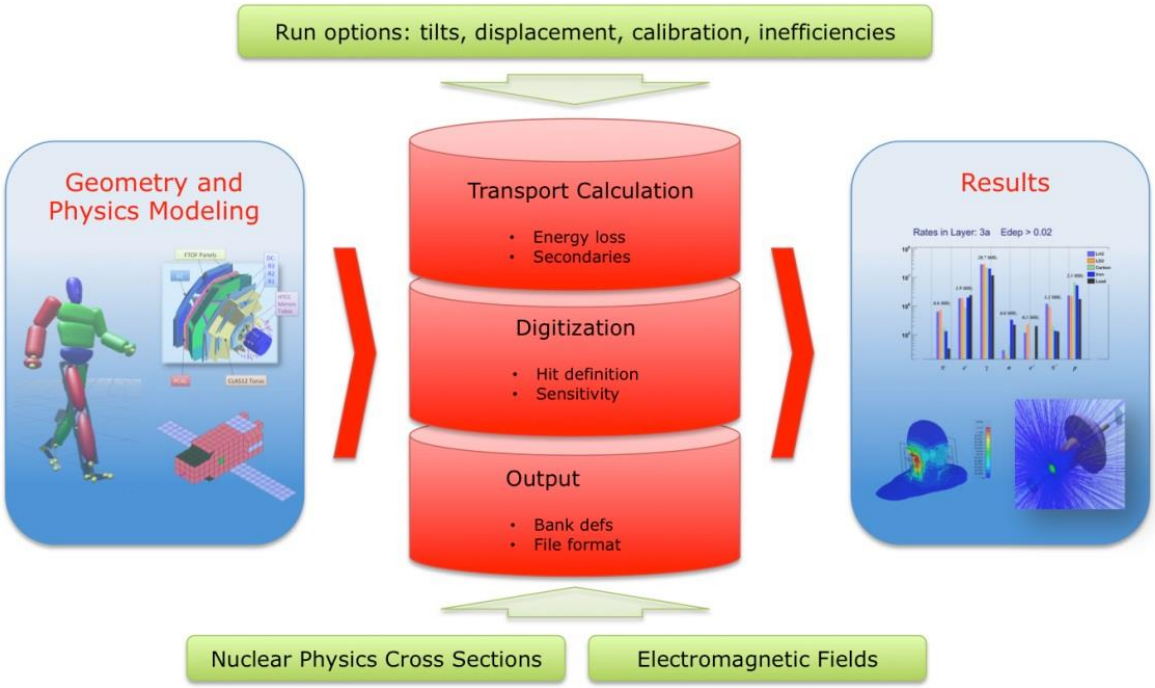

The architecture of gemc

GEMC: Application built on GEANT4. Used to simulate particles through matter.

Intended to make simulations available without the requirement of GEANT4 or C++ knowledge.

Allows for real-time changes in experimental parameters without
the need to recompile

<u>GEant Monte Carlo</u> (GEMC) is the primary simulation framework for the JLEIC detector design including the Compton polarimetry R&D effort.

Detector and beamline geometries added via simple perl API.

Beamline Geometry in GEMC

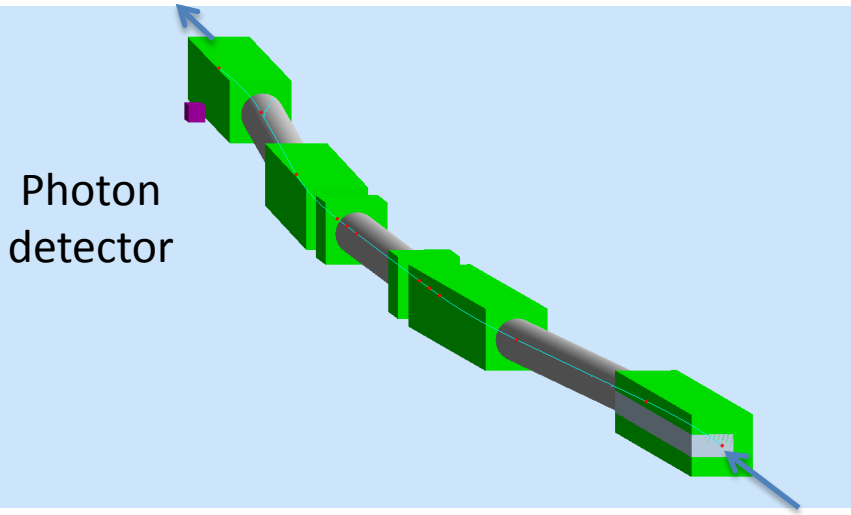

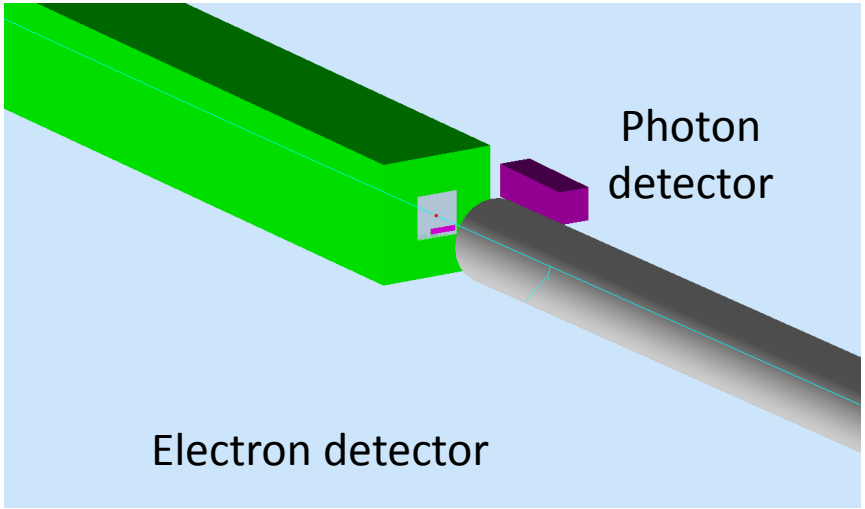

- Beam pipe implemented
- All presentation simulation results only done with the chicane to speed up the studies

Simulation results

– Signal to background different energies

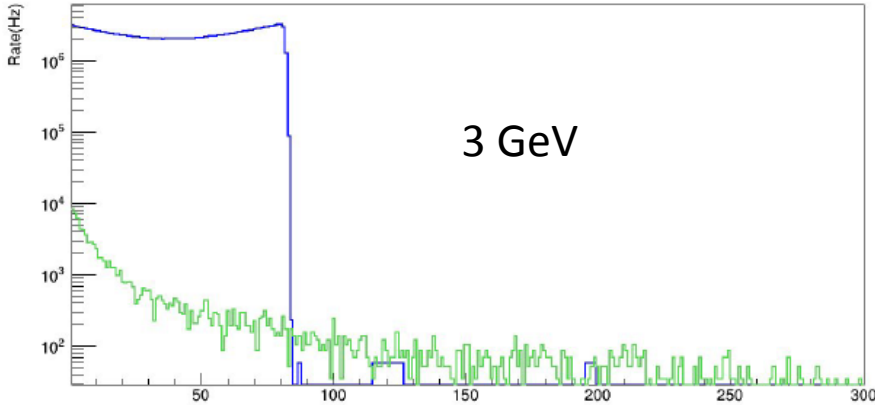

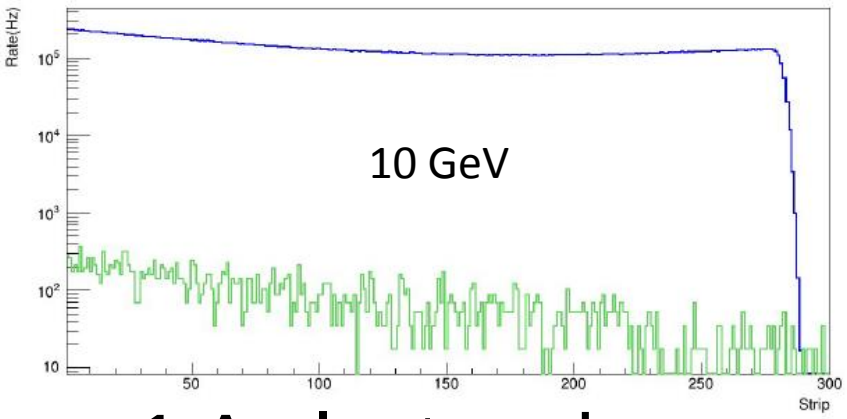

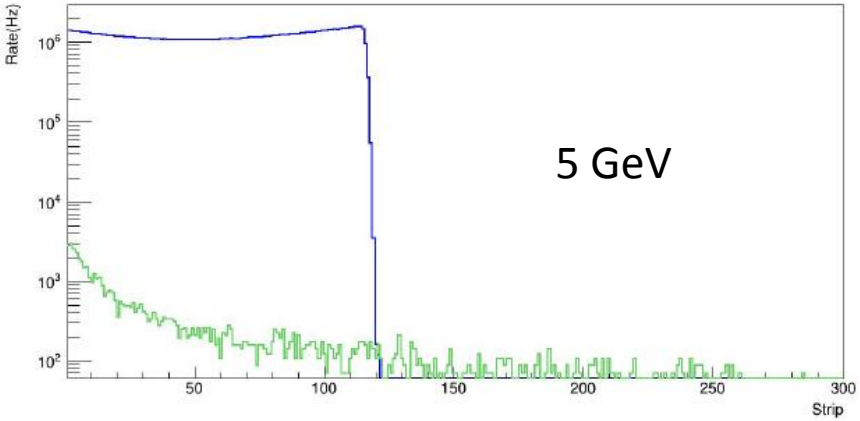

- 1 A electron beam
- 10^{-9} torr
- 10 W CW laser
- Bremsstrahlung is ok at all energies

Halo contribution for apertures

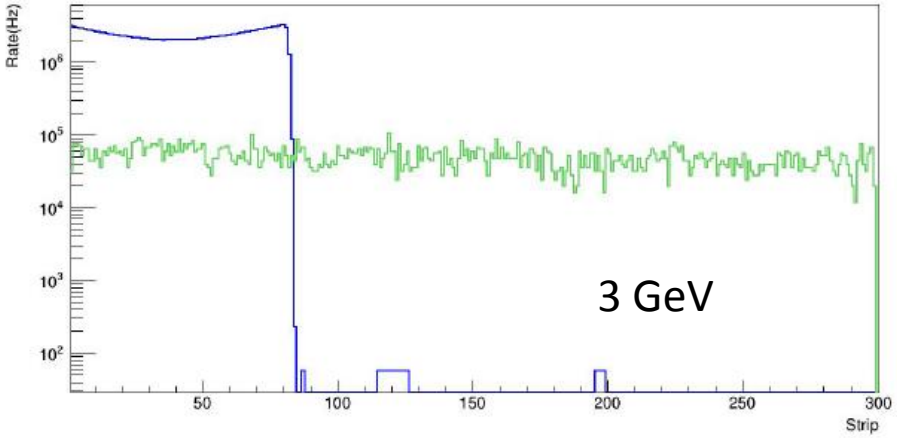

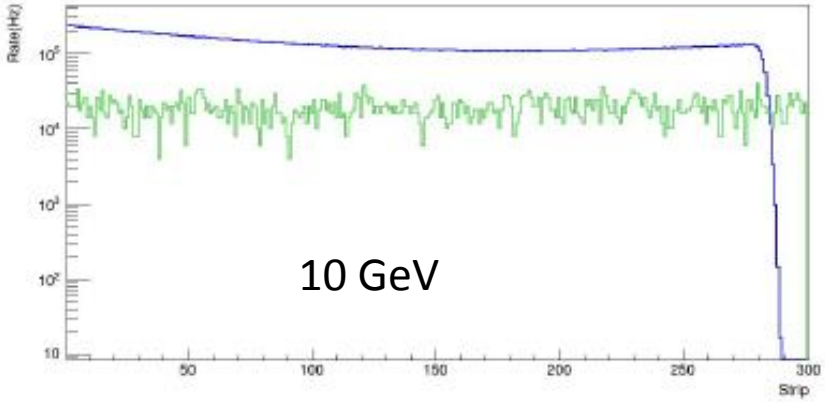

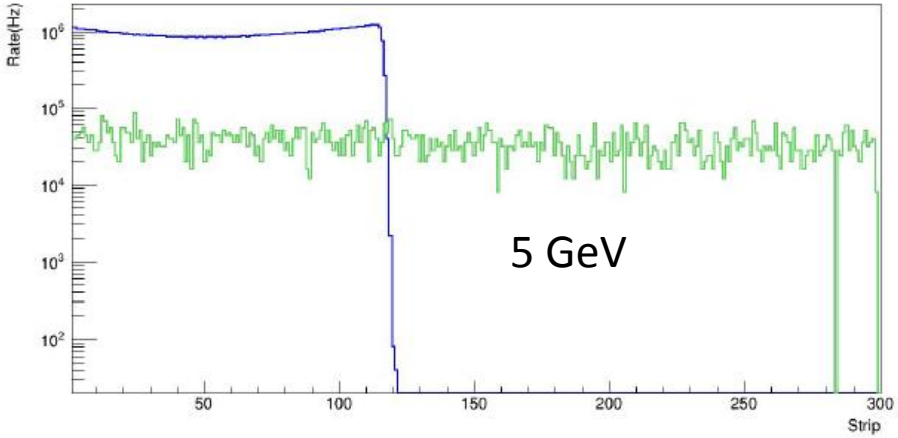

- 1 cm aperture
- S/B still around 10
- 10 W CW laser no need for aperture unless need more power with cavity

Beam halo modelling

Both GEANT3 and GEANT4 simulations uses description of beam halo from PEPII design report[1].

Halo flux is about 0.25% of total beam flux

Backgrounds due to halo can contribute in two locations

Interactions with cavity apertures
Direct strike of electron detector

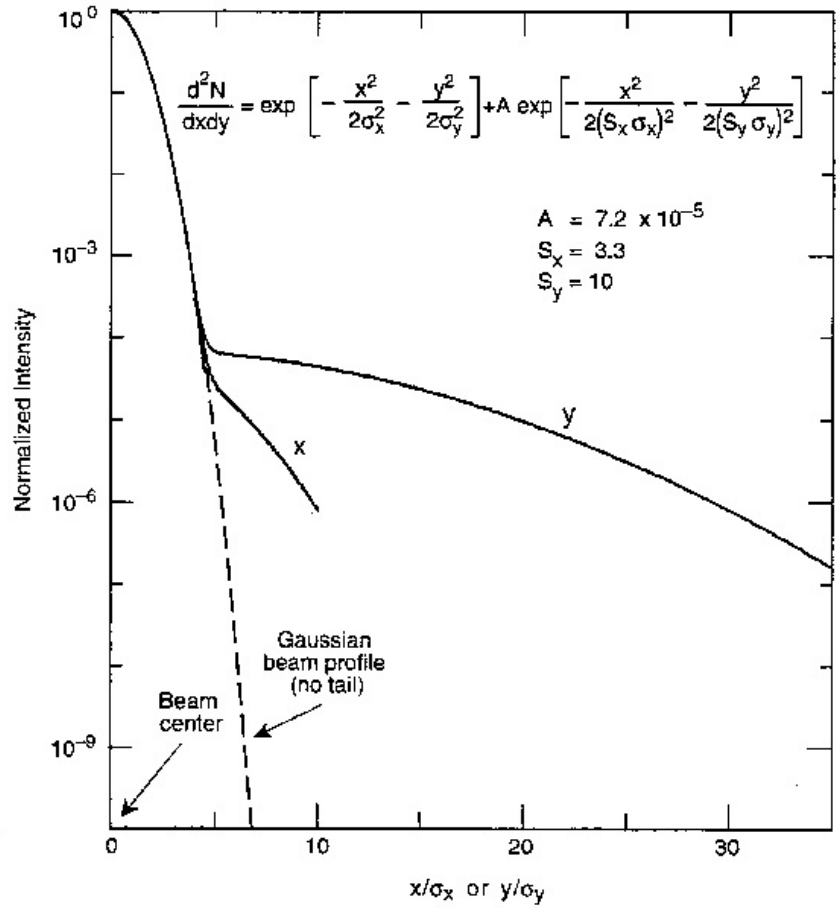

Halo induced background

Halo contributions from the IP due to apertures, were studies over both energies.
Rates are at an acceptable level and easily controllable be varying the aperture size.
The more pertinent problem is halo interacting with the detector directly.

Halo in the detector is a potential problem if the width is not controlled (worst case 1.6 MHz).
More accurate estimations of potential values are possible once we are provided with estimated beam properties

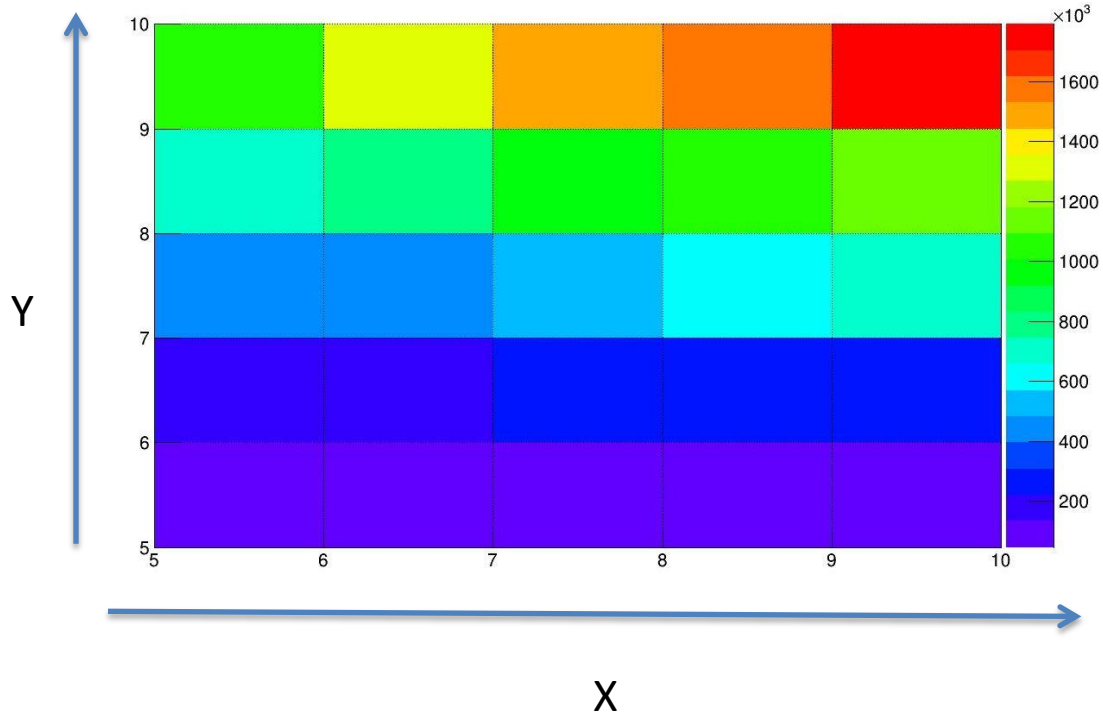

Detector rate for different combinations of the halo
Multipliers. Rates are for halo at the detector.

Strip size optimization

Strip Size	Energy (GeV)	Polarization	χ^2/NDF
240 μm	3	-97.02 $\pm$ 0.67	1.02
480 μm	3	-97.97 $\pm$ 0.64	1.09
1200 μm	3	-97.43 $\pm$ 0.65	2.29
2400 μm	3	-96.01 $\pm$ 0.62	4.83
2880 μm	3	-95.25 $\pm$ 0.60	6.01
4800 μm	3	-96.20 $\pm$ 0.64	7.45
240 μm	5	-97.69 $\pm$ 0.58	0.88
480 μm	5	-97.48 $\pm$ 0.58	0.83
1200 μm	5	-97.53 $\pm$ 0.59	0.97
2400 μm	5	-97.41 $\pm$ 0.59	1.02
2880 μm	5	-97.17 $\pm$ 0.59	1.23
4800 μm	5	-96.68 $\pm$ 0.60	2.29
240 μm	10	-97.19 $\pm$ 0.24	1.08
480 μm	10	-97.94 $\pm$ 0.23	1.37
1200 μm	10	-97.79 $\pm$ 0.23	1.36
2400 μm	10	-97.70 $\pm$ 0.23	3.73
2880 μm	10	-97.71 $\pm$ 0.26	4.31
4800 μm	10	-97.65 $\pm$ 0.23	7.96

- strip size can be divided by 5
- 40 strips detectors sufficient for 1% accuracy
- small correction at 3 GeV

Compton asymmetry with window

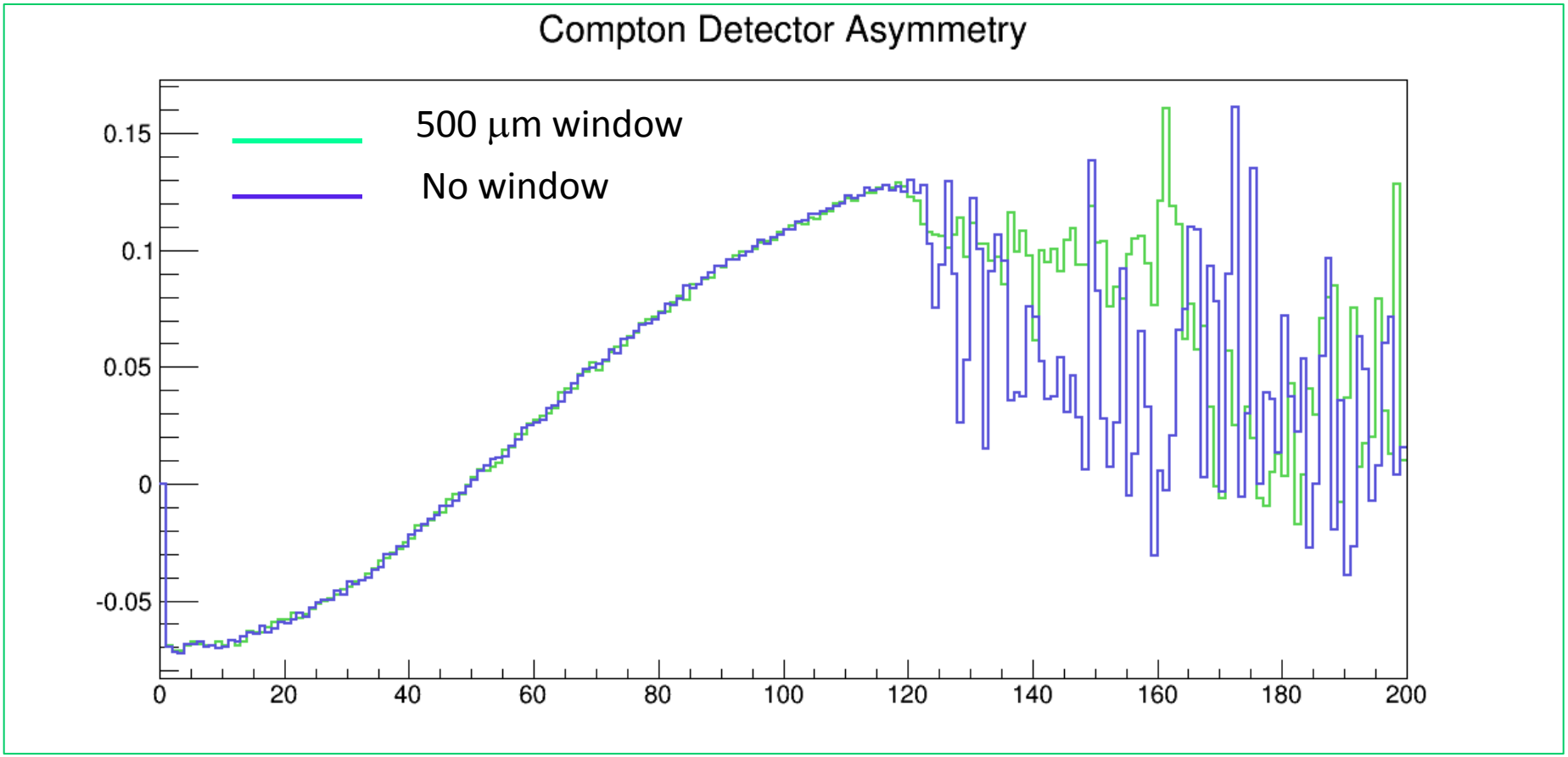

- Higher statistics MC comparison

Effect of RP window

Energy	Thickness	Polarization	Error
3	50	-97.02	+/-0.67
3	500	-96.60	+/-0.90
3	1000	-95.82	+/-0.81
5	50	-97.69	+/- 0.58
5	500	-96.59	+/- 0.79
5	1000	-96.68	+/- 0.50
10	50	-97.19	+/- 0.17
10	500	-97.19	+/- 0.24
10	1000	-97.02	+/- 0.20

- polarization correction at 3 and 5 GeV due to thickness
- consistent with input polarization of 97% within 1% error bar

Example for QWeak

Systematic Uncertainty	Uncertainty	ΔP/P (%)
Laser Polarization	0.1%	0.1
Dipole field strength	(0.0011 T)	0.02
Beam energy	1 MeV	0.09
Detector Longitudinal Position	1 mm	0.03
Detector Rotation (pitch)	1 degree	0.04
Asymmetry time averaging	0.15%	0.15%
Asymmetry fit	0.3%	0.3%
DAQ – dead time, eff.	Under study	??

Systematic uncertainties still under investigation, but final precision expected to be better than 1%

→ DAQ- related systematics likely the most significant remaining issue to study

Conclusions

- Simulation package based on GEMC
  - Electron detector background from Bremsstrahlung and halo are ok at 3,5 and 10 GeV
  - Detector segmentation can go down to 40 strips
  - Halo need to be limited for background and direct strike
  - Vacuum window induce a small correction at lower energyStudy of beam induced background (outgassing)
- Roman pot based Compton electron detector viable options for Wakefield and Synchrotron standpoint for 1% measurement