Overview, General Requirements, Equipment, Manpower

Tanja Horn

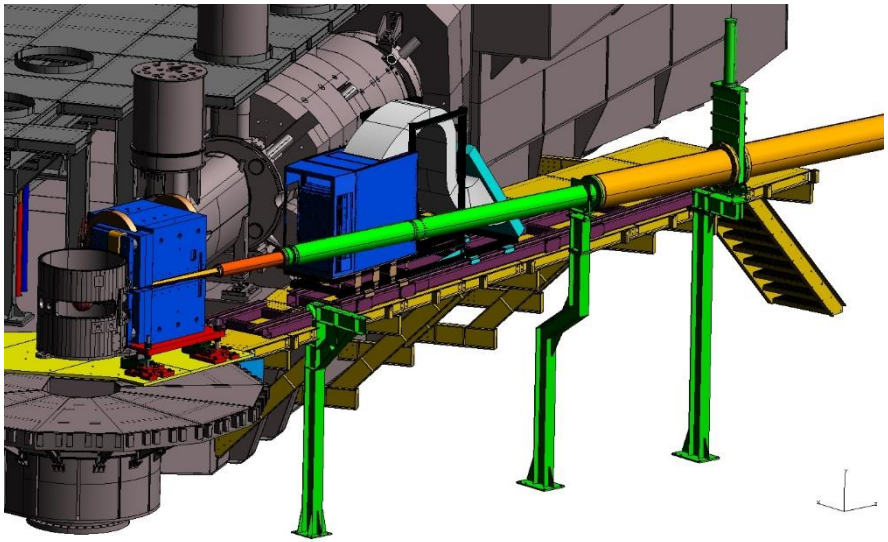

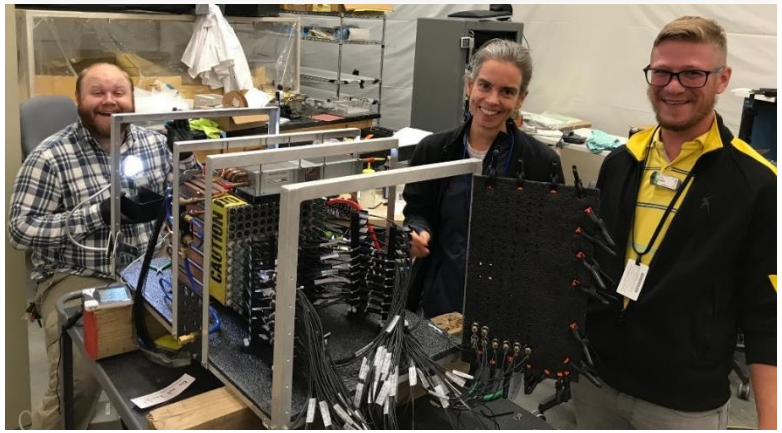

NPS Experimental Readiness Review

Overview

- Neutral Particle Spectrometer replaces one of the Hall C focusing spectrometers in the experiments
  - Angle reach between 5.5 and 60 degrees
  - allows for precision (coincidence) cross section measurements of neutral particles (γ and π^0).
- HMS (existing 6 GeV era)
  - Has been recommissioned for 12 GeV
- Beam line and beam line instrumentation
- Cryogenic liquid hydrogen and solid targets
- Data acquisition, counting house, computing

Hall C focusing spectrometers

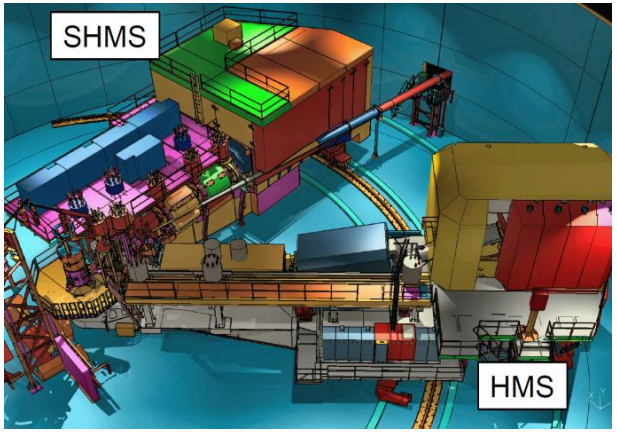

Neutral Particle Spectrometer

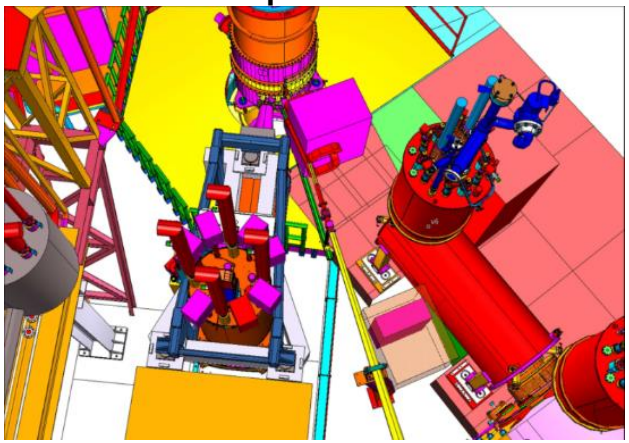

Overview Scientific Program

- Approved experiments to date

NPS ERR 2019

Run group 1

- E12-13-010 – Exclusive Deeply Virtual Compton and π^0 Cross Section Measurements in Hall C
- E12-13-007: Measurement of Semi-inclusive π^0 production as Validation of Factorization

Run group 2

- E12-14-003 – Wide-angle Compton Scattering at 8 and 10 GeV Photon Energies
- E12-14-005 – Wide Angle Exclusive Photoproduction of π^0 Mesons
- E12-17-008 – Polarization Observables in Wide-Angle Compton Scattering

- Conditionally approved experiments: TCS with transverse target

Experimental Techniques

E12-13-010 and E12-13-007

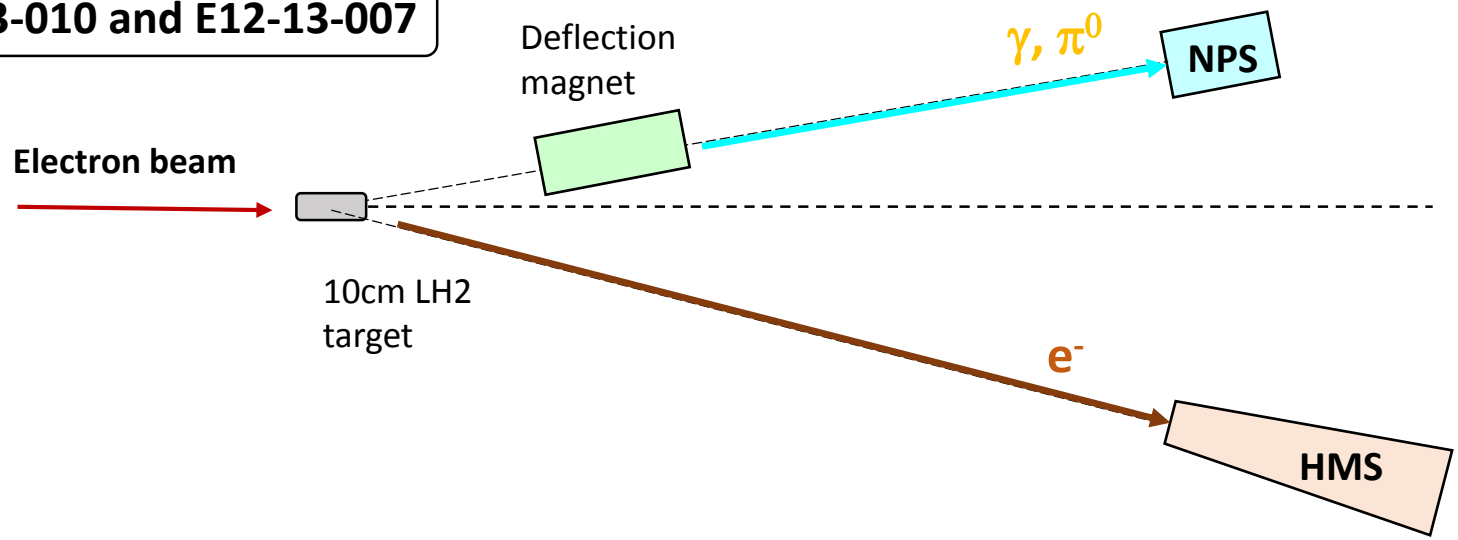

E12-14-003 and E12-14-005

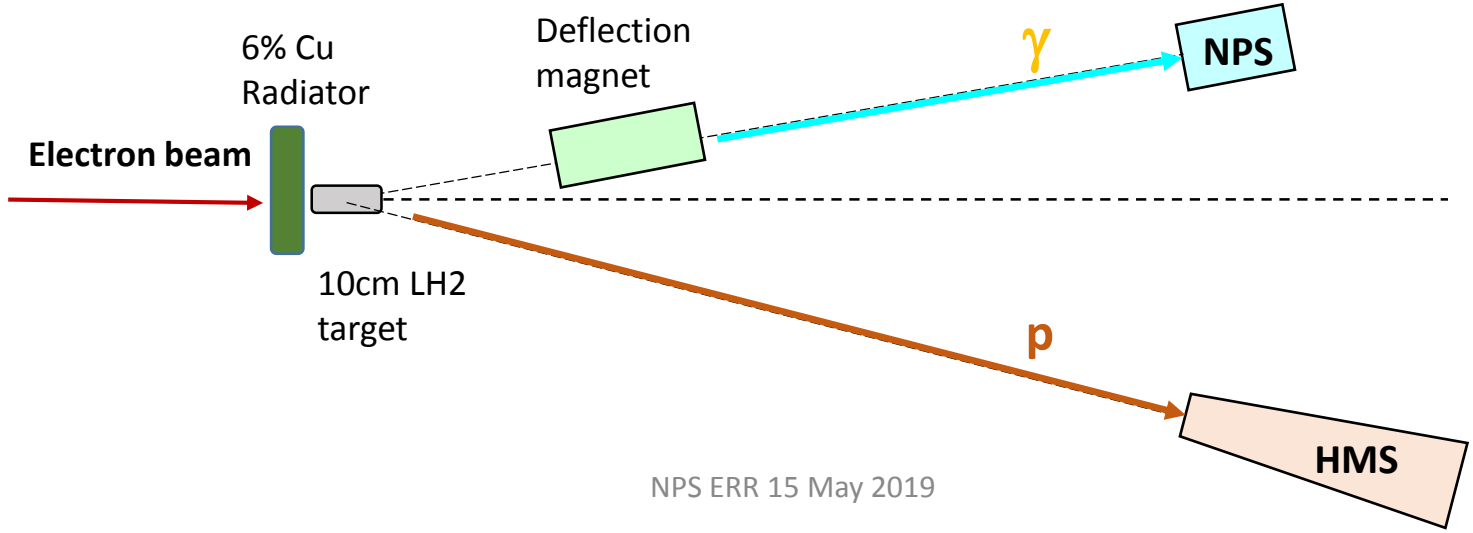

General requirements

E_e=6.6, 8.8, 11 GeV

	E12-13-010	E12-13-007	E12-14-003	E12-14-005
Angular resolution(mrad)	0.5-0.75	0.5-0.75	1-2	1-2
Energy resolution (%)	(1-2)/√E	(1-2)/√E	5/√E	5/√E
Photon energies	2.6-7.6	0.5-5.7	1.1-3.4	1.1-3.4
Luminosity (cm^{-2} cm^{-1})	~10^{38}	~10^{38}	~$1.5x10^{38}$	~$1.5x10^{38}$
Acceptance	60%/25msr	10-60%/25msr		
Beam current (uA)	5-50	5-50	~40; +6% Cu radiator	~40; +6% Cu radiator
Targets	10cm LH2	10cm LH2	10cm LH2	10cm LH2

- ❑ Suppress and eliminate charged background – sweeping magnet
- ❑ Resolution for photon detection – good light yield, fine granularity
- ❑ Expected rates: up to 1MHz – fast response PMT, low gain, low anode current
- ❑ Radiation hardness – integrated doses 20-30kRad, monitoring and curing systems

General requirements (cont.)

- Photon angles and distances of calorimeter from target cover a range

E12-13-010 and E12-13-007

Set	NPS angle	HMS angle	D_{magnet}	$D_{calorimeter}$	Magnet Angle (from Calo)
3/B	16.2	11.7	1.6	3.0	5.5
5/C	12.4	15.3	1.6	3.0	5.5
7	21.7	11.7	1.6	3.0	5.5
D	7.9	24.2	1.6	3.0	5.5
8/E	16.6	15.6	1.6	3.0	5.5
13	6.3	27.9	1.6	6.0	4.0
16	6.3	17.3	1.6	6.0	4.0
F	17.2	17.8	1.6	6.0	4.0

E12-14-003 and E12-14-005

Set	NPS angle	HMS angle	D_{magnet}	$D_{calorimeter}$	Magnet Angle (from Calo)
4A	14.2	40.1	1.85	9.0	5.5
4B	17.9	33.7	1.85	7.0	5.5
4C	22.5	27.8	1.85	5.0	5.5
4D	26.9	23.7	1.40	3.5	5.5
4E	34.0	18.9	1.40	3.0	5.5
5A	11.0	41.7	1.85	11.0	5.5
5B	13.8	35.3	1.85	9.0	5.5
5C	16.9	30.0	1.85	7.5	5.5
5D	19.7	26.3	1.85	6.0	5.5
5E	29.9	17.8	1.40	3.3	5.5

- Two configurations are needed for angles <=23° (SHMS right) and angles >23° (SHMS left)

Equipment to achieve science goals

- ~25 msr neutral particle detector consisting of ~1080 **$PbWO_4$ crystals** in a temperature-controlled frame including gain monitoring and curing systems – outer layers of 30x36 crystal matrix only to catch showers
- HV distribution bases with built-in amplifiers for operation in a high-rate environment
- Essentially deadtime-less digitizing electronics to independently sample the entire pulse form for each crystal – JLab-developed Flash ADCs
- 0.3Tm sweeping magnet allowing for small-angle and large angle operation at 0.6 Tm. The magnet is compatible with existing JLab power supplies.
- Cantelevered platforms off the SHMS carriage to allow for remote rotation (in the small angle range), and platforms to be on the SHMS carriage (in the large angle range)
- A beam pipe with as large critical angle as possible to reduce beamline-associated backgrounds – only a small section needs modification

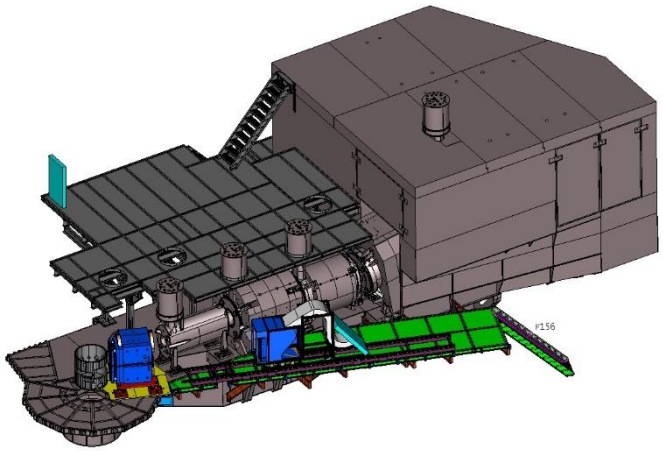

ERR Talks

Magnet – C. Hyde

Detector – C. Munoz-Camacho

Electronics, DAQ – B. Sawatzky

Mechanical structures, installation – S. Lassiter

Beam pipe – J. Benesch

Software, analysis – G. Niculescu

NPS collaboration

- Consists of members involved in NPS construction plus additional collaborators on the four experiments

1. Ibrahim Albayrak (Akdeniz Univ/Turkey)
2. Salina Ali (CUA)
3. Moskov Amaryan (ODU)
4. Vladimir Berdnikov (CUA)
5. William J. Briscoe (GWU)
6. John R.M. Annand (U Glasgow)
7. Arshak Asaturyan (AANL, YerPhI)
8. Vincenzo Bellini (INFN-Catania)
9. Kai Brinkmann (Giessen U.)
10. Marie Boer (CUA)
11. Alex Camsonne (JLab)
12. Marco Carmignotto (JLab)
13. Donal Day (UVa)
14. Dipangkar Dutta (MSU)
15. Stefan Diehl (Giessen U.)
16. Rolf Ent (JLab)
17. Michel Guidal (IPN-Orsay)
18. David J. Hamilton (U Glasgow)
19. Tanja Horn (CUA)
20. Charles Hyde (Old Dominion University)
21. Dustin Keller (UVa)
22. Cynthia Keppel (JLab)
23. Mitchell Kerver (ODU)
24. Edward Kinney (U. of Colorado)
25. Greg Kalicy (CUA)
26. Ho-San Ko (IPN-Orsay)
27. Mireille Muhoza (CUA)
28. Arthur Mkrtchyan (AANL, YerPhI)
29. Hamlet Mkrtchyan (AANL, YerPhI)
30. Carlos Munoz-Camacho (INP-Orsay)
31. Pawel Nadel-Turonski (Stonybrook)
32. Gabriel Niculescu (James Madison U.)
33. Rainer Novotny (Giessen U.)
34. Rafayel Paremuzyan (NH)
35. Ian Pegg (CUA)
36. Hashir Rashad (Old Dominion University)
37. Julie Roche (Ohio University)
38. Oscar Rondon (UVa)
39. Simon Sirca (U Ljubljana)
40. Alex Somov (JLab)
41. Igor Strakovsky (GWU)
42. Vardan Tadevosyan (AANL, YerPhI)
43. Richard Trotta (CUA)
44. Hakob Voskanyan (AANL, YerPhI)
45. Rong Wang (IPN-Orsay)
46. Bogdan Wojtsekhowski (JLab)
47. Steve Wood (JLab)
48. Simon Zhamkochyan (AANL, YerPhI)
49. Carl Zorn (JLab)
50. Jixie Zhang (UVa)

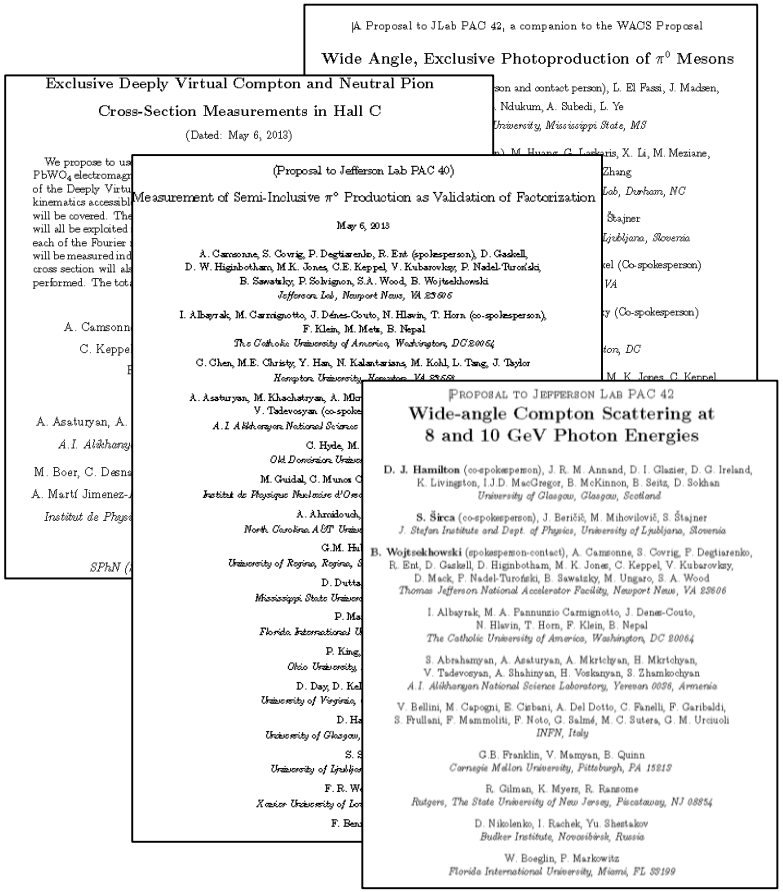
A Proposal to JLab PAC 42, a companion to the WACS Proposal

Wide Angle, Exclusive Photoproduction of π^0 Mesons

Exclusive Deeply Virtual Compton and Neutral Pion Cross-Section Measurements in Hall C

(Dated: May 6, 2013)

(Proposal to Jefferson Lab PAC 40)

Measurement of Semi-Inclusive π^0 Production as Validation of Factorization

May 6, 2013

Proposal to Jefferson Lab PAC 42

Wide-angle Compton Scattering at 8 and 10 GeV Photon Energies

ERR Talk

Track record – G. Niculescu