July 19, 2019

R. Ent and B. Wojtsekhowski

This note presents the development of the CPS instrument, a compact photon source, for use with the polarized targets. Here we summarize the main concept configuration used for the various shielding calculations, and then suggest a few variations to consider for reduced weight and expected reasonable shielding performance, the latter to be confirmed by comparative calculations.

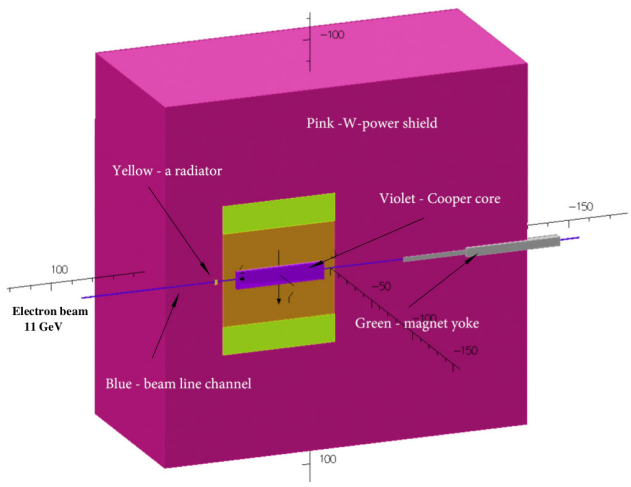

Figure 1: The CPS concept.

The main concept configuration 1 was presented in detail in the report [1]. This configuration was studied in the FLUKA model constructed by Parker Reid, see the reports [2, 3]. This model includes:

- A magnet with wedged permendur poles. The overall dimensions of the magnet yoke are 70 cm x 70 cm x 54 cm.
- A copper block, which absorbs the most of the beam power, located between the magnet poles. The copper block has a 3 mm x 3 mm opening for the photon beam and water cooling channels, 10-15 cm from the beam axis.
- A W-Cu insert, which fills the space inside the magnet between the copper absorber and the magnet components (coils, poles, yoke).
- A tungsten shield (density of 16.3 g/cm^3) 170 cm x170 cm x (55+120) cm. The shield faces are located at 55 cm upstream and 120 cm downstream of the magnet center.
- The opening in the shielding in the forward direction gradually reaching 4 cm x 4 cm size at the exit of the beam.

To this model we added a thin 10-15 cm layer of borated plastic, at the outer side of the W shielding, to remove the soft neutrons, see Figure 2. This allows a significant further

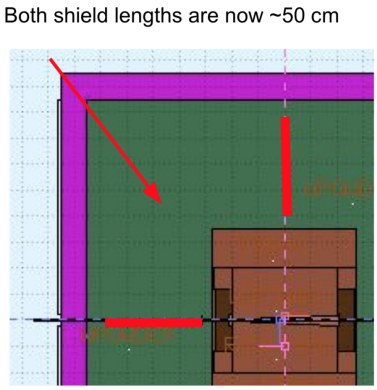

Figure 2: The FLUKA model constructed by Parker Reid.

reduction of the neutron flux which activates equipment in the Hall. This idea was further verified in simulation and the results were presented in the report [4],

Here we suggest a few further steps which could allow us to reduce the weight and cost of the device. They are based on the following observations:
1) The shielding thickness can be equalized in the proper directions, *e.g.* the corners of the tungsten box could be rounded, which could lead to a large 50% reduction of the W powder volume.
2) The shielding thickness could be further reduced in the direction down to the floor.
3) As long as the radiation level during CPS operation with the polarized target is at or below the level typical for polarized target operation with an electron beam of 0.1 μA, it should be acceptable.

The figures and captions below present the configurations of interest. To give an estimate, if calculations indeed confirm acceptable radiation levels, the W volume could be reduced from 4.8 to roughly 2.2 m^3, or perhaps even 1.8 m^3, which would have a projected cost of as low as \$1.1M. *I.e.*, we may be able to find solutions with much reduced costs of tungsten-powder as compared to our initial estimates, and still effective shielding.

The calculations of the radiation intensity and activation should be performed for several locations, where we suggest for consideration:

- The JLab area boundary.
- The Hall roof.
- The polarized target magnet coil.
- The NPS detector front.
- A location at 10 meters downstream of the target at 10, 30, and 50 degrees from the beam line.

References

[1] B. Wojtsekhowski, report at CPS meeting, September 2017, https://wiki.jlab.org/cuawiki/images/4/40/Magnet-2_for_CPS.pdf.

[2] Parker Reid, report at CPS group meeting, Feb. 13, 2018, https://wiki.jlab.org/cuawiki/images/f/f6/CPS_Parker_Update_FEB13-2018_.pdf.

[3] Parker Reid, report at CPS group meeting, March 13, 2018, https://wiki.jlab.org/cuawiki/images/0/03/CPS_March13_Parker.pdf.

[4] Parker Reid, report at CPS meeting, April 10, 2018, https://wiki.jlab.org/cuawiki/images/8/85/CPS_Plots_Parker.pdf.

http://people.virginia.edu/~gdc4k/hybrid_prc_v14.pdf.

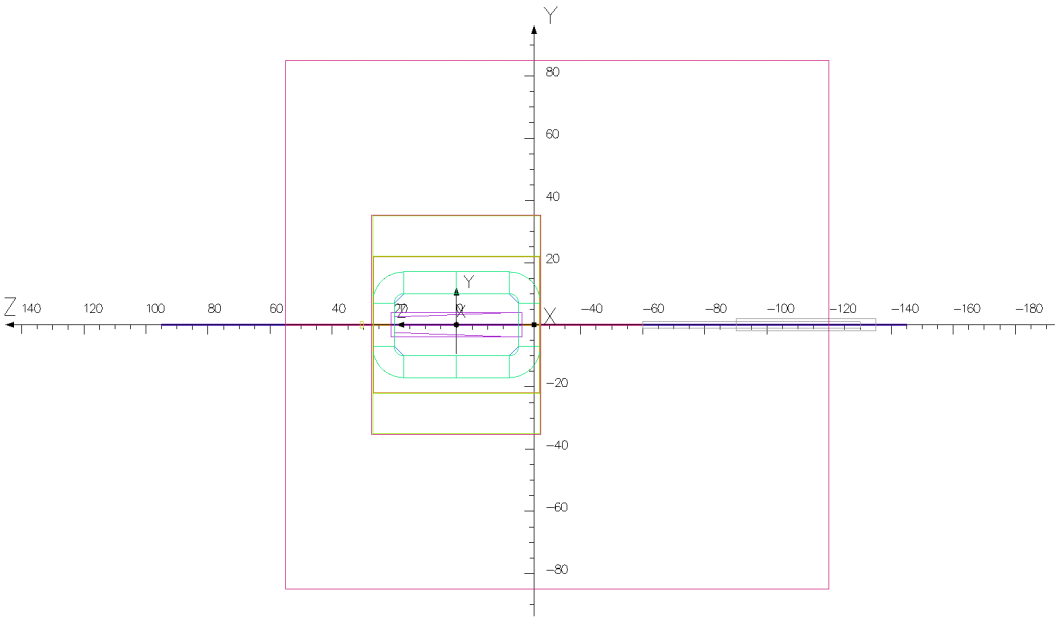

Figure 3: This figure shows the dimensions of the main concept that we have studied extensively. The volume of W in this "Configuration 1" is 4.79 m^3.

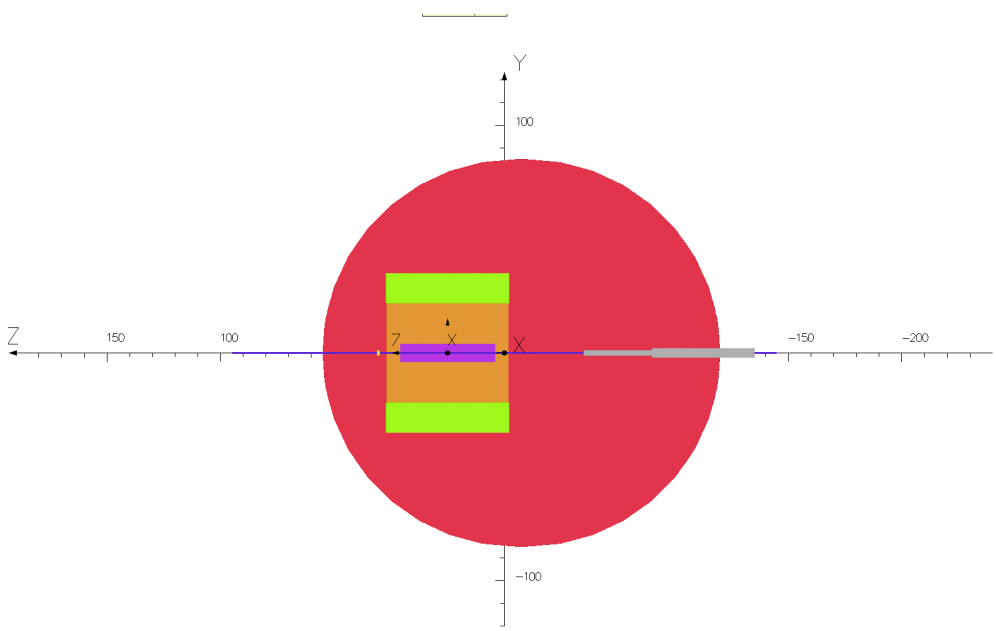

Figure 4: Configuration 2 is with rounded ends of the W cylinder. The volume of W in this configuration is reduced from 4.79 to 2.34 m^3.

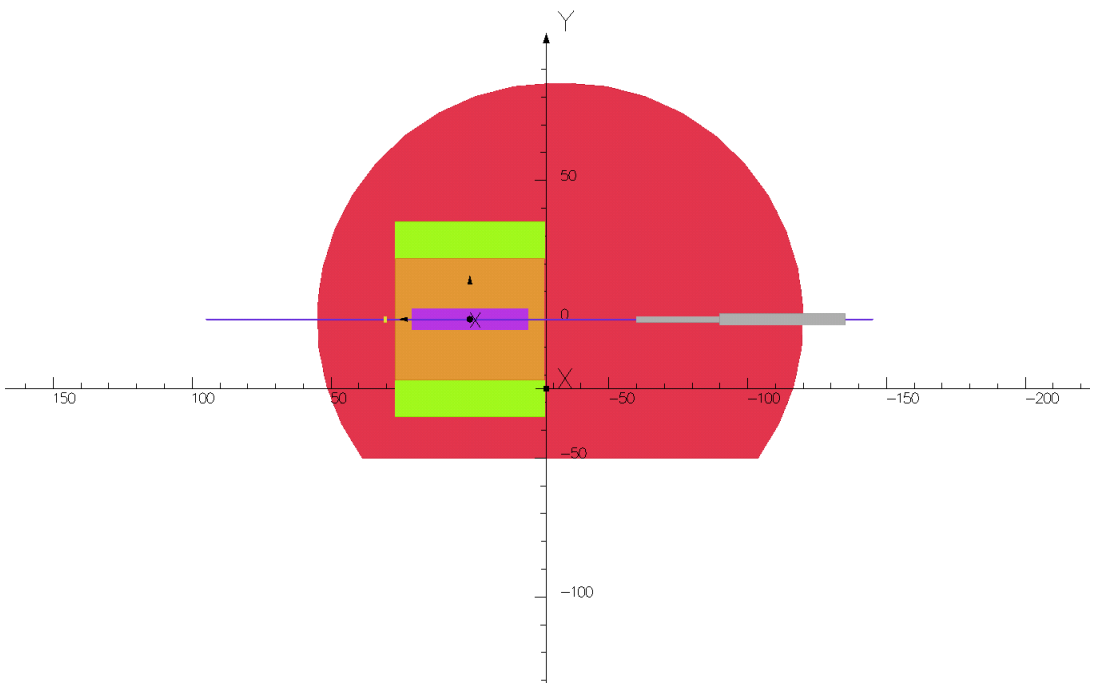

Figure 5: Configuration 3 is the same as Configuration 2 but with the bottom flat, as less shielding is required in the direction of the floor. This would reduce the volume of W further, from 2.34 to 2.04 m^3.

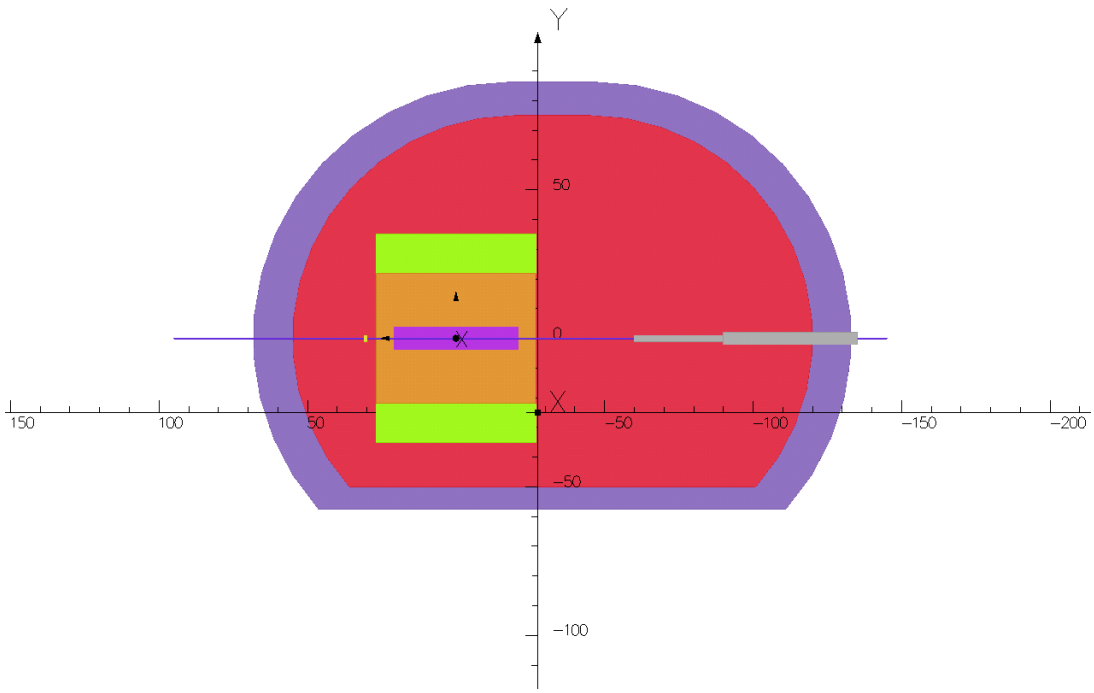

Figure 6: Configuration 4 is the same as configuration 3, but with a further reduced diameter of the cylinder, and a 10-15 cm layer of borated plastic. The volume of W is reduced to 1.8 m^3.