NPS: Mechanical Structures and Installation

May 15, 2019

Steven L

NPS: Mechanical / Installation Outline

- I: NPS Configurations
- II: SHMS Structure Modifications
- III: Hardware and Platforms
- IV: Installation Schedules and Resources
- Summary

I: NPS Configurations

- NPS angles on the SHMS right side will range from Θγ = 6° to 23°.
- E12-13-010 and E12-13-007 will be ran with NPS on the SHMS right side only.

SHMS Angle relative to NPS Angle is 16.43°

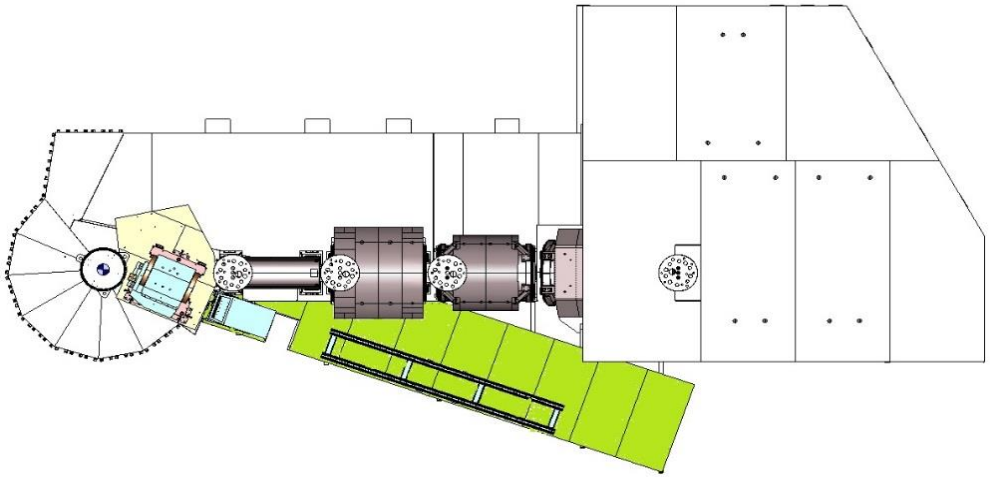

- E12-14-003 will have the NPS on both sides of the SHMS. Θγ can range from 23° to 57.3°.

SHMS Angle relative to NPS is 17.5°

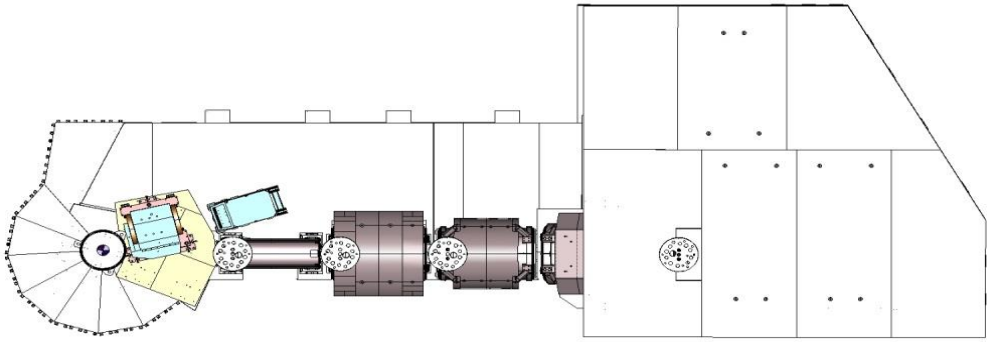

Minimum NPS Angle 6° Detector@4m Sweeper @ 2°

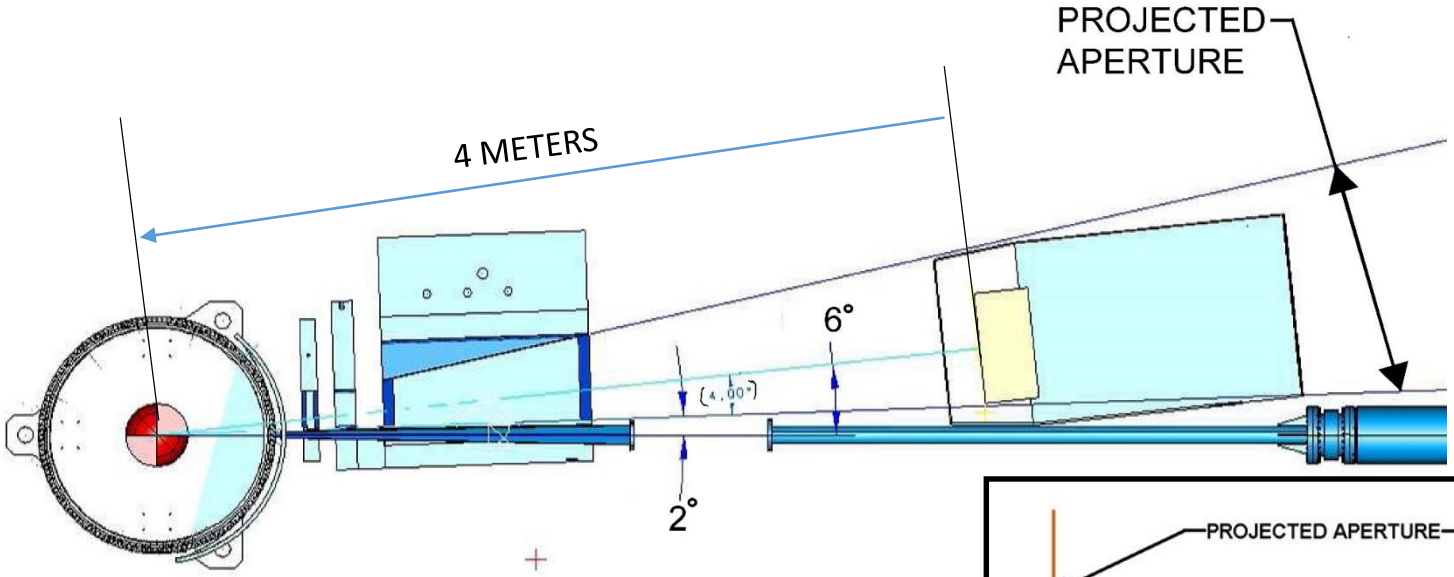

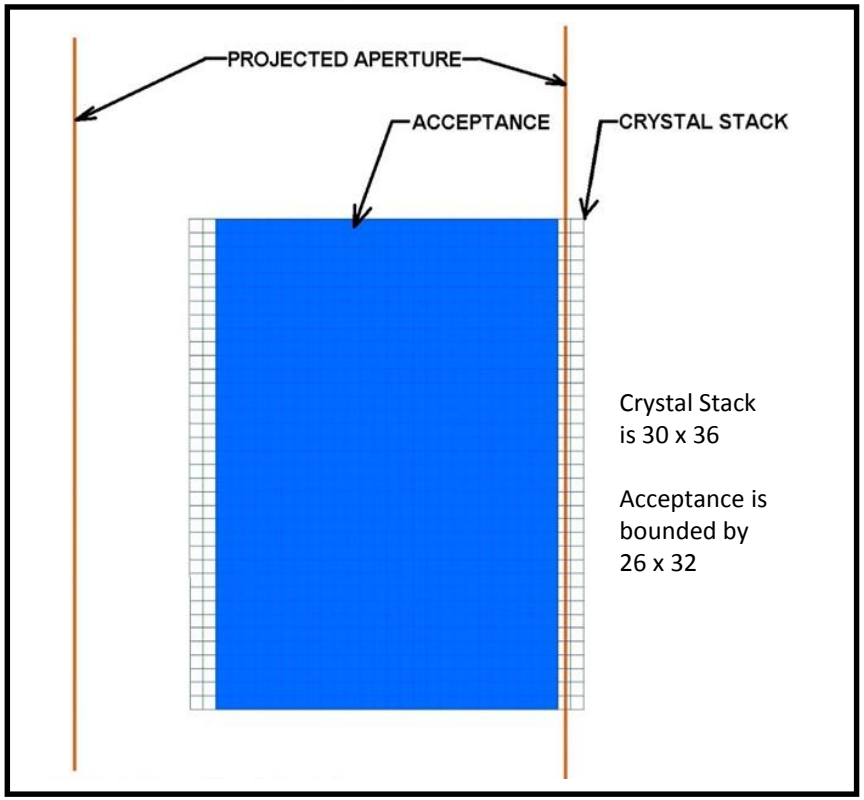

NPS CONFIGURATION:

CALO DISTANCE = 4 METERS
MAG DISTANCE = 1.6 METERS
MAG ANGLE = 4.0°

MINIMUM NPS ANGLE IN THIS CONFIG IS 6°

8.5° Detector@3m, Sweeper @ 3°

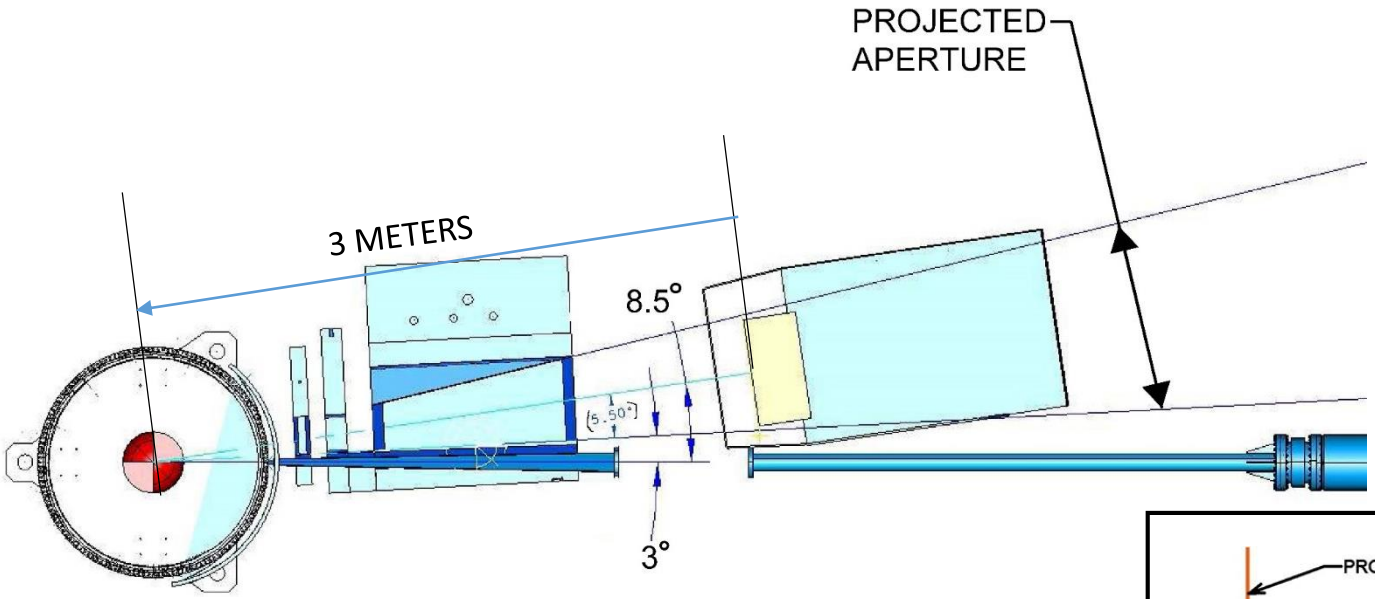

Sweeper Magnet will be rotated by 1.5° about its center.

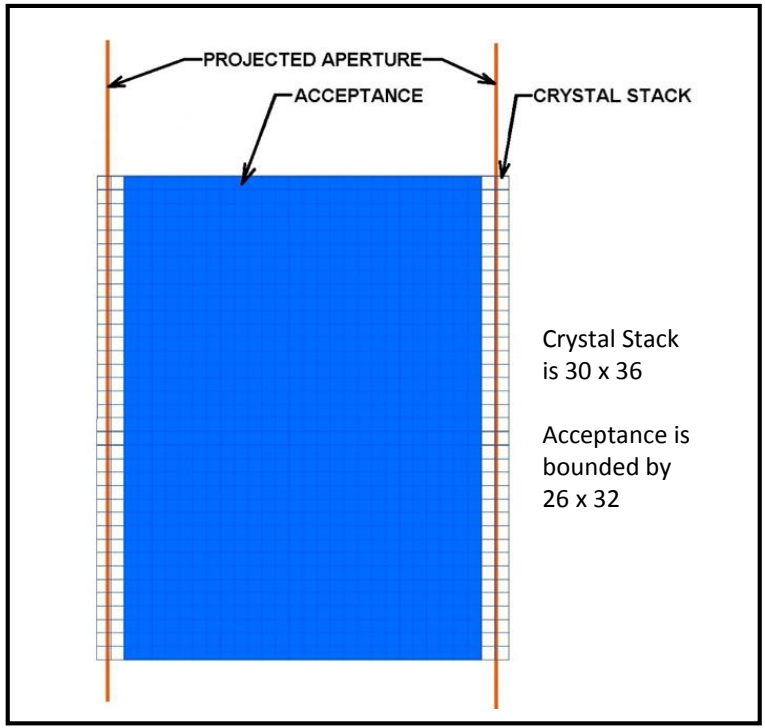

NPS CONFIGURATION:

CALO DISTANCE = 3 METERS
MAG DISTANCE = 1.6 METERS
MAG ANGLE = 5.5°

MINIMUM NPS ANGLE IN THIS CONFIG IS 8.5°

NPS SHMS Right Side

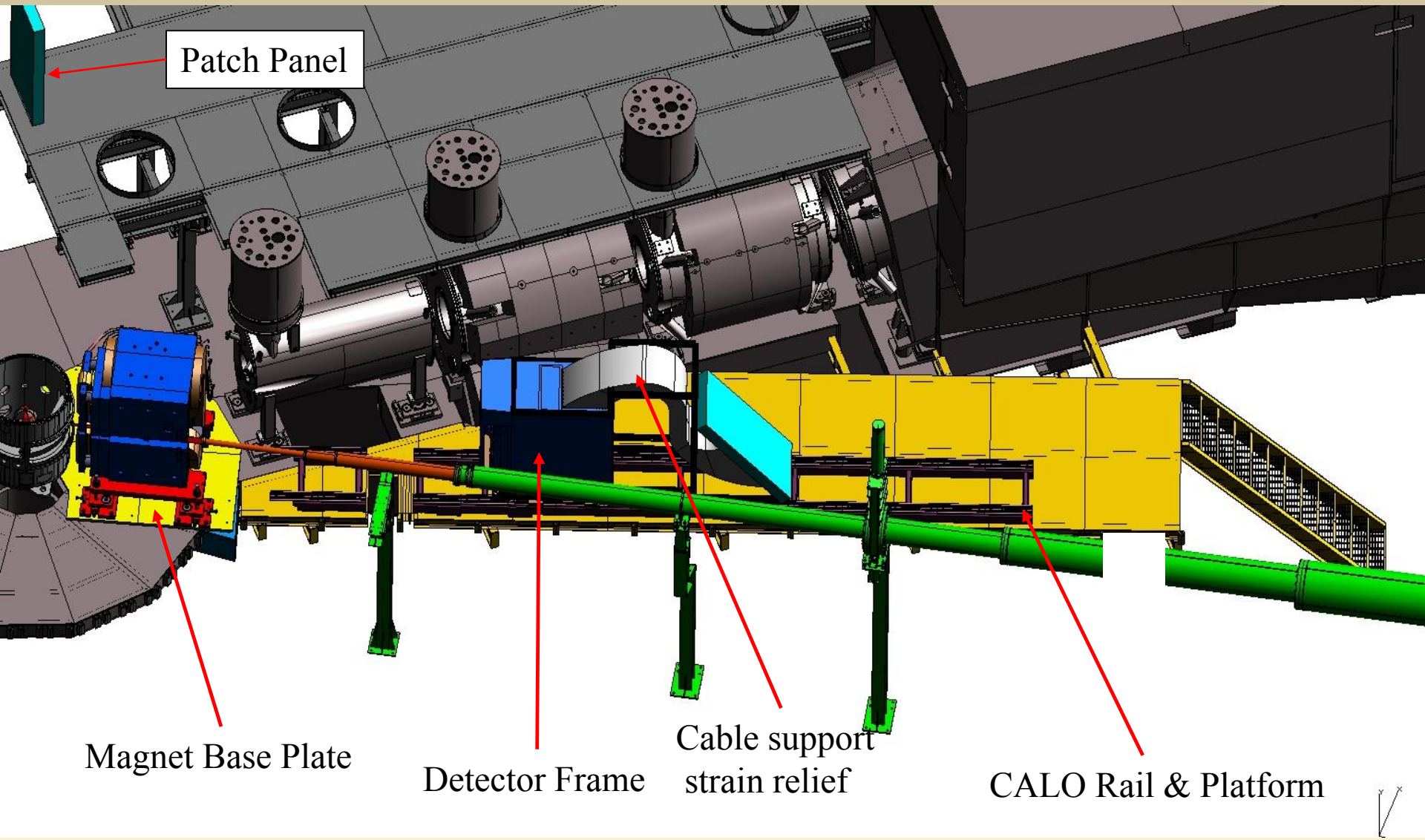

NPS SHMS Left Side

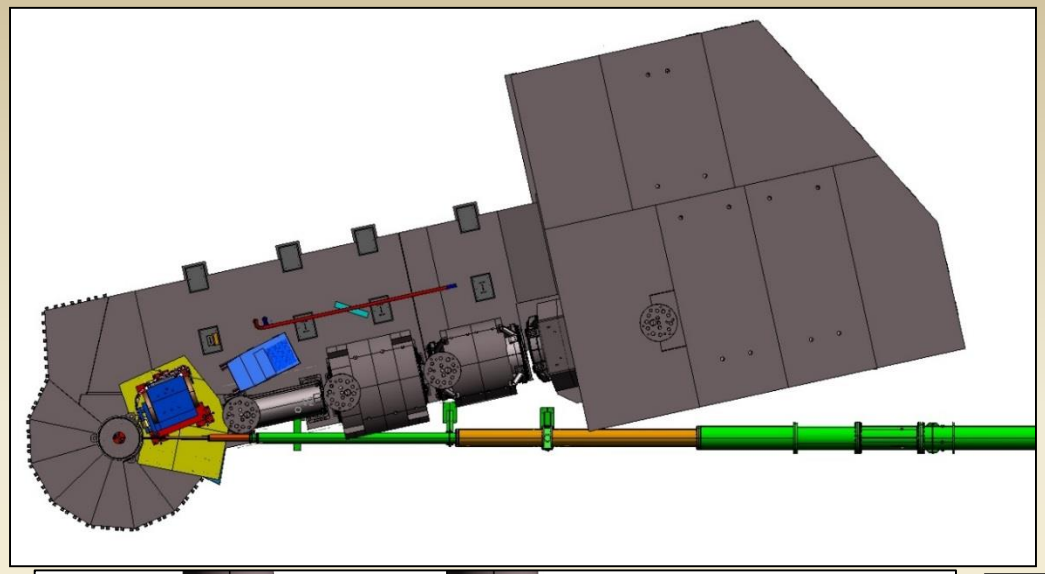

- Corrector coils removed
- Field clamps removed
- SHMS upper deck not shown for clarity – no fouling issues

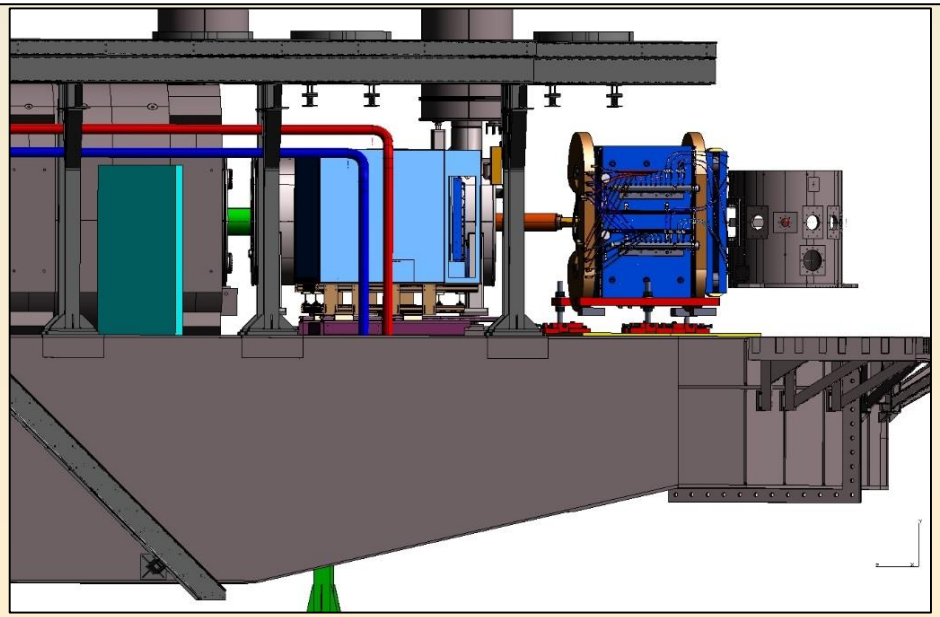

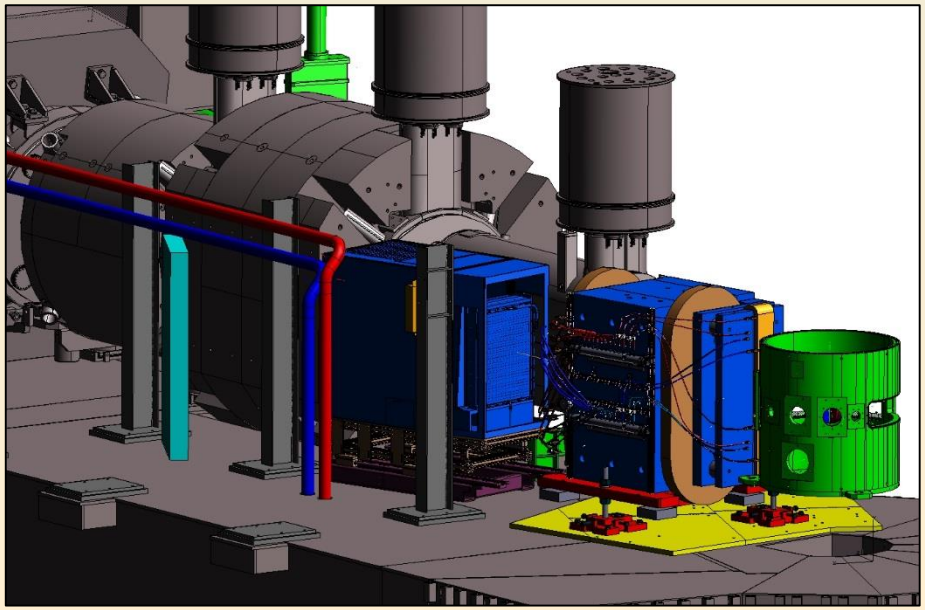

II: SHMS Structure Re-Enforcements & Additions

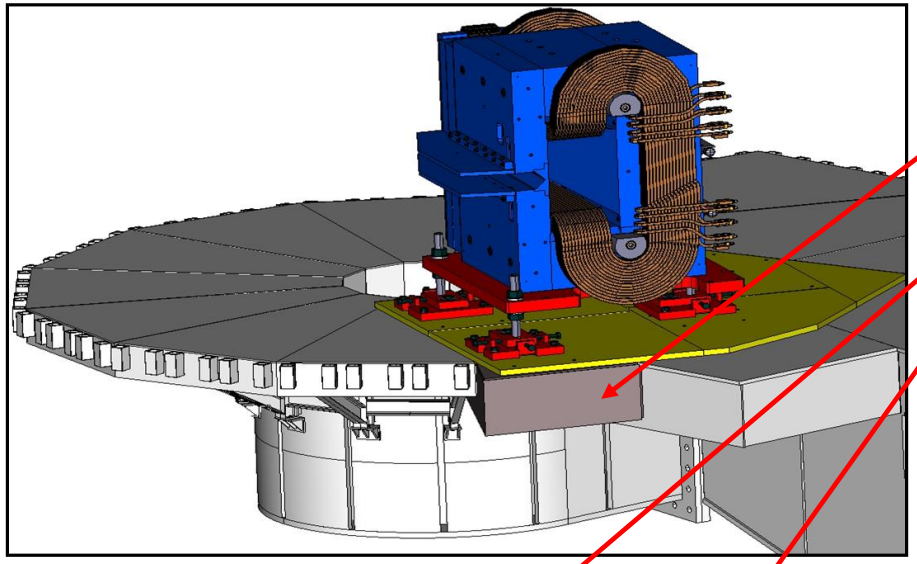

1. Wedge Section to be replaced with heavier duty section
2. C Channels replaced with box beams.
3. Support pad beefed up

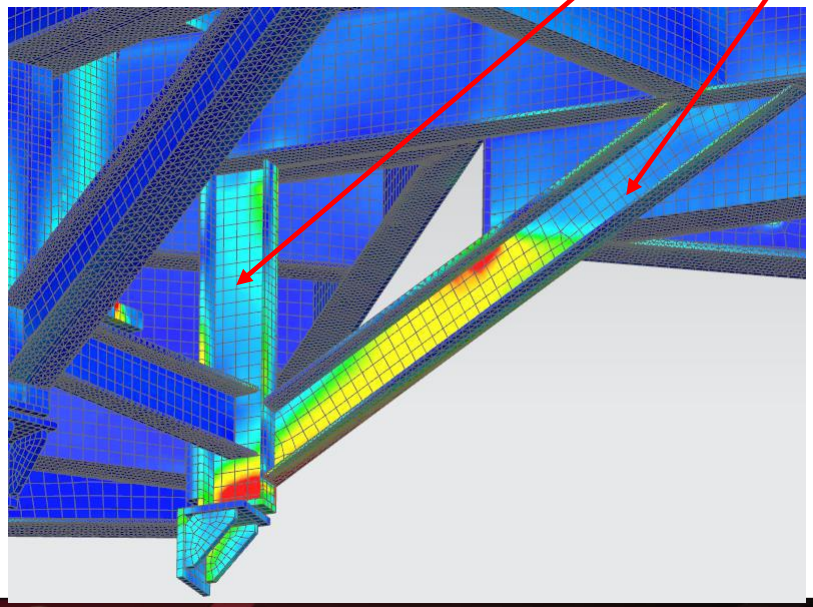

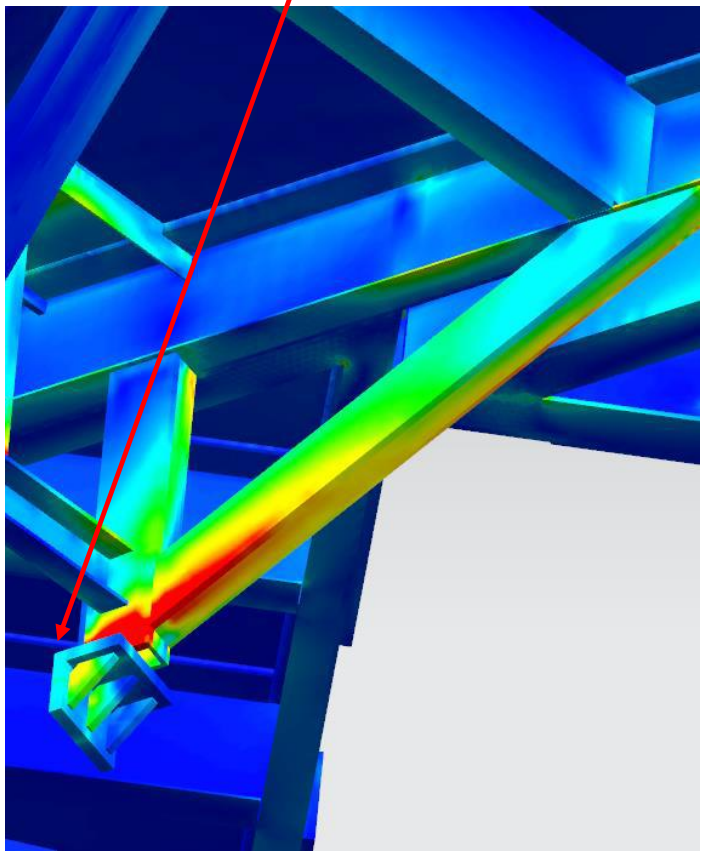

Pivot Area Re-Enforcement

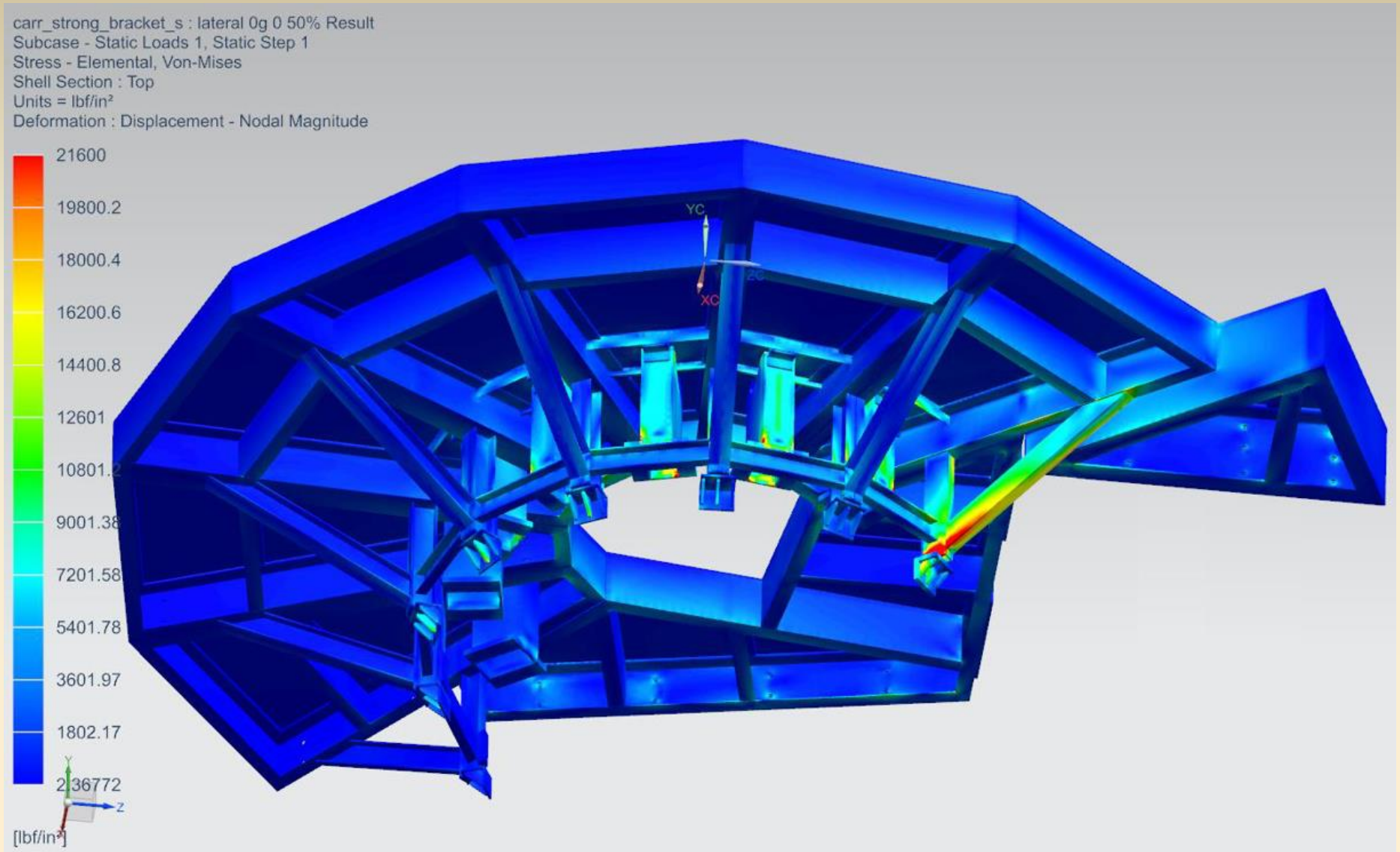

III: Platforms and Hardware

- Magnet Hardware
- Detector Platform
- Detector Rail System
- Detector Cable Support, patch panel
- Detector Lifting Fixture
- Down Stream Beam Pipe

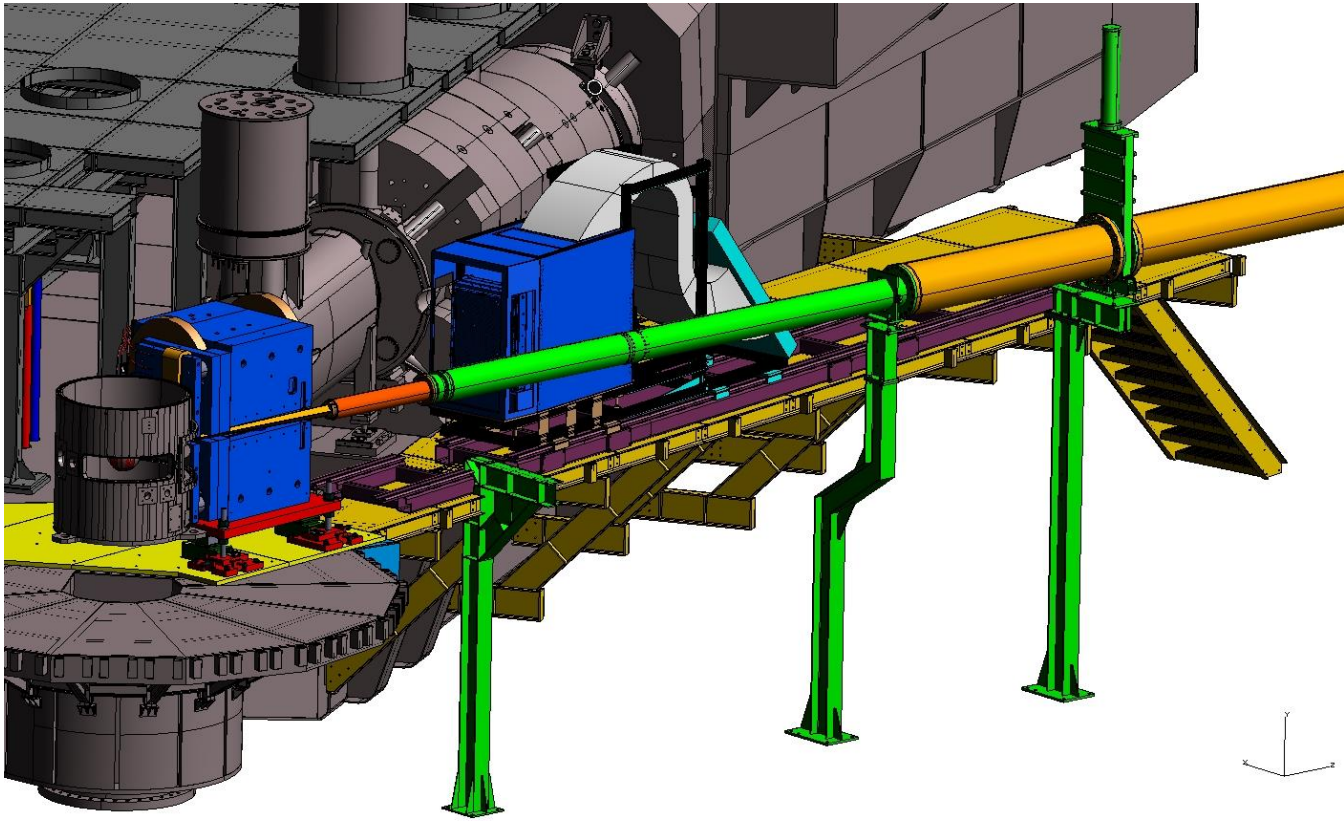

Sweeper Magnet Components

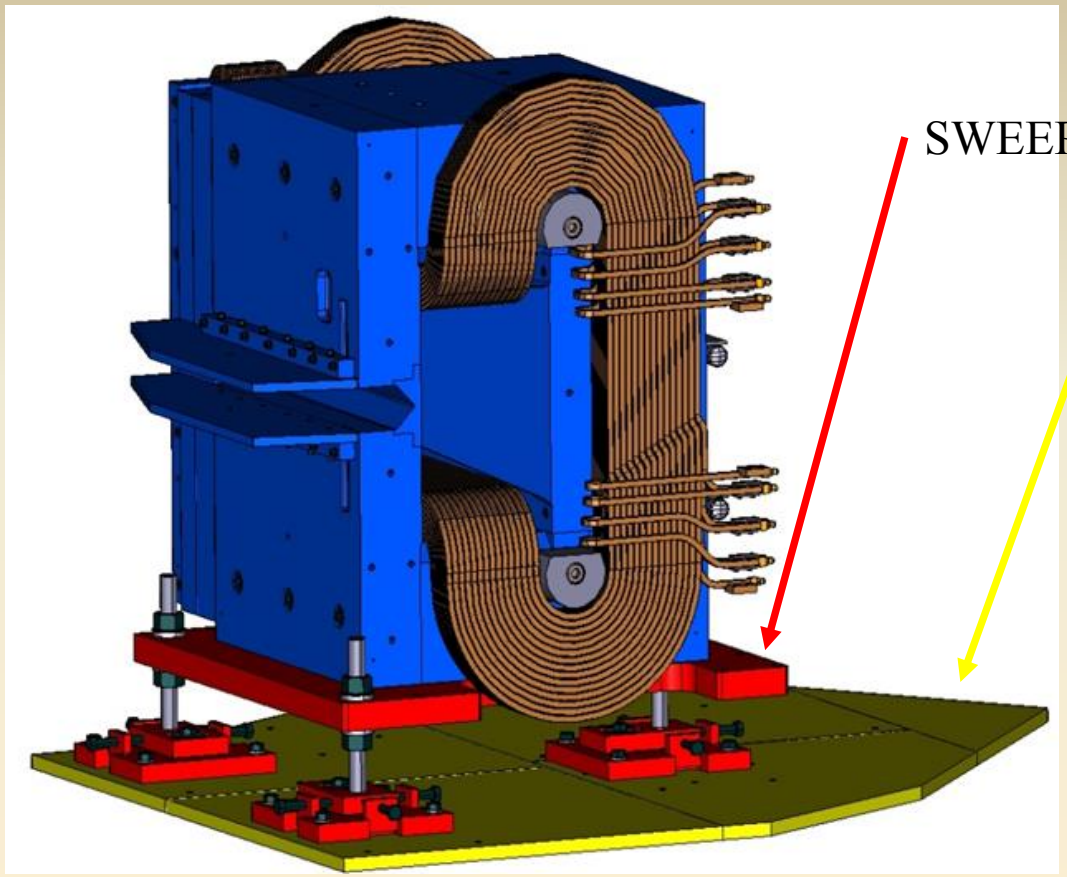

SWEEPER SUPPORT/ADJUSTERS/SLIDER ASS

SWEEPER BASE PLATE

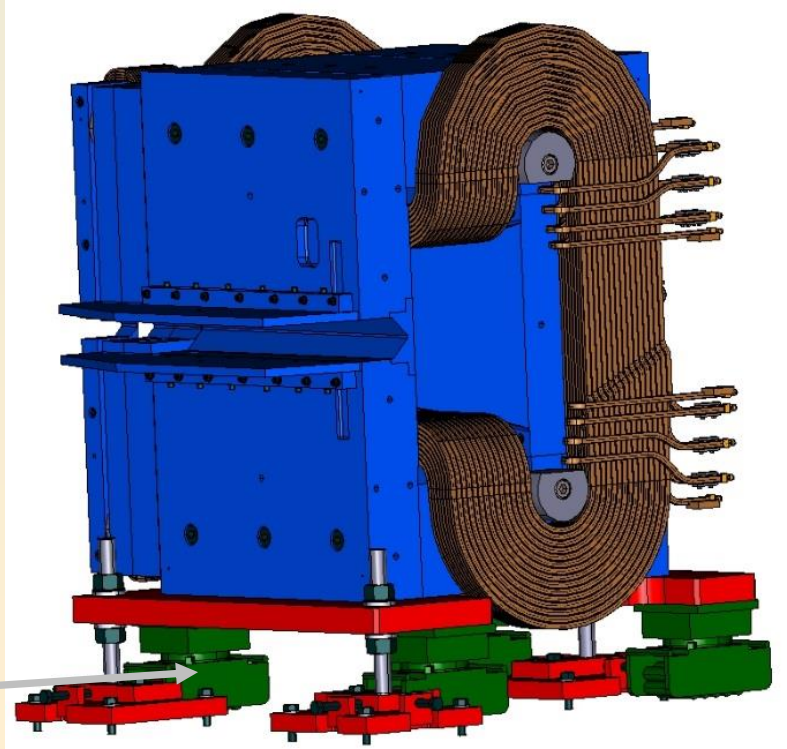

Hillman Rollers

Detector Components

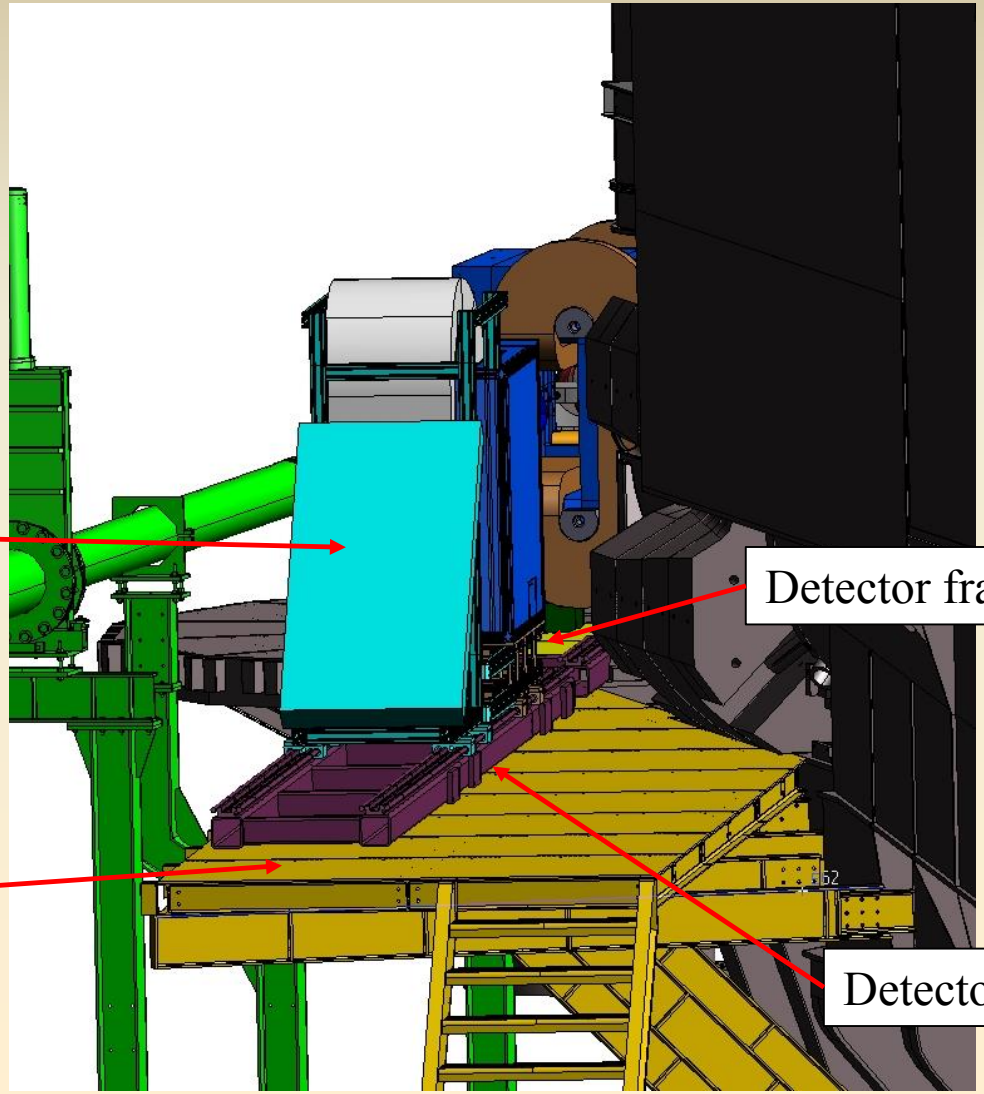

Detector Platform Hardware

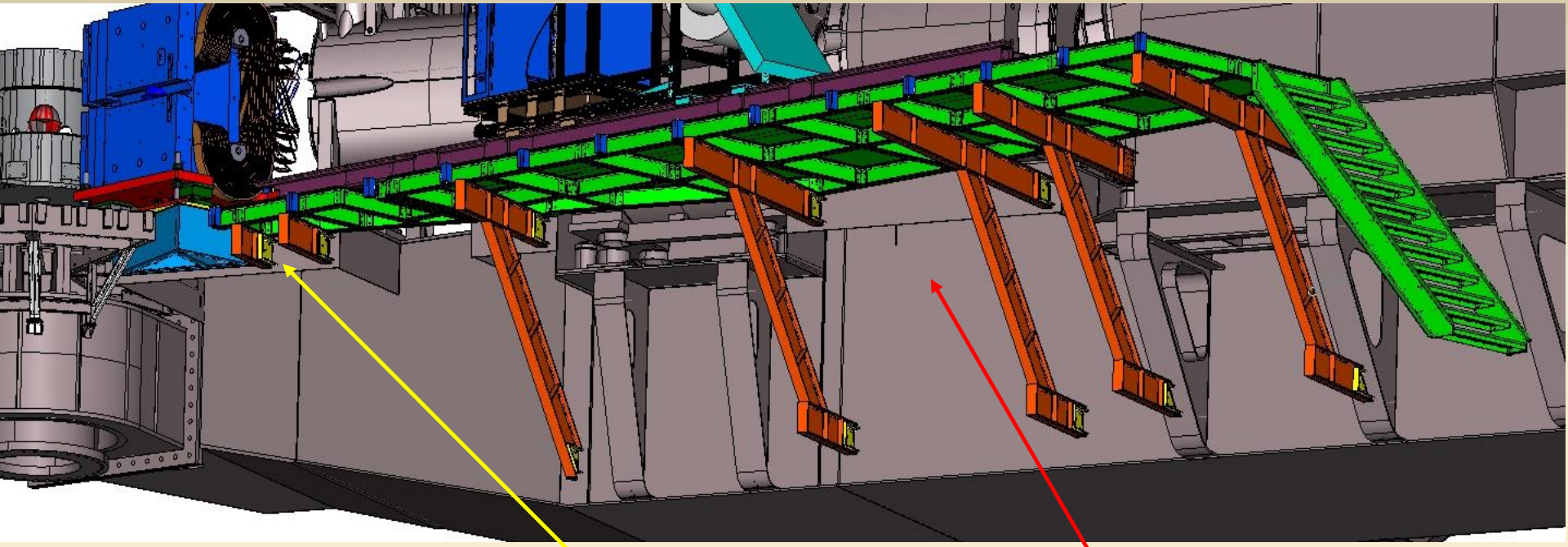

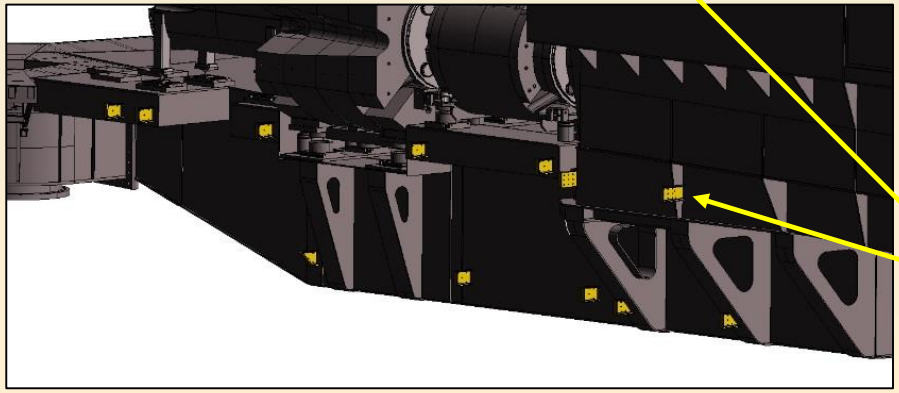

PLATFORM SUPPORTS
Bolted 7 PLACES

MOUNTING BRACKETS
WELDED TO SHMS
12 PLACES

Detector Platform FEA

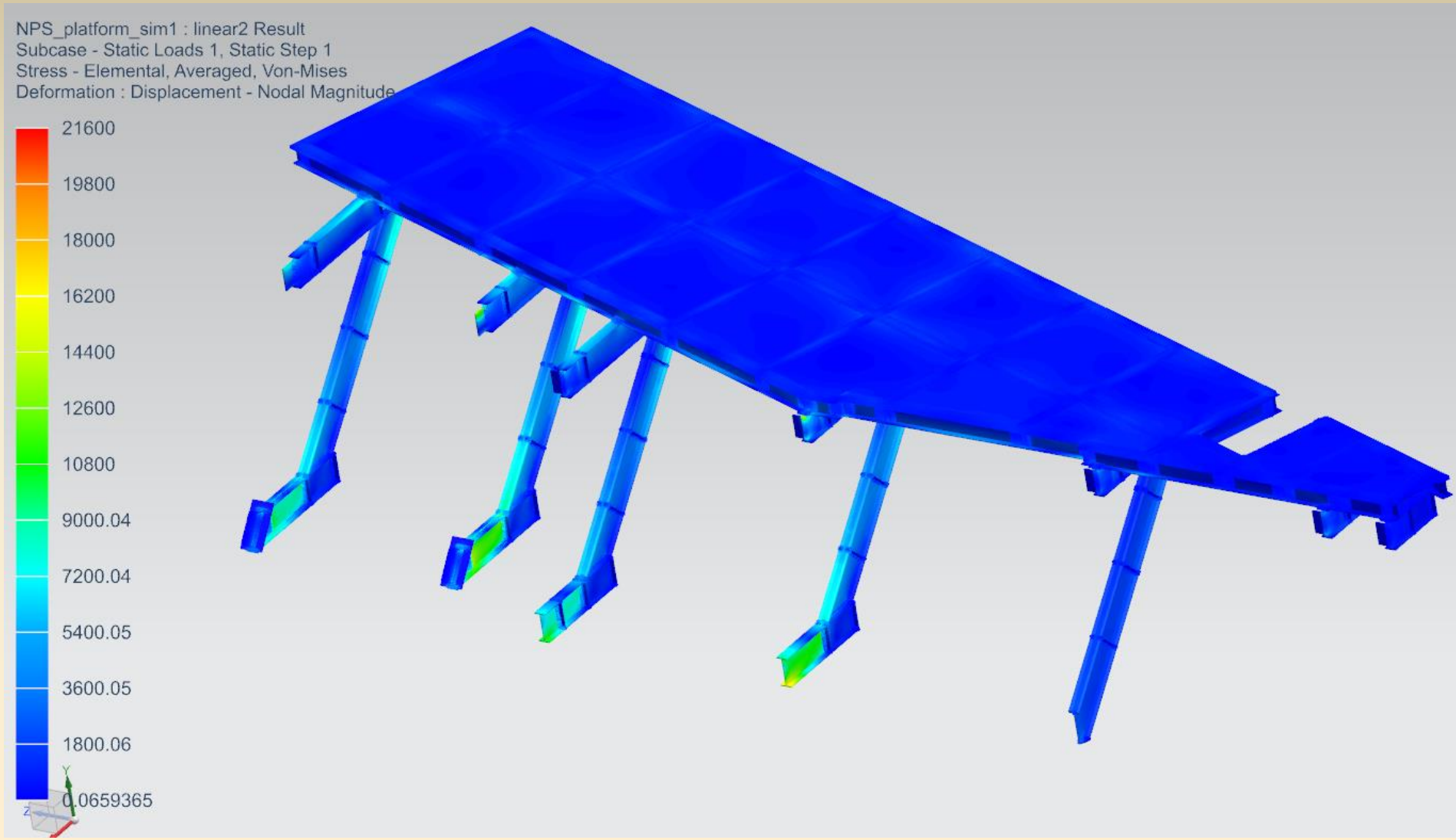

Downstream Beam Line

Large span from target to first beam support (2.5m). Support will be added.
Allows for HMS min angle of 11.5°.
Green sections are existing beam line.

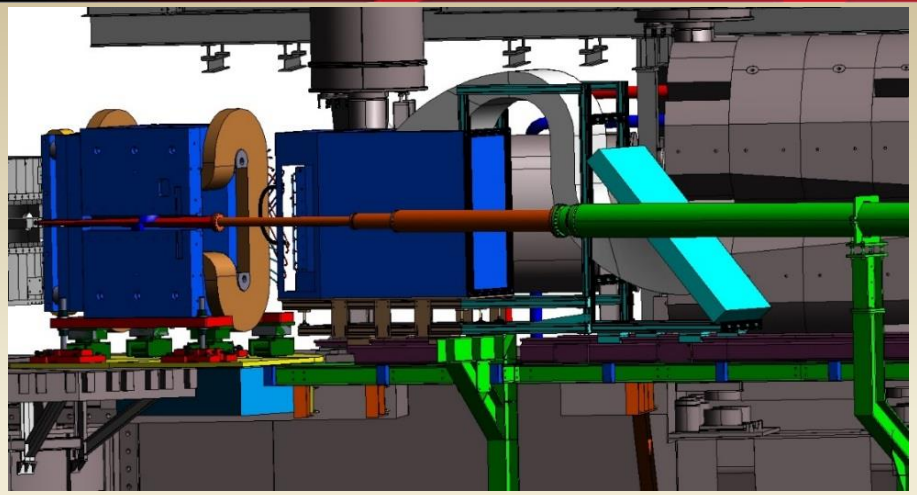

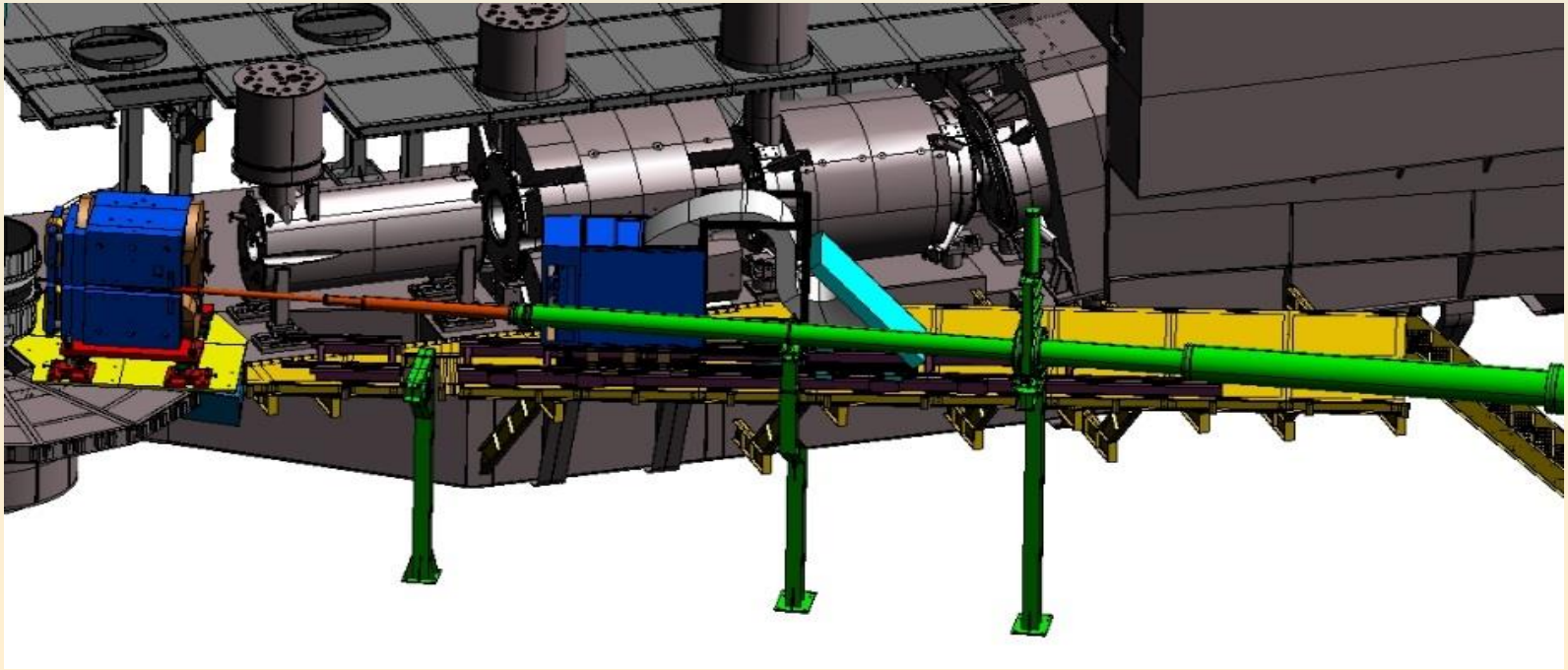

Detector Lifting Fixture

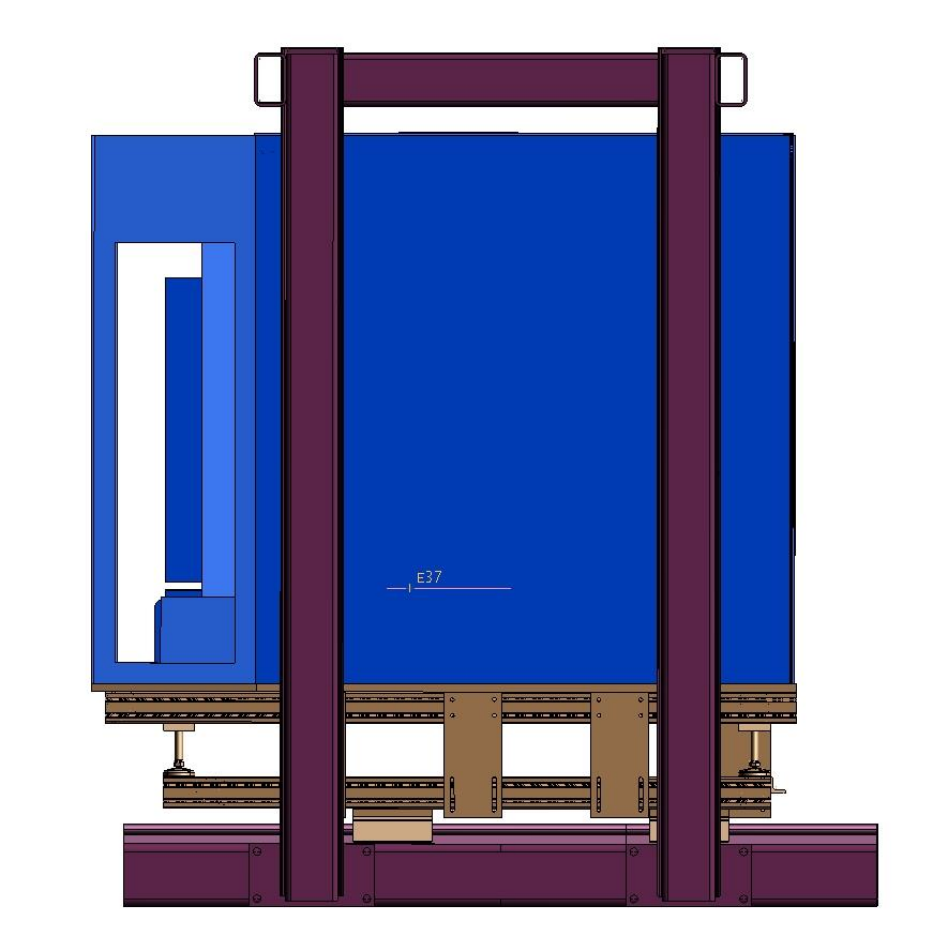

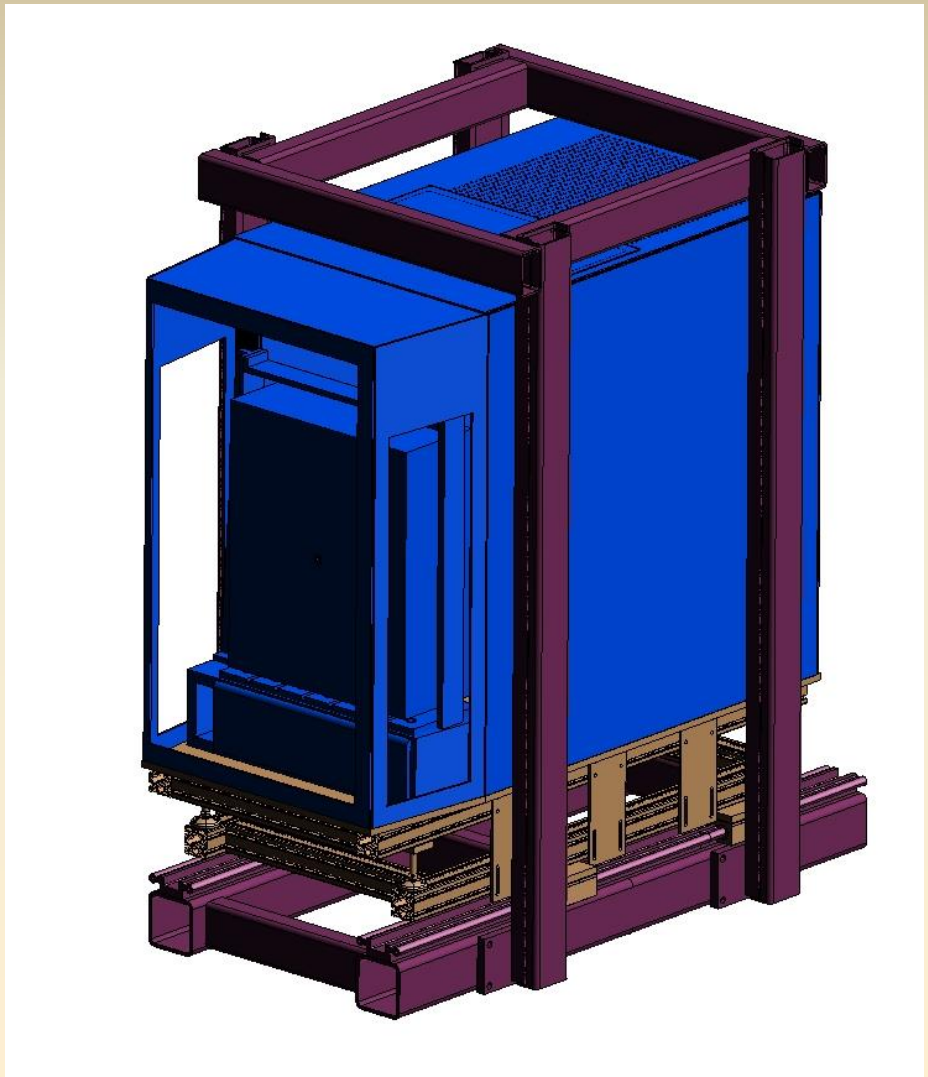

IV: NPS Initial Installation Schedule and Resources

GANTT CHART

	Task Mode	Task Name	Duration	Start	Finish	Prede	% Complete
1		NPS Pre-Installation	0 days	Tue 1/1/19	Tue 1/1/19		0%
2		Survey SHMS Side Supports locations	2 days	Mon 4/22/19	Tue 4/23/19		0%
3		Map Sweeper Magnet at full current in Hall C on Floor	20 days	Mon 1/6/20	Fri 1/31/20		0%
4		**Target Platform Re-Enforcement Procure**	**22 days**	**Mon 4/8/19**	**Tue 5/7/19**		**26%**
5		**Target Platform Wedge Section Procure**	**42 days**	**Mon 4/8/19**	**Tue 6/4/19**		**6%**
6		**Detector Platform Procure**	**72 days**	**Mon 4/8/19**	**Tue 7/16/19**		**6%**
7		**Sweeper Magnet Slide Plate Procure**	**47 days**	**Mon 4/8/19**	**Tue 6/11/19**		**9%**
8		**Simple Project Plan**	**73 days**	**Mon 4/8/19**	**Wed 7/17/19**		**8%**
9		**Simple Project Plan**	**53 days**	**Mon 4/8/19**	**Wed 6/19/19**		**14%**
10		**Down Stream Beam Line #1 Procure**	**59.7 days**	**Mon 4/8/19**	**Fri 6/28/19**		**0%**
11		**Simple Project Plan**	**15 days**	**Mon 4/8/19**	**Fri 4/26/19**		**0%**
12		NPS Install start date	0 days	Wed 5/6/20	Wed 5/6/20		0%
13		DS Beamline removal	1 day	Wed 5/6/20	Wed 5/6/20	12	0%
14		Target Platform Re-enforcement Install	7 days	Thu 5/7/20	Fri 5/15/20	13	0%
15		Target Platform Wedge Section Install	7 days	Thu 5/7/20	Fri 5/15/20	13	0%
16		**HB removal**	**9.7 days**	**Wed 5/6/20**	**Wed 5/20/20**	**12**	**0%**
17		Detector Platform Braces Install	10 days	Mon 5/18/20	Fri 5/29/20	15	0%
18		Sweeper Magnet Slide Plate Install	1 day	Wed 5/20/20	Thu 5/21/20	16	0%
19		Sweeper Magnet Slide Plate Alignment	2 days	Thu 5/21/20	Mon 5/25/20	18	0%
20		Sweeper Magnet Support Installation	1 day	Mon 5/25/20	Tue 5/26/20	19	0%
21		Crane Sweeper Magnet onto SHMS Platform	1 day	Tue 5/26/20	Wed 5/27/20	20	0%
22		Survey and align Sweeper magnet	3 days	Wed 5/27/20	Mon 6/1/20	21	0%
23		Detector Platform Install	1 day?	Wed 5/20/20	Thu 5/21/20	16	0%
24		Detector Rail Assy Install	2 days	Thu 5/21/20	Mon 5/25/20	23	0%
25		Detector Rail Assy Survey / Alignment	4 days	Mon 5/25/20	Fri 5/29/20	24	0%
26		Detector Installation on SHMS	1 day	Fri 5/29/20	Mon 6/1/20	25	0%
27		Detector Survey / Alignment	2 days	Mon 6/1/20	Wed 6/3/20	26	0%
28		Cabling Support Install	4 days	Wed 6/3/20	Tue 6/9/20	27	0%
29		Cable layout	3 days	Tue 6/9/20	Fri 6/12/20	28	0%
30		Cable termination	8 days	Fri 6/12/20	Wed 6/24/20	29	0%
31		Cable connections Calorimeter/Patch Panels/Shield Hut	10 days	Wed 6/24/20	Wed 7/8/20	30	0%
32		PSU and DC Bus Install	2 days	Mon 6/1/20	Wed 6/3/20	22	0%
33		Install Down stream Beam line	2 days	Wed 7/8/20	Fri 7/10/20	31	0%
34		NPS Scheduled to Run date	0 days	Mon 11/2/20	Mon 11/2/20	33	0%

HB Removal from SHMS

GANTT CHART

	Task Mode	Task Name	Duration	Start	Finish	Pr
1		**HB Removal**	**9.7 days**	**Wed 5/6/20**	**Wed 5/20/20**	
2		Shut Off Cryo to magnet	0 days	Wed 5/6/20	Wed 5/6/20	
3		Open Warm Return Valve	0.1 days	Thu 5/7/20	Thu 5/7/20	2
4		Un-sting and remove U-Tubes	1 day	Thu 5/7/20	Fri 5/8/20	3
5		Magnet Self Warms to 80K	2 days	Thu 5/7/20	Fri 5/8/20	2
6		Use HX to warm magnet to 280K	3 days	Mon 5/11/20	Wed 5/13/20	5
7		Vent Spectrometer Vacuum	0.2 days	Thu 5/7/20	Thu 5/7/20	2
8		Spoil HB Insulating Vacuum	0.2 days	Thu 5/14/20	Thu 5/14/20	6
9		Transition off HX	0.5 days	Thu 5/14/20	Thu 5/14/20	8
10		Plumb in Helium and LN2 temp relief devices	0.5 days	Thu 5/14/20	Fri 5/15/20	9
11		Disconnect Signal Cables	1 day	Thu 5/14/20	Fri 5/15/20	9
12		De-Activate HB controls in PLC	0.5 days	Fri 5/15/20	Mon 5/18/20	11
13		Remove Front Shielding	1 day	Thu 5/7/20	Thu 5/7/20	2
14		Remove Front Beam Pipe	1 day	Fri 5/8/20	Fri 5/8/20	13
15		Remove Back Collimator	1 day	Mon 5/11/20	Mon 5/11/20	14
16		Remove Current Lead Shielding	0.5 days	Mon 5/11/20	Mon 5/11/20	5
17		Disconnect DC bus water line	0.5 days	Mon 5/11/20	Mon 5/11/20	16
18		Disconnect & Remove DC Bus leads	0.5 days	Tue 5/12/20	Tue 5/12/20	17
19		Disconnect Current Lead He Flow Lines	0.5 days	Tue 5/12/20	Tue 5/12/20	18
20		Disconnect and remove warm return line	0.25 days	Fri 5/15/20	Fri 5/15/20	10
21		Disconnect and de-power CL Mass Flow controllers/Heaters	0.25 days	Fri 5/15/20	Fri 5/15/20	20
22		register magnet feet to SHMS deck	1 day	Fri 5/15/20	Mon 5/18/20	21
23		Hook up Crane to Magnet	0.25 days	Mon 5/18/20	Mon 5/18/20	22
24		Unhook foot pads & Prep for removal	0.25 days	Mon 5/18/20	Tue 5/19/20	23
25		Crane off HB Magnet to floor	0.5 days	Tue 5/19/20	Tue 5/19/20	24
26		Secure HB Magnet offline	1 day	Tue 5/19/20	Wed 5/20/20	25

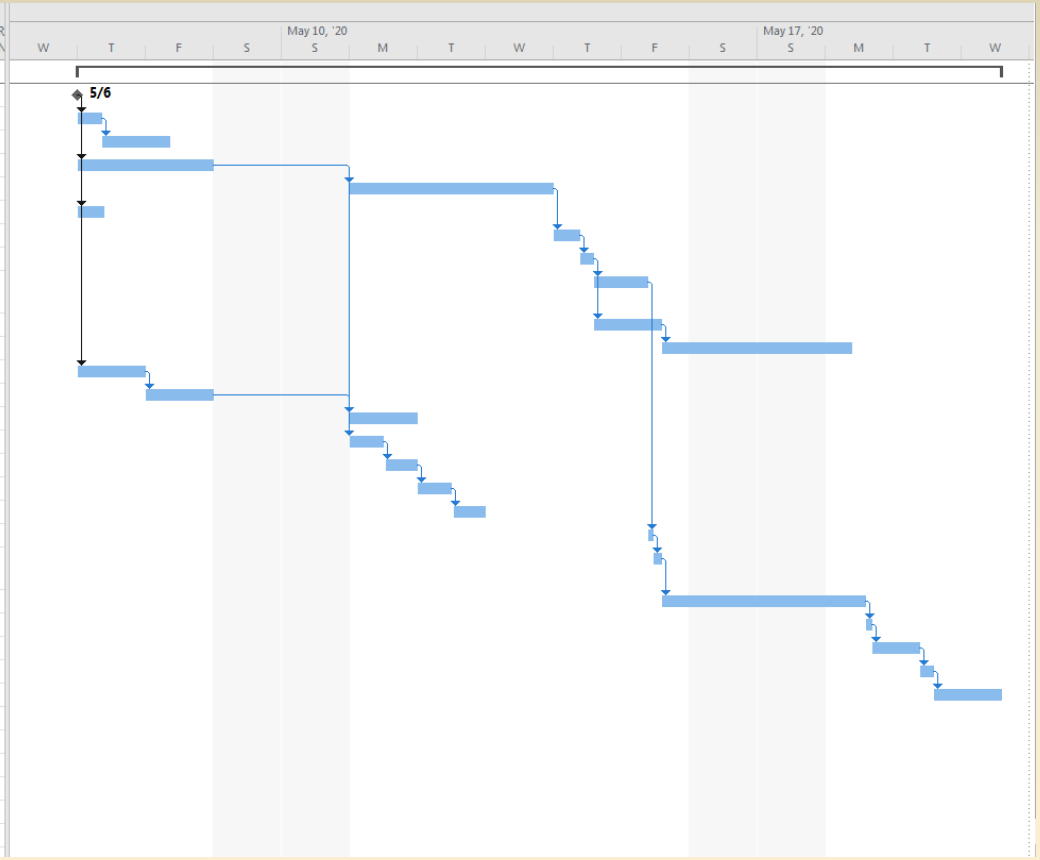

Manpower Resources

	Resource Name	Type	Material	Initials	Group
1	Mike F	Work		M	Design
2	Paulo M	Work		P	Design
3	Bert M	Work		B	Design
4	Steven L	Work		S	Engineering
5	Eric S	Work		E	Engineering
6	Larry	Work		L	Tech
7	Jerry	Work		J	Tech
8	Stan	Work		S	Tech
9	Rob	Work		R	Tech
10	Walter	Work		W	Coordinator
11	Survey	Work		S	Survey Alignment
12	Cryo	Work		C	Cryo
13	Over Head Crane	Work		O	Equipment
14	Jack S	Work		J	Spect Support Group
15	Joe B	Work		J	Spect Support Group
16	Ethan B	Work		E	Spect Support Group
17	Andrew K	Work		A	Spect Support Group
18	Chuck L	Work		C	Spect Support Group

CE SHEET

Summary

- NPS Systems have been identified and design work is under way.
- Engineering FEA shows the need for re-enforcement of the SHMS around the pivot area.
- Schedules and resources for initial installation of NPS are being developed and tuned.

Backup slides

Kinematics of SI pion (E12-13-10) (1ST RUN-A)

#	NPS ANGLE Θ_γ	HMS ANGLE Θ_e	D_{mag}	D_{calo}	Magnet Angle from CALO	Field Clamps	Corrector Coils
3 (=B)	16.2	11.7	1.60	3.00	5.5	REMOVED	
5 (~C)	12.4	15.3	1.60	3.00	5.5	REMOVED	
7	21.7	11.7	1.60	3.00	5.5		
8	16.6	15.6	1.60	3.00	5.5	REMOVED	
13	6.3	27.9	1.60	6.00	4.0		
16	6.3	17.3	1.60	6.00	4.0	REMOVED	

Field Clamps removed for Spectrometer's separation angle less than 32.5°

Kinematics of SI pion (E12-13-007) (1ST RUN-B)

#	NPS ANGLE Θ_γ	HMS ANGLE Θ_e	D_{mag}	D_{calo}	Magnet Angle from CALO	Field Clamp	Corrector Coils
B	16.20	11.70	1.60	3.00	5.5	REMOVED	
C	12.44	15.38	1.60	3.00	5.5	REMOVED	
D	7.93	24.15	1.60	3.00	5.5	REMOVED	
E	16.57	15.65	1.60	6.00	4.0	REMOVED	
F	17.23	17.84	1.60	6.00	4.0		

Kinematics of WACS (E12-14-003)/Pion 2ND RUN

#	NPS ANGLE Θ_γ	HMS ANGLE Θ_e	D_{mag}	D_{calo}	Magnet Angle from CALO	Field Clamp	Corrector Coils
4A	14.2	40.1	1.85	9.00	5.5		
4B	17.9	33.7	1.85	7.00	5.5		
4C	22.5	27.8	1.85	5.00	5.5		
4D	26.9	23.7	1.40	3.50	5.5	REMOVED	REMOVED
4E	34.0	18.9	1.40	3.00	5.5	REMOVED	REMOVED
5A	11.0	41.7	1.85	11.00	5.5		
5B	13.8	35.3	1.85	9.00	5.5		
5C	16.9	30.0	1.85	7.50	5.5		
5D	19.7	26.3	1.85	6.00	5.5		
5E	29.9	17.8	1.40	3.25	5.5	REMOVED	REMOVED

NPS placed on SHMS Left side Field Clamps not needed

SI Pion

E12-13-10 #3

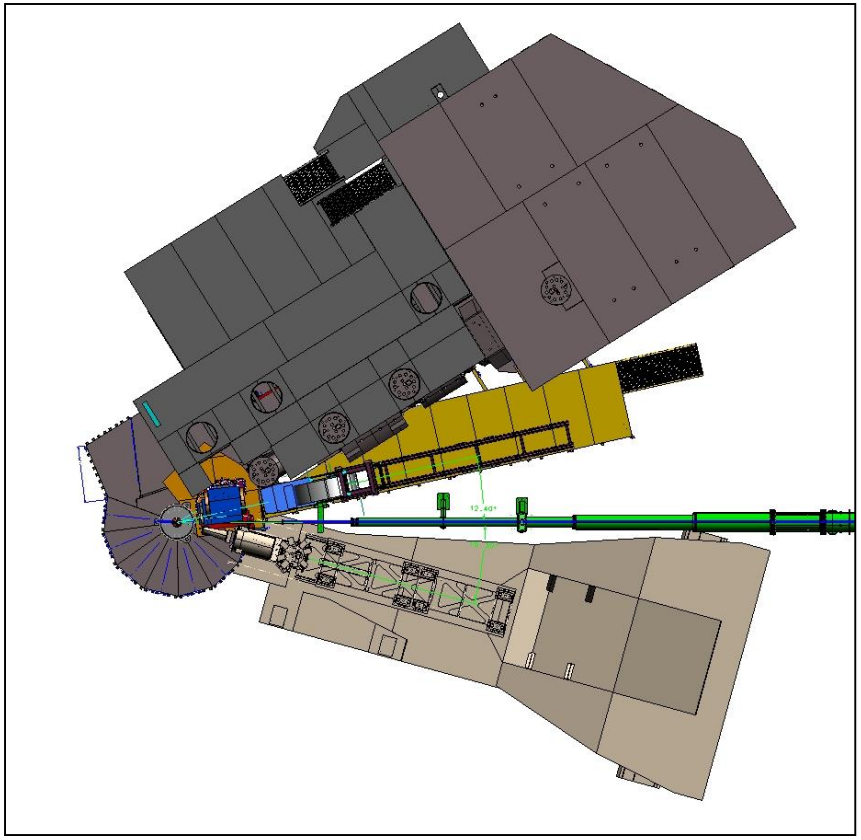

E12-13-10 #5

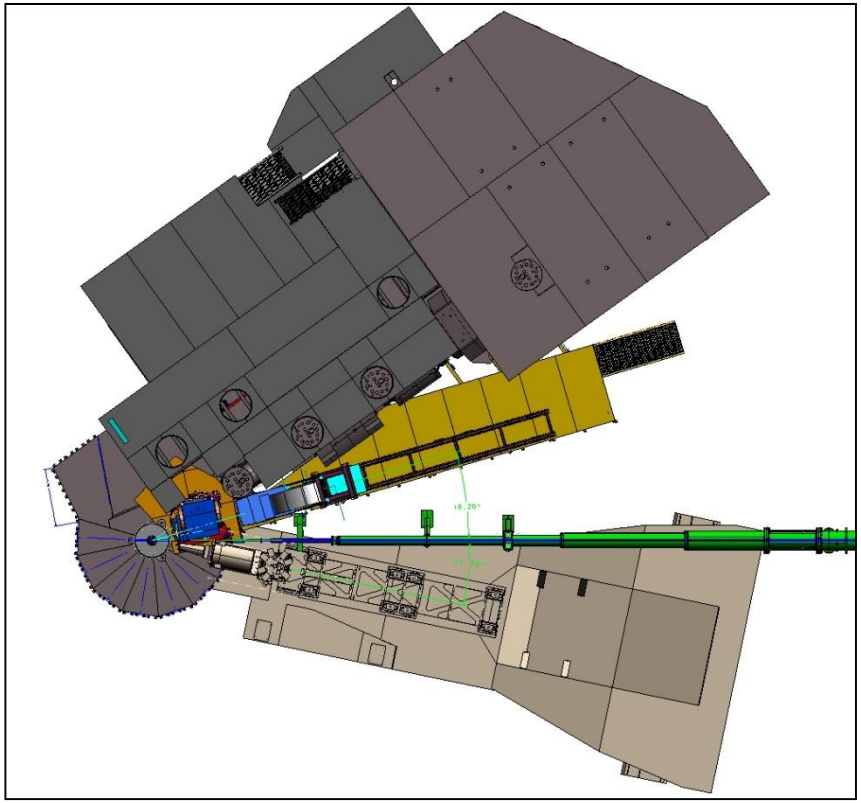

SI Pion

E12-13-10 #7

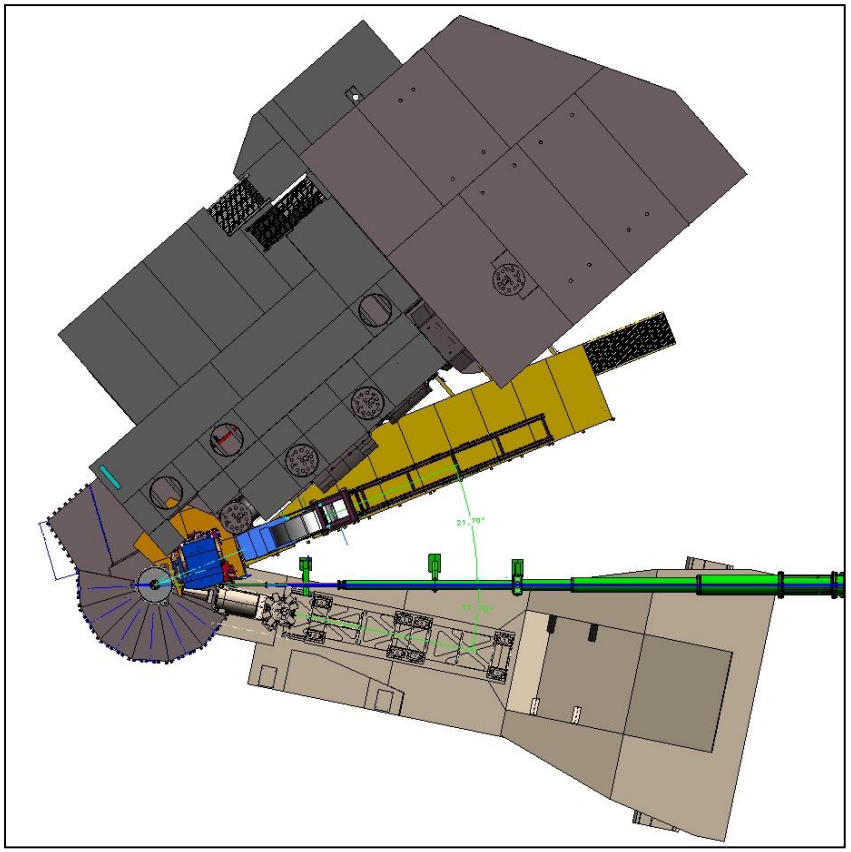

E12-13-10 #8

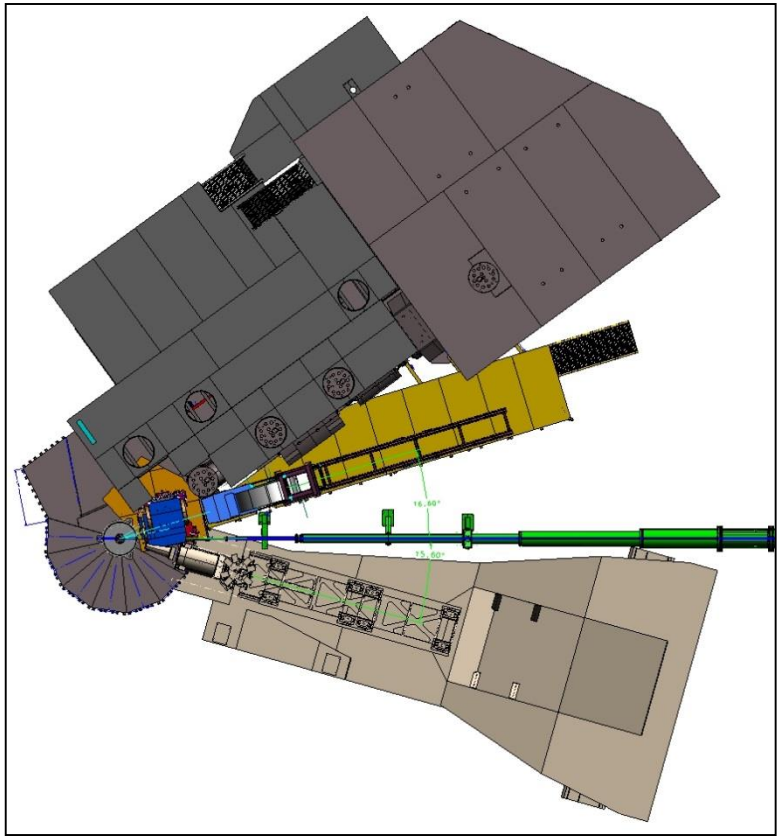

SI Pion

E12-13-10 #13

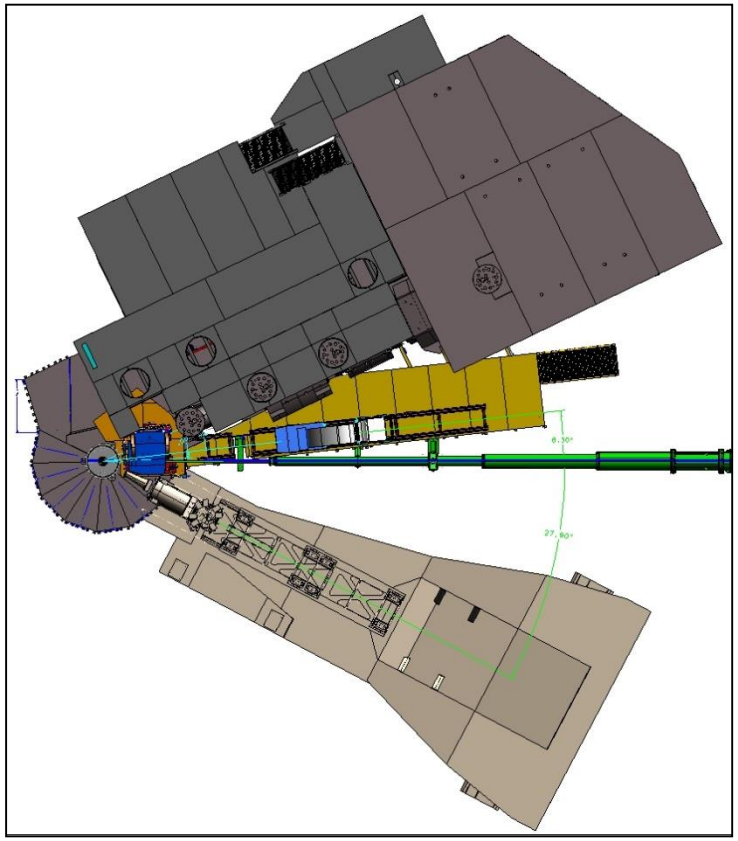

E12-13-10 #16

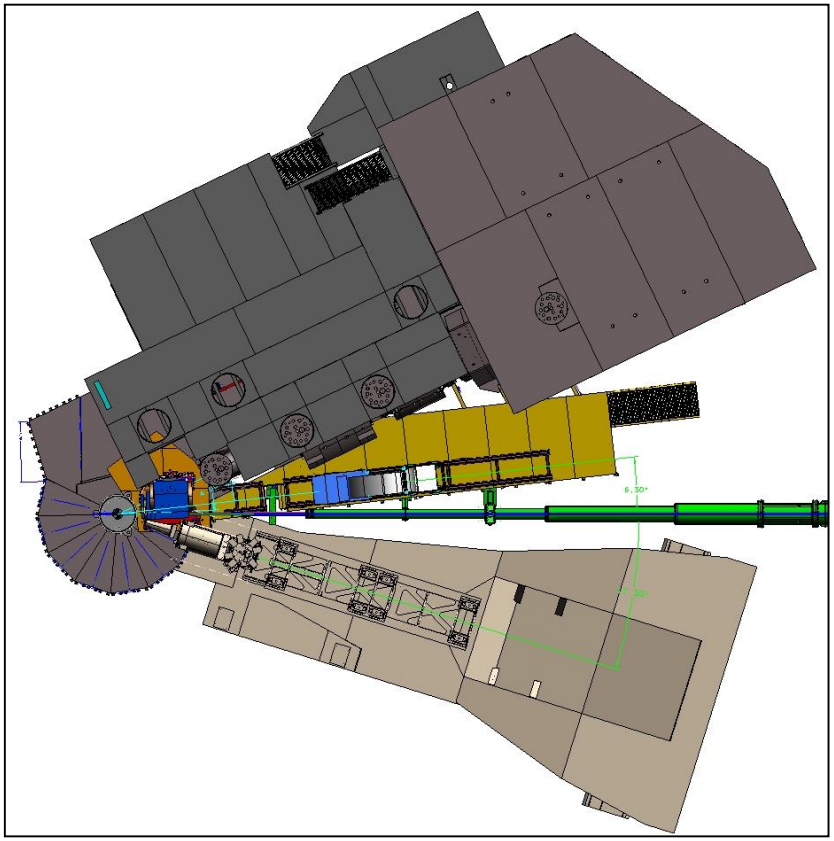

SI Pion

E12-13-007 #D

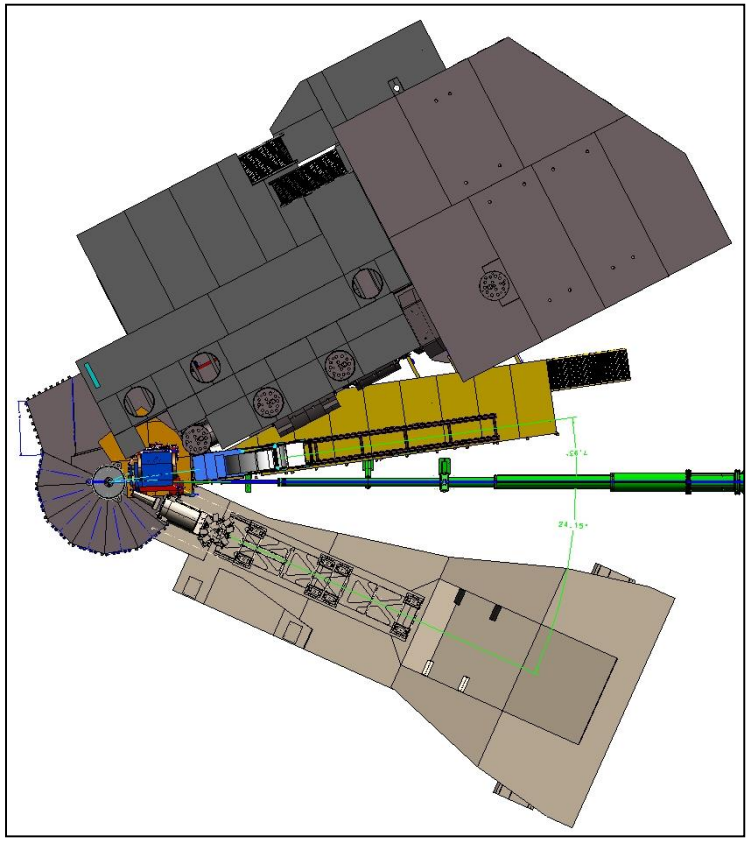

E12-13-007 #E

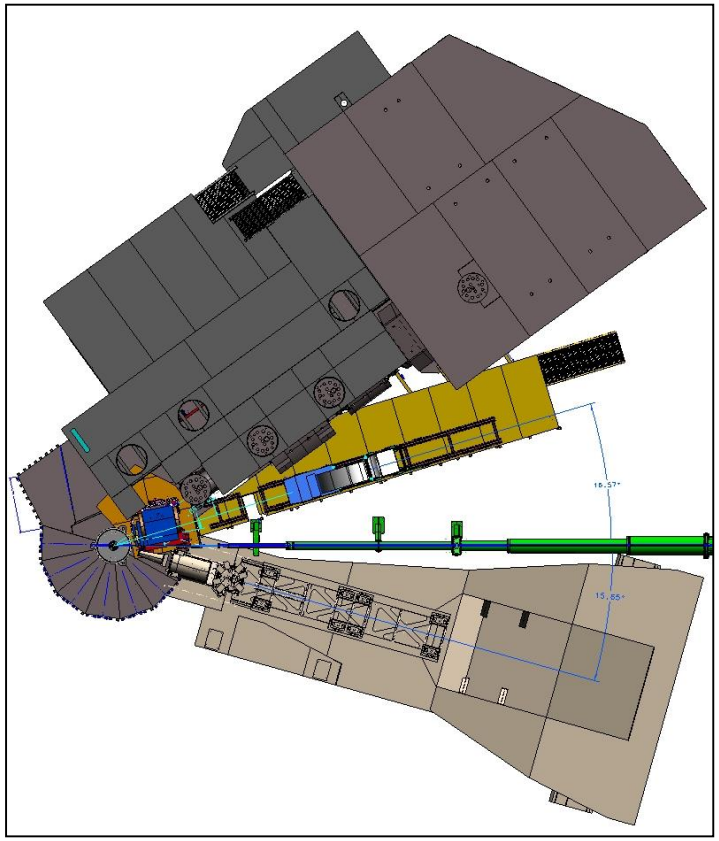

SI Pion

E12-13-007 #F

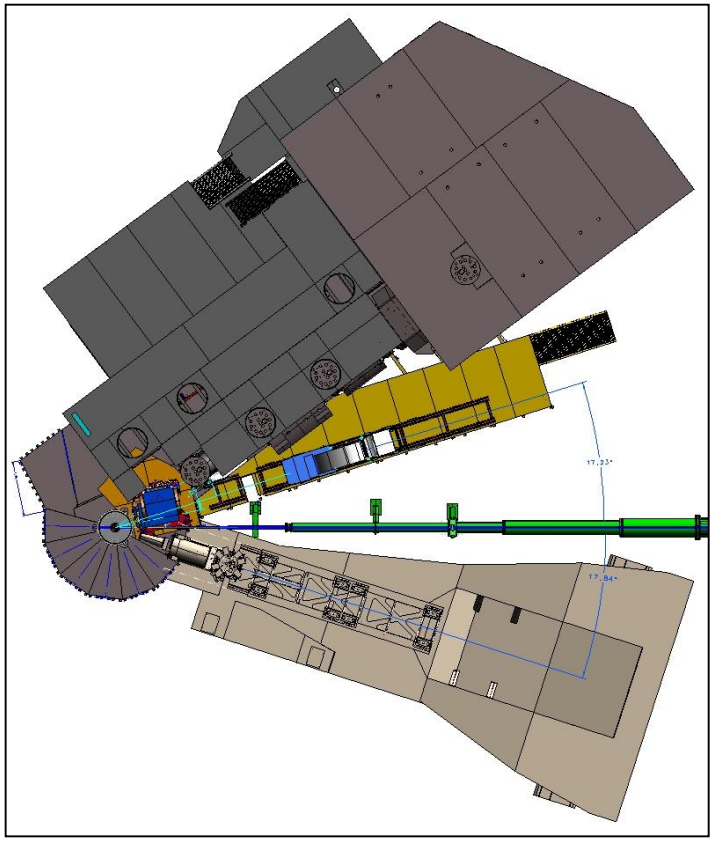

WACS

E12-14-003 #4A

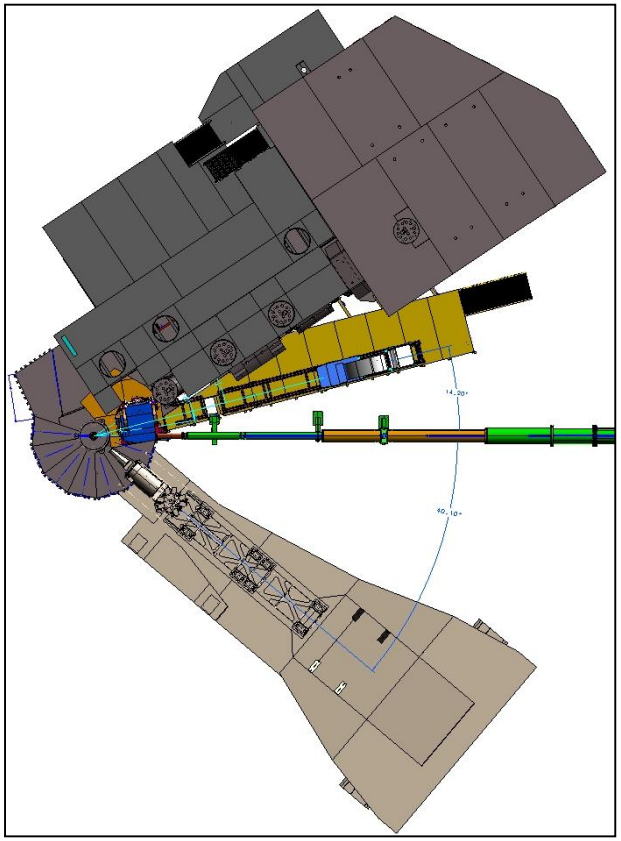

E12-14-003 #4B

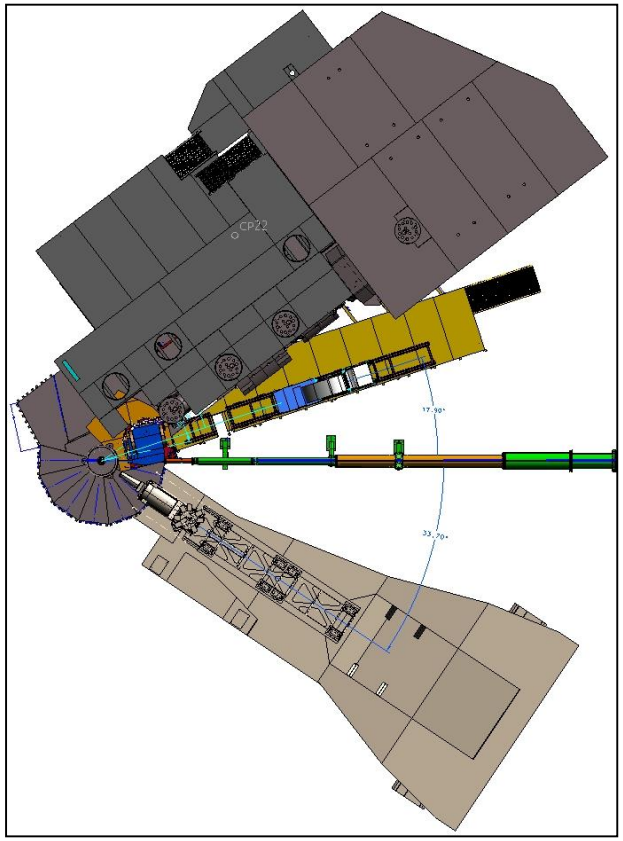

WACS

E12-14-003 #4C

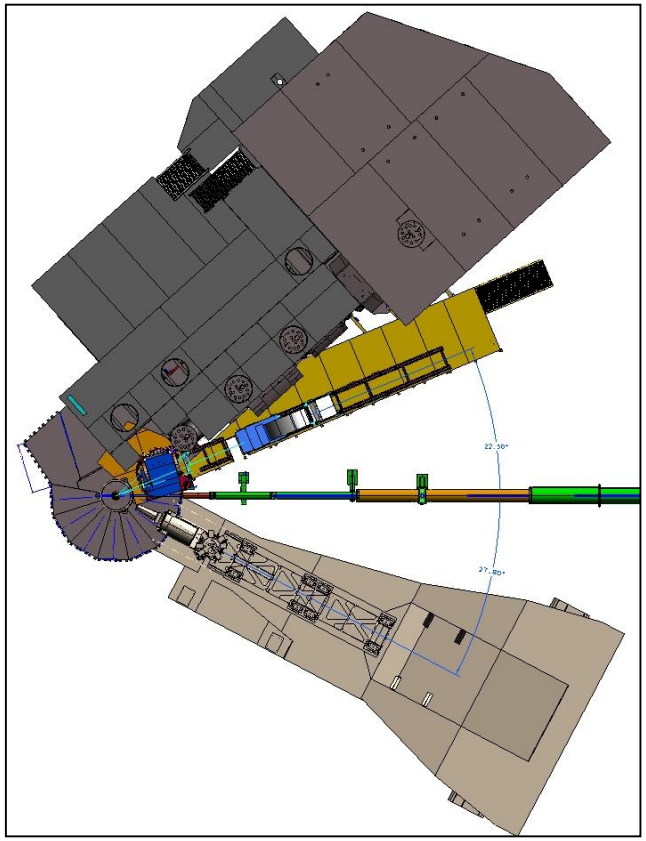

E12-14-003 #4D

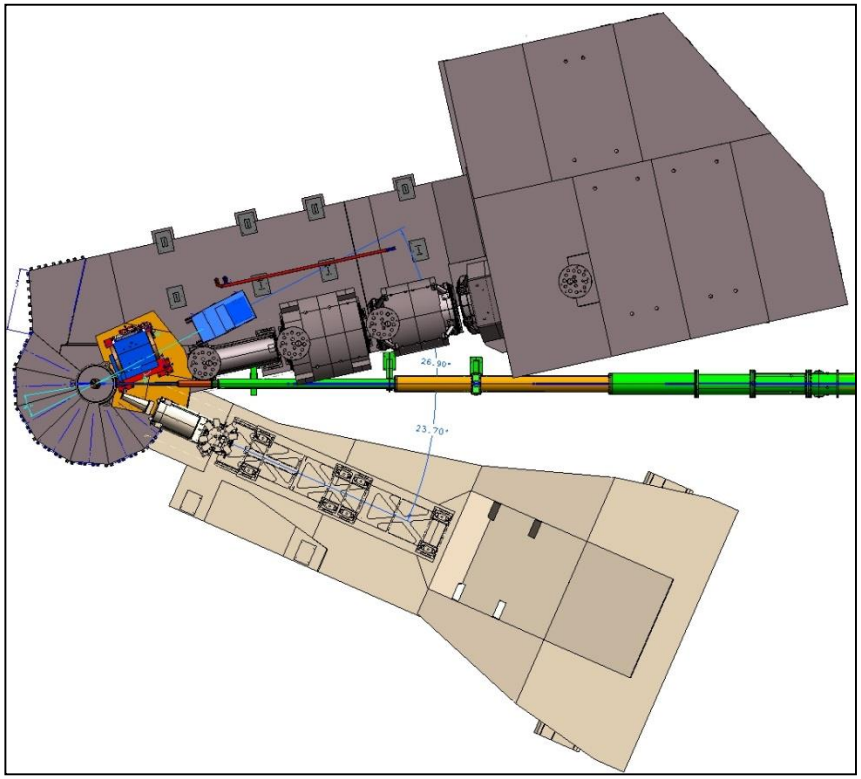

WACS

E12-14-003 #4E

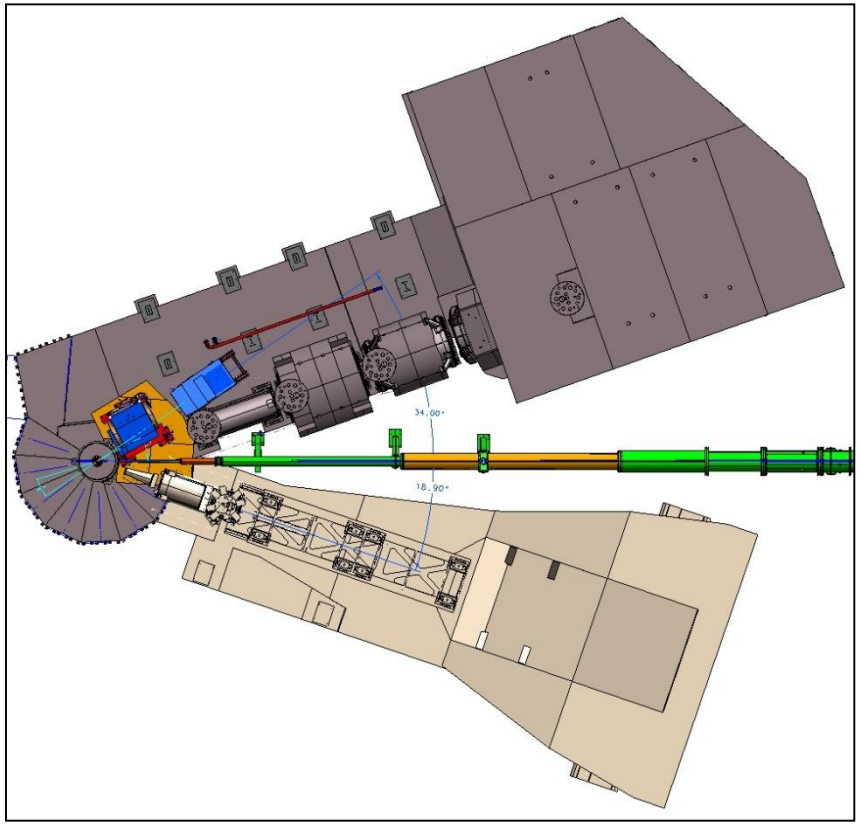

E12-14-003 #5E

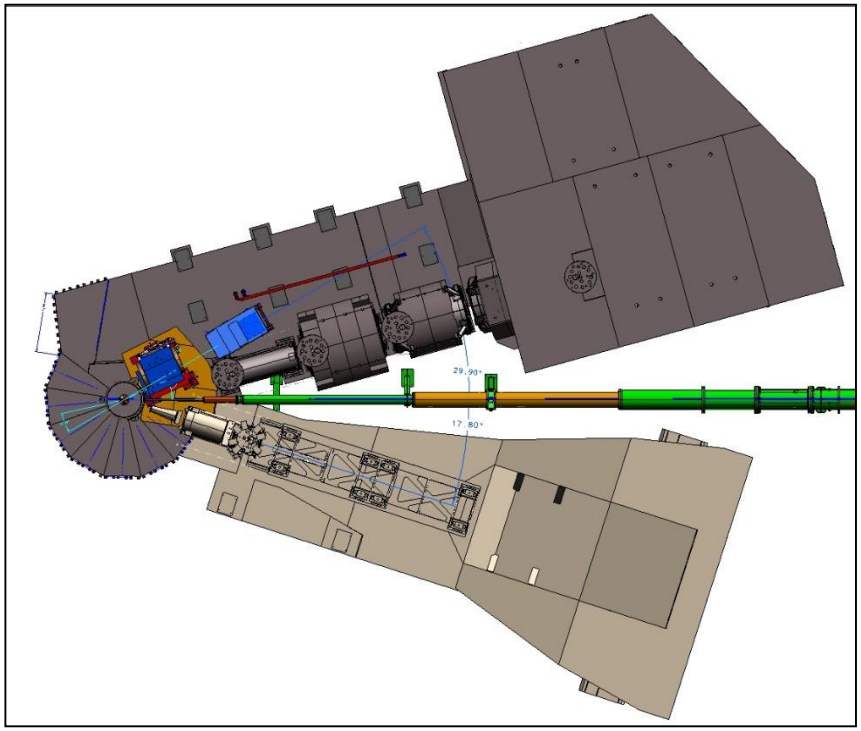

WACS

E12-14-003 #5A

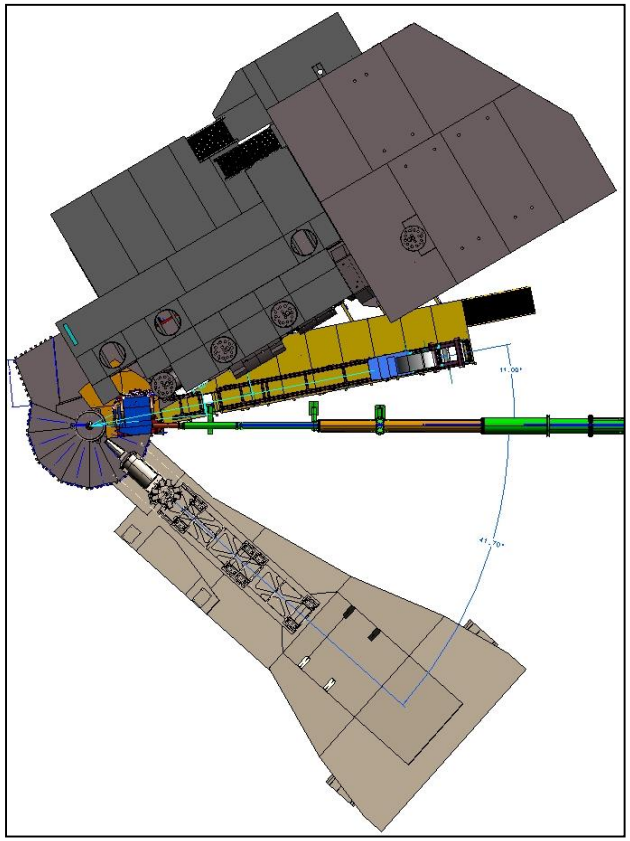

E12-14-003 #5B

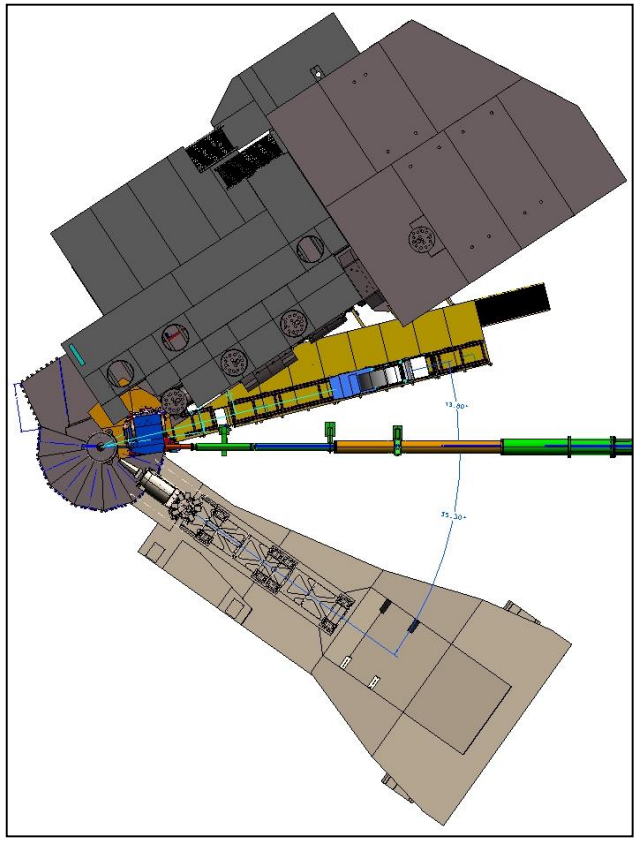

WACS

E12-14-003 #5C

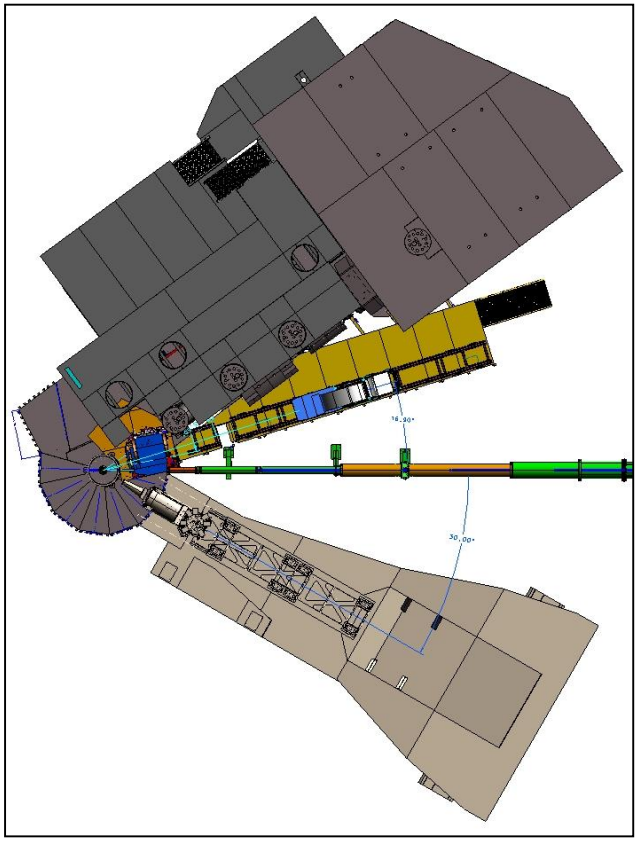

E12-14-003 #5D

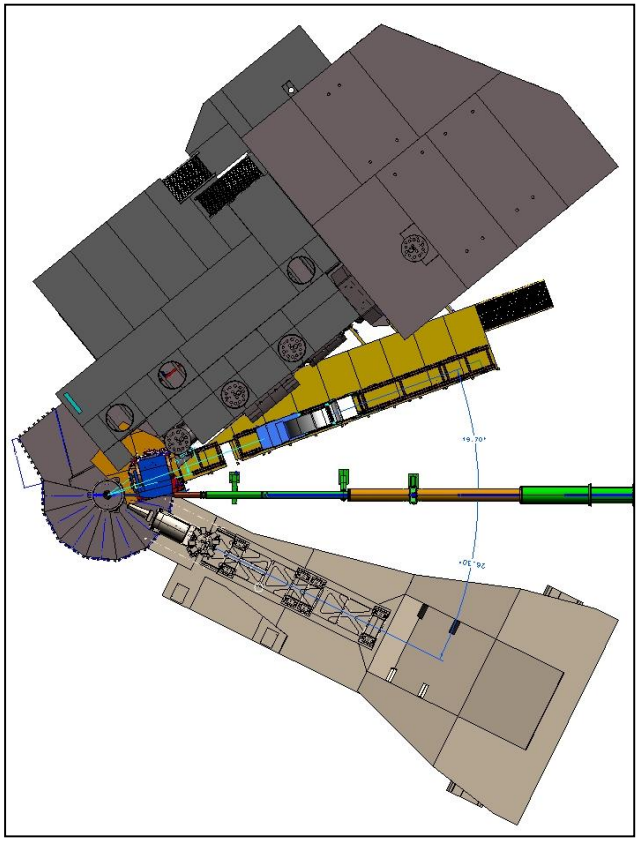

NPS SHMS Left Side

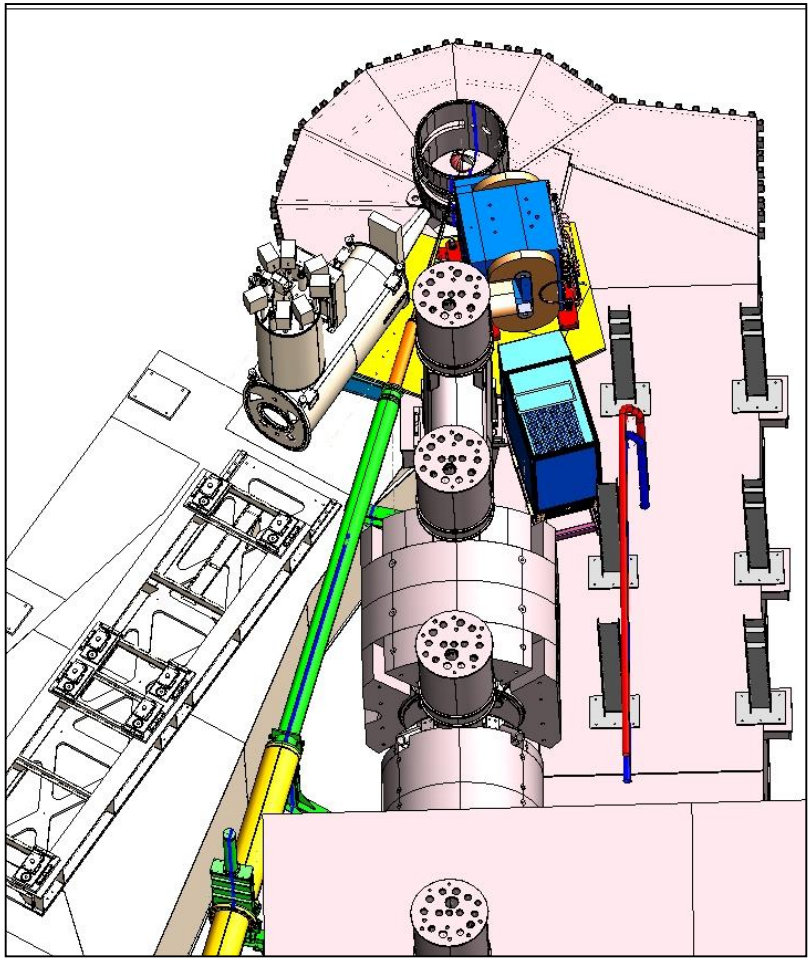

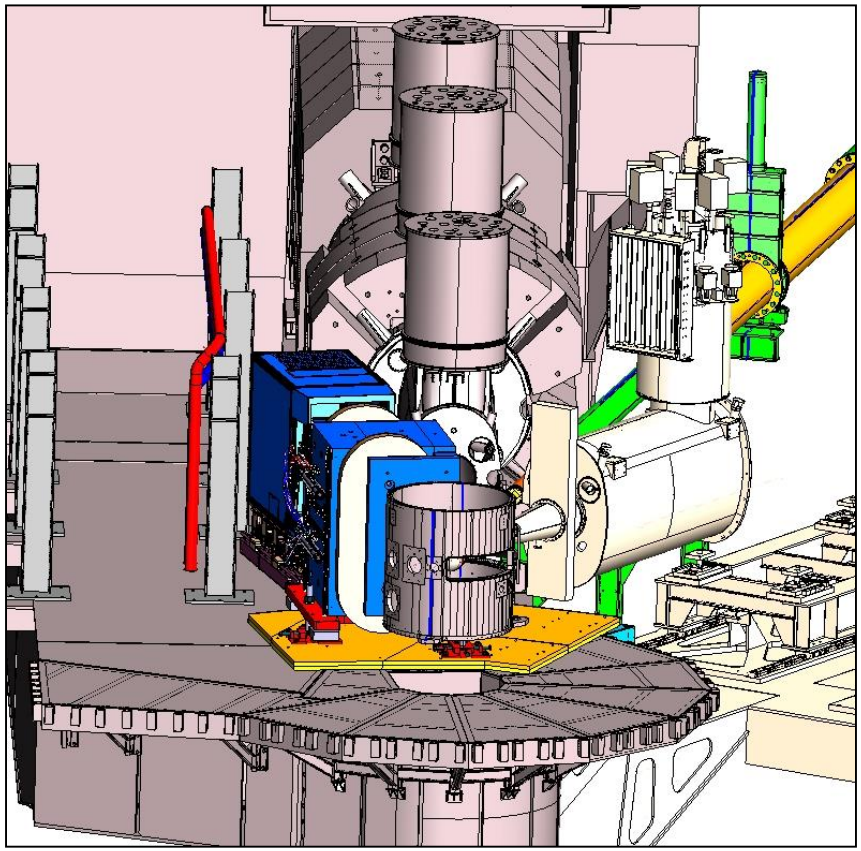

8.5° @ 3m, Sweeper 4.5° and Not Rotated

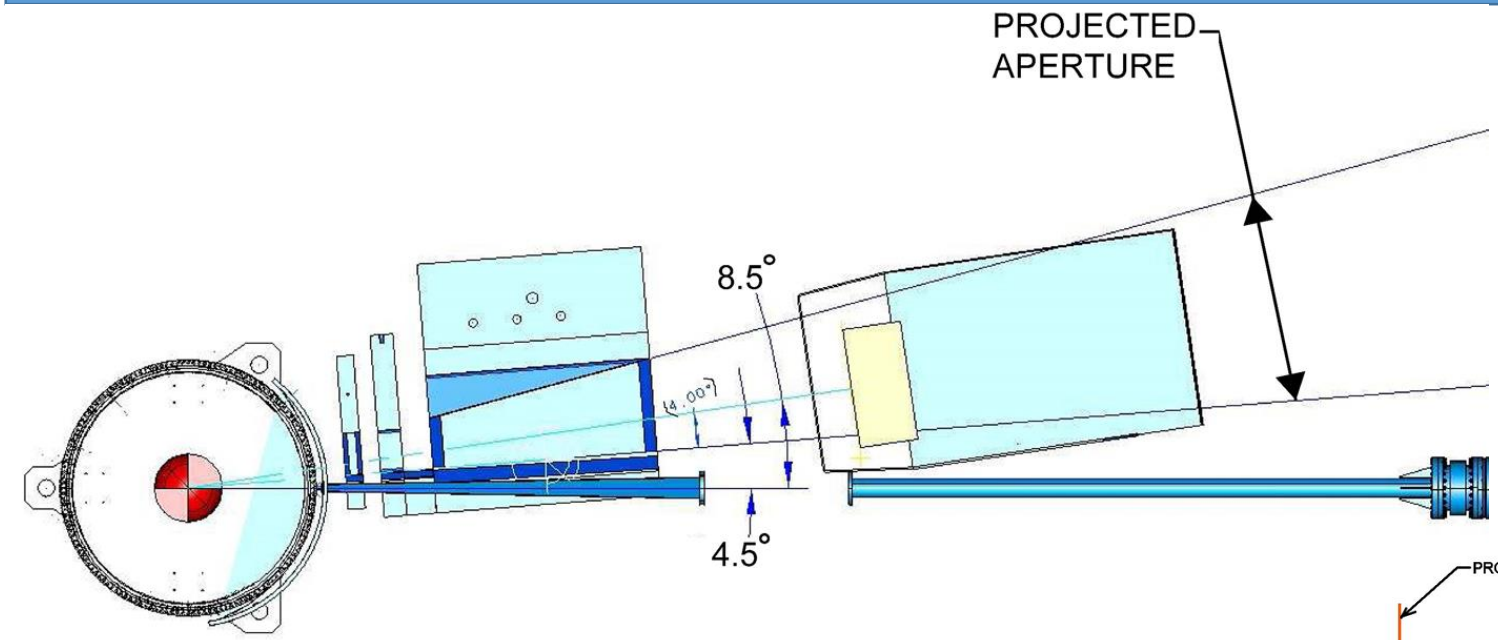

Sweeper Magnet NOT rotated by 1.5° about its center.

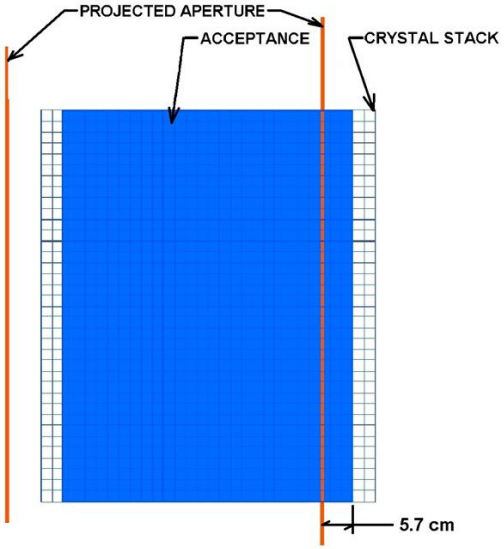

NPS CONFIGURATION:

CALO DISTANCE = 3 METERS
MAG DISTANCE = 1.6 METERS
MAG ANGLE = 3°

MINIMUM NPS ANGLE IN THIS CONFIG IS 8.5°

Target Platform Re-Enforcement Procurement

GANTT CHART

	Task Mode	Task Name	Duration	Start	Finish	F	% Comp	Add New
1		**1 Target Platform Re-enforcement**	**22 days**	**Mon 4/8/19**	**Tue 5/7/19**		**26%**	
2		**1.1 Design and Procurement**	**22 days**	**Mon 4/8/19**	**Tue 5/7/19**		**26%**	
3		1.1.1 Engineering	7.5 days	Mon 4/8/19	Wed 4/17/19		90%	
4		1.1.2 Design	5 days	Mon 4/8/19	Fri 4/12/19		20%	
5		1.1.3 Drawing details	5 days	Mon 4/15/19	Fri 4/19/19	4	0%	
6		1.1.4 Engineering sign off	1 day	Mon 4/22/19	Mon 4/22/19	5	0%	
7		1.1.5 Procurement	2 days	Tue 4/23/19	Wed 4/24/19	6	0%	
8		1.1.6 Fabrication	8 days	Thu 4/25/19	Mon 5/6/19	7	0%	
9		1.1.7 Delivery to JLAB Hall C	1 day	Tue 5/7/19	Tue 5/7/19	8	0%	

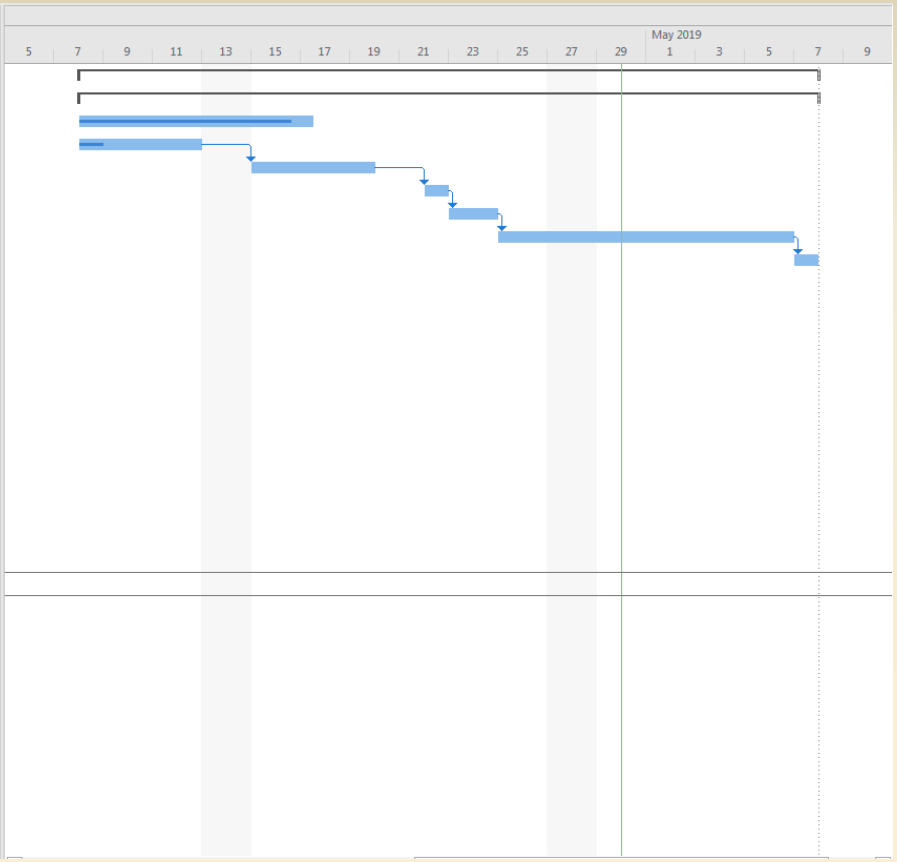

Target Platform Wedge Section Procurement

GANTT CHART

	Task Mode	Task Name	Duration	Start	Finish	Prede	% Comp	Add N
1		**Target Platform Wedge Section**	**42 days**	**Mon 4/8/19**	**Tue 6/4/19**		**6%**	
2		Engineering	5 days	Mon 4/8/19	Fri 4/12/19		50%	
3		Design	5 days	Mon 4/15/19	Fri 4/19/19	2	0%	
4		Drawing details	5 days	Mon 4/22/19	Fri 4/26/19	3	0%	
5		Engineering sign off	1 day	Mon 4/29/19	Mon 4/29/19	4	0%	
6		Requisition/Procurement / Award	5 days	Tue 4/30/19	Mon 5/6/19	5	0%	
7		Fabrication	20 days	Tue 5/7/19	Mon 6/3/19	6	0%	
8		Delivery to JLAB	1 day	Tue 6/4/19	Tue 6/4/19	7	0%	

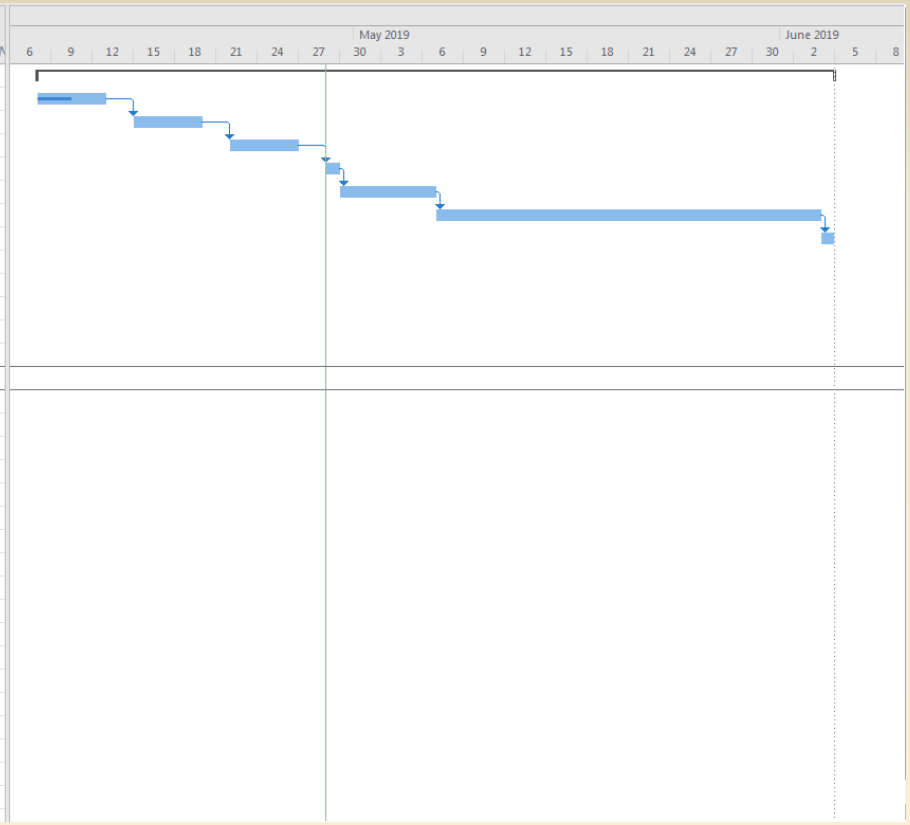

Detector Platform Procurement

GANTT CHART

	Task Mode	Task Name	Duration	Start	Finish	Prec	% Comp
1		**Detector Platform**	**72 days**	**Mon 4/8/19**	**Tue 7/16/19**		**6%**
2		Engineering	5 days	Mon 4/8/19	Fri 4/12/19		80%
3		Design	15 days	Mon 4/15/19	Fri 5/3/19	2	0%
4		Drawing details	10 days	Mon 5/6/19	Fri 5/17/19	3	0%
5		Engineering sign off	1 day	Mon 5/20/19	Mon 5/20/19	4	0%
6		Requisition/Procurement / Award	5 days	Tue 5/21/19	Mon 5/27/19	5	0%
7		Fabrication	35 days	Tue 5/28/19	Mon 7/15/19	6	0%
8		Delivery to JLAB	1 day	Tue 7/16/19	Tue 7/16/19	7	0%

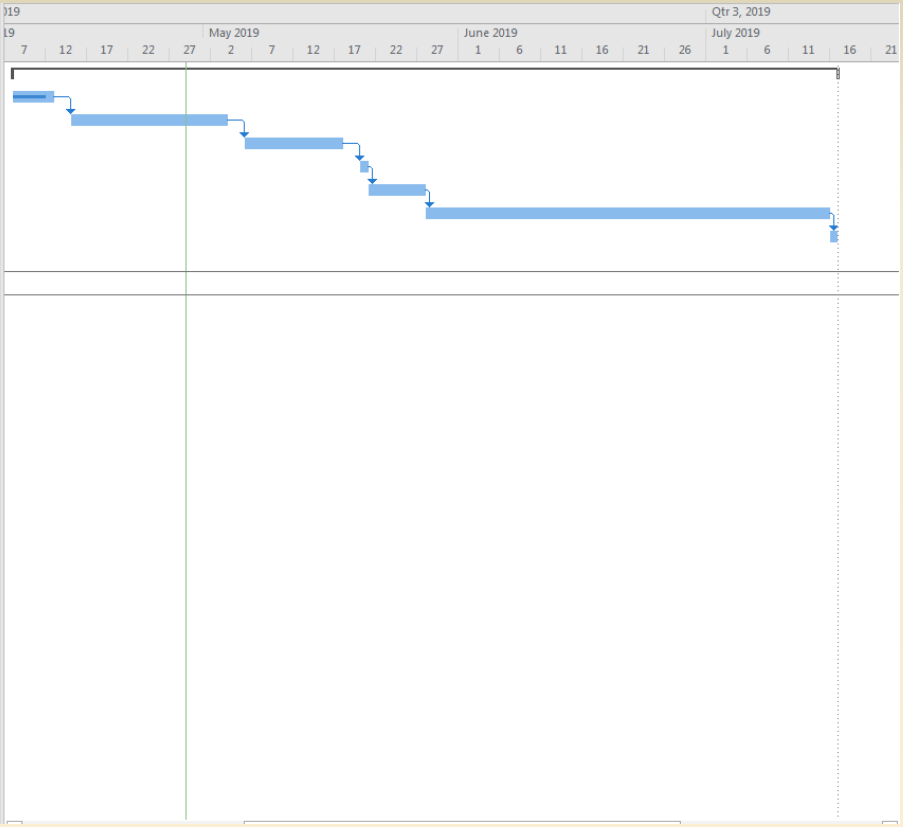

Sweeper Magnet Slide Plate Procurement

GANTT CHART

	Task Mode	Task Name	Duration	Start	Finish	Prec	Resou Name	% Co	Add N
1		**Sweeper Magnet Slide Plate**	**47 days**	**Mon 4/8/19**	**Tue 6/11/19**			**9%**	
2		Design	10 days	Mon 4/8/19	Fri 4/19/19			40%	
3		Drawing details	5 days	Mon 4/22/19	Fri 4/26/19	2		0%	
4		Engineering sign off	1 day	Mon 4/29/19	Mon 4/29/19	3		0%	
5		Procurement	5 days	Tue 4/30/19	Mon 5/6/19	4		0%	
6		Fabrication	25 days	Tue 5/7/19	Mon 6/10/19	5		0%	
7		Delivery to JLAB	1 day	Tue 6/11/19	Tue 6/11/19	6		0%	

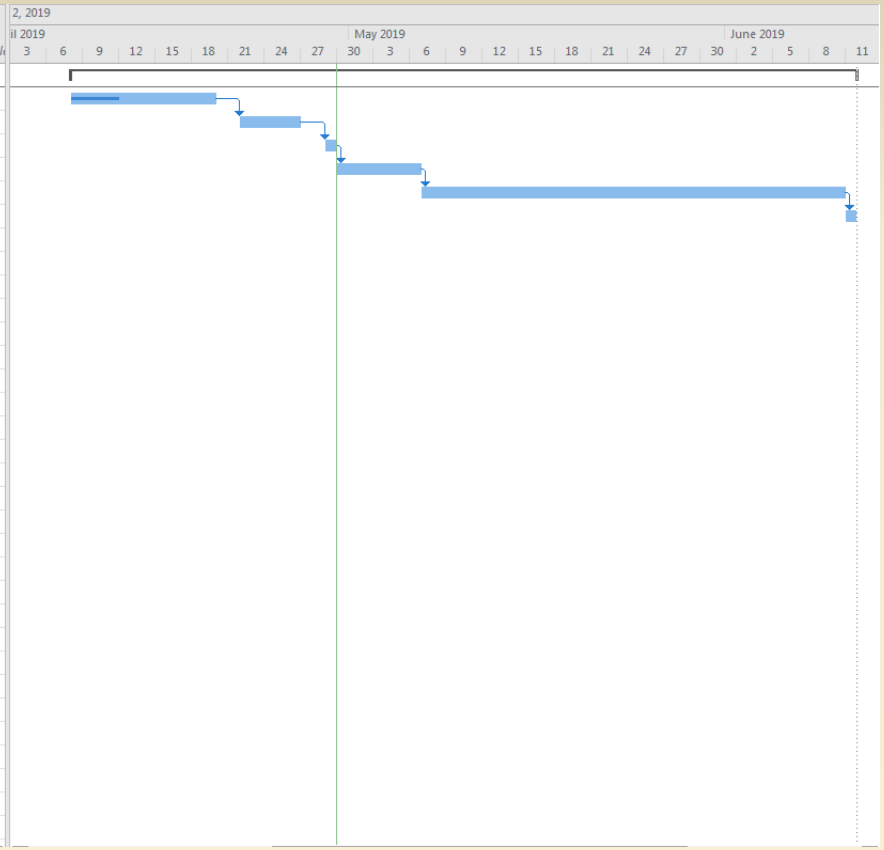

Magnet Support &Positioning Procurement

GANTT CHART

	Task Mode	Task Name	Duration	Start	Finish	Prec	Resou Nam	% Co	Add N
1		**Sweeper Magnet Support Positioning System**	**73 days**	**Mon 4/8/19**	**Wed 7/17/19**			**8%**	
2		Design	20 days	Mon 4/8/19	Fri 5/3/19			30%	
3		Drawing details	15 days	Mon 5/6/19	Fri 5/24/19	2		0%	
4		Engineering sign off	1 day	Mon 5/27/19	Mon 5/27/19	3		0%	
5		Procurement	5 days	Tue 5/28/19	Mon 6/3/19	4		0%	
6		Fabrication	30 days	Tue 6/4/19	Mon 7/15/19	5		0%	
7		Delivery to JLAB	1 day	Tue 7/16/19	Tue 7/16/19	6		0%	
8		Install on base of Sweeper Magnet	1 day	Wed 7/17/19	Wed 7/17/19	7		0%	

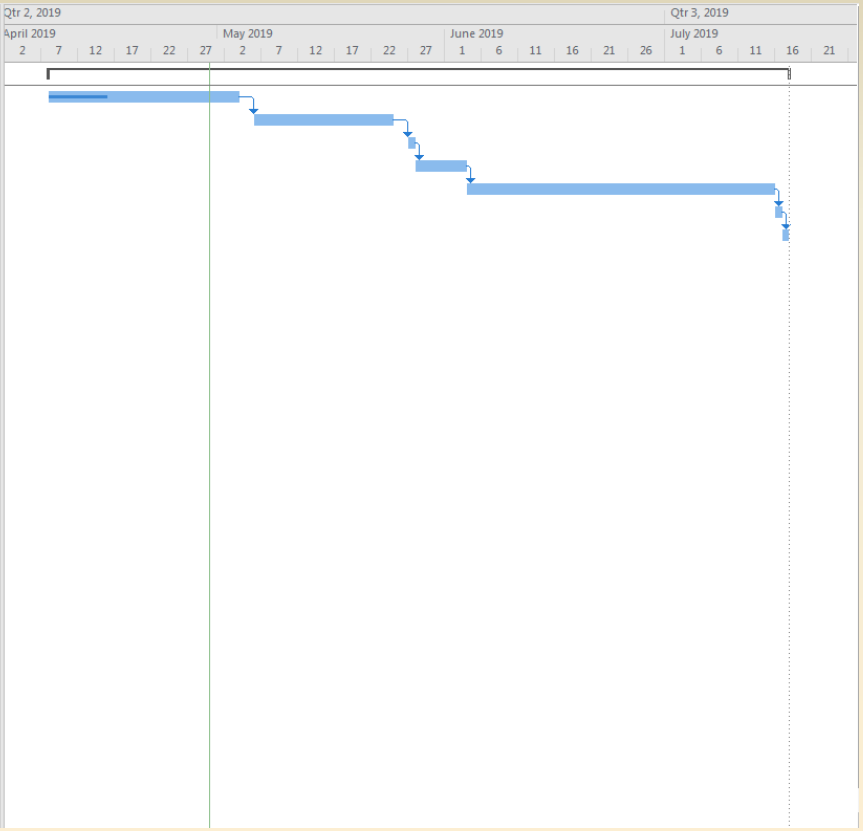

Detector Rail Procurement

GANTT CHART

	Task Mode	Task Name	Duration	Start	Finish	F	% Comp	Add New
1		**Detector Rail Assy**	**53 days**	**Mon 4/8/19**	**Wed 6/19/19**		**14%**	
2		Engineering	3 days	Mon 4/8/19	Wed 4/10/19		50%	
3		Design	12 days	Fri 4/12/19	Mon 4/29/19	2	50%	
4		Drawing details	5 days	Tue 4/30/19	Mon 5/6/19	3	0%	
5		Engineering sign off	1 day	Tue 5/7/19	Tue 5/7/19	4	0%	
6		Requisition/Procurement / Award	5 days	Wed 5/8/19	Tue 5/14/19	5	0%	
7		Fabrication	25 days	Wed 5/15/19	Tue 6/18/19	6	0%	
8		Delivery to JLAB	1 day	Wed 6/19/19	Wed 6/19/19	7	0%	

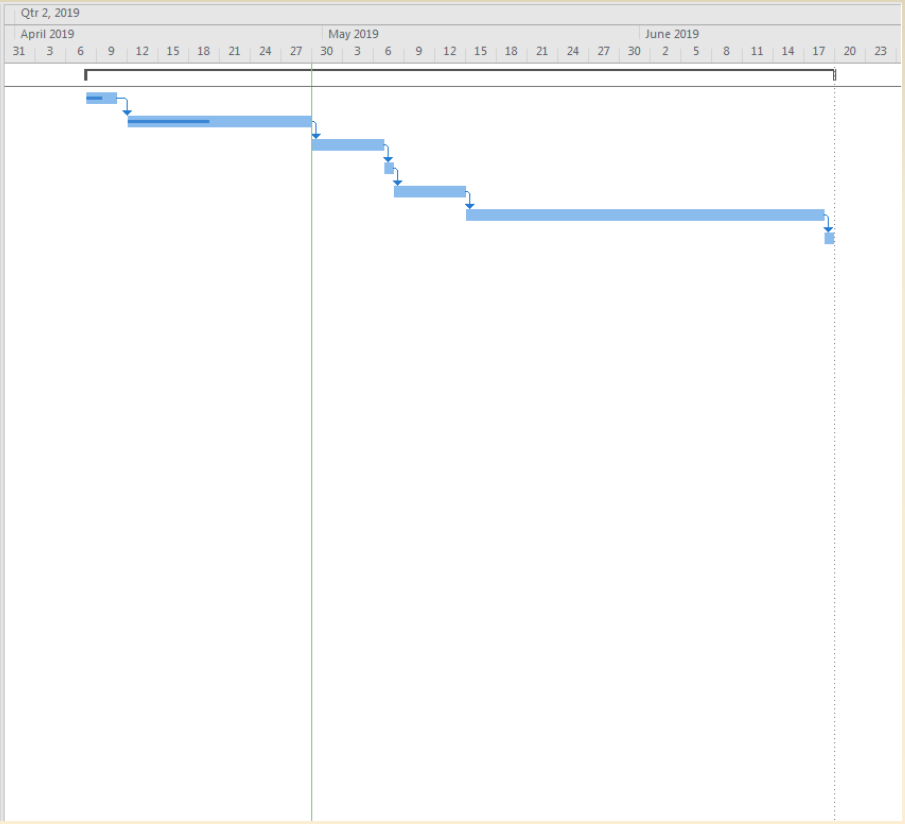

Down Stream Beam Line #1 Procurement

GANTT CHART

	Task Mode	Task Name	Duration	Start	Finish	Predeces	% Compl
1		**Down Stream Beam Line #1**	**59.7 days**	**Mon 4/8/19**	**Fri 6/28/19**		**0%**
2		Engineering	15 days	Mon 4/8/19	Fri 4/26/19		0%
3		Design	15 days	Mon 4/8/19	Fri 4/26/19		0%
4		Drawing details	5 days	Mon 4/29/19	Fri 5/3/19	3	0%
5		Engineering sign off	1 day	Mon 5/6/19	Mon 5/6/19	4	0%
6		Requisition/Procurement/ Award	5 days	Tue 5/7/19	Mon 5/13/19	5	0%
7		Fabrication	15 days	Tue 5/14/19	Mon 6/3/19	6	0%
8		Test / Leak Check	3 days	Tue 6/4/19	Thu 6/6/19	7	0%
9		Delivery to JLAB	1 day	Mon 4/8/19	Mon 4/8/19		0%

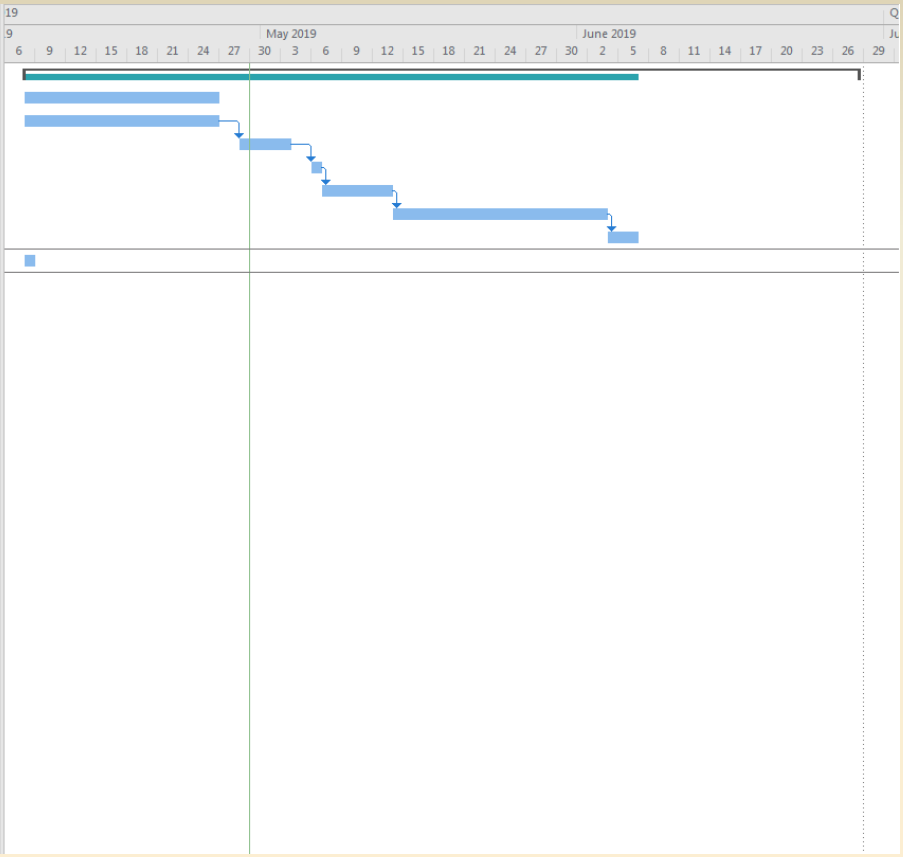

HB Re-install on SHMS

GANTT CHART

	Task Mode	Task Name	Duration	Start	Finish	Pr
1		**HB Re-Installation**	**18 days**	**Mon 5/11/20**	**Wed 6/3/20**	
2		Crane HB onto SHMS	1 day	Mon 5/11/20	Mon 5/11/20	
3		Connect foot pads	0.5 days	Tue 5/12/20	Tue 5/12/20	2
4		Survey and align magnet on SHMS	3 days	Tue 5/12/20	Fri 5/15/20	3
5		Re-connect CL Mass flow controllers/Heaters	1 day	Wed 5/13/20	Wed 5/13/20	8
6		Re-connect warm return line Valve [closed]	1 day	Wed 5/13/20	Wed 5/13/20	8
7		Pump on OVC insulation	2 days	Tue 5/12/20	Thu 5/14/20	3
8		Hi-Pot Magnet	0.5 days	Tue 5/12/20	Tue 5/12/20	3
9		Re-connect I/O cables	2 days	Wed 5/13/20	Thu 5/14/20	8
10		Verify I/O signals and PLC functionality	2 days	Fri 5/15/20	Mon 5/18/20	9
11		Verify He and LN2 circuits are positive pressure	1 day	Tue 5/12/20	Wed 5/13/20	3
12		Connect He return line	0.5 days	Fri 5/15/20	Fri 5/15/20	9
13		Connect He gas supply to magnet	0.5 days	Fri 5/15/20	Fri 5/15/20	12
14		Monitor H20 contamination in He circuit	2 days	Mon 5/18/20	Tue 5/19/20	13
15		Stab Cryogenic U-Tubes	1 day	Wed 5/20/20	Wed 5/20/20	14
16		Cool Down magnet to 80K via Heat exchanger	5 days	Thu 5/21/20	Wed 5/27/20	15
17		Cool down to 4.5K, Turn off HX	1 day	Thu 5/28/20	Thu 5/28/20	16
18		Fill Magnet with LHe	1 day	Fri 5/29/20	Fri 5/29/20	17
19		Connect DC Bus lines	0.5 days	Thu 5/21/20	Thu 5/21/20	15
20		Connect LCW lines	0.5 days	Thu 5/21/20	Thu 5/21/20	19
21		Install Current lead shields	1 day	Fri 5/22/20	Fri 5/22/20	20
22		Install Down Stream Beam Pipe	1 day	Fri 5/15/20	Mon 5/18/20	4
23		Install Back Collimator	1 day	Mon 5/18/20	Tue 5/19/20	22
24		Back Collimator Survey & Aligned	2 days	Tue 5/19/20	Thu 5/21/20	23
25		Install Front Shielding	1 day	Tue 5/19/20	Wed 5/20/20	23
26		Re-calibrate Quench Detector	1 day	Mon 5/25/20	Mon 5/25/20	21
27		Magnet Re-training to full current	4 days	Tue 5/26/20	Fri 5/29/20	26
28		Optics with beam verification	3 days	Mon 6/1/20	Wed 6/3/20	27

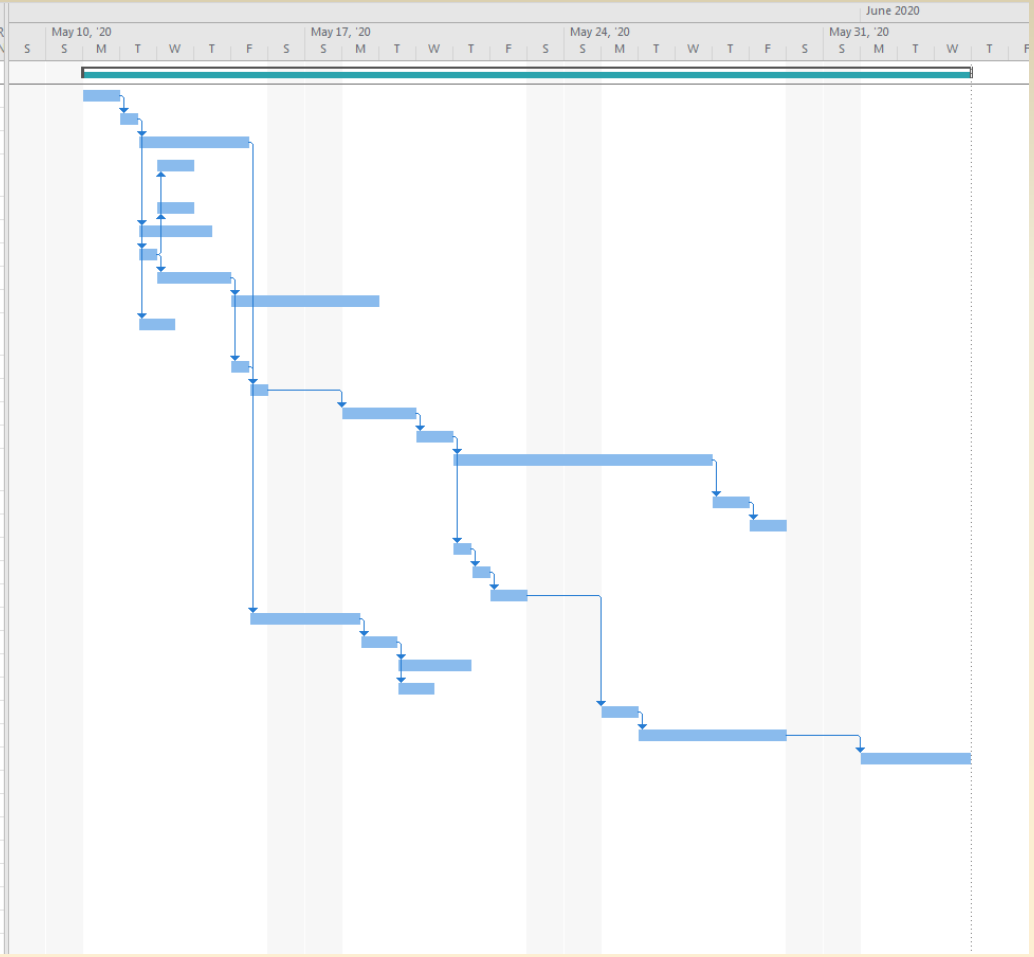

SHMS before NPS

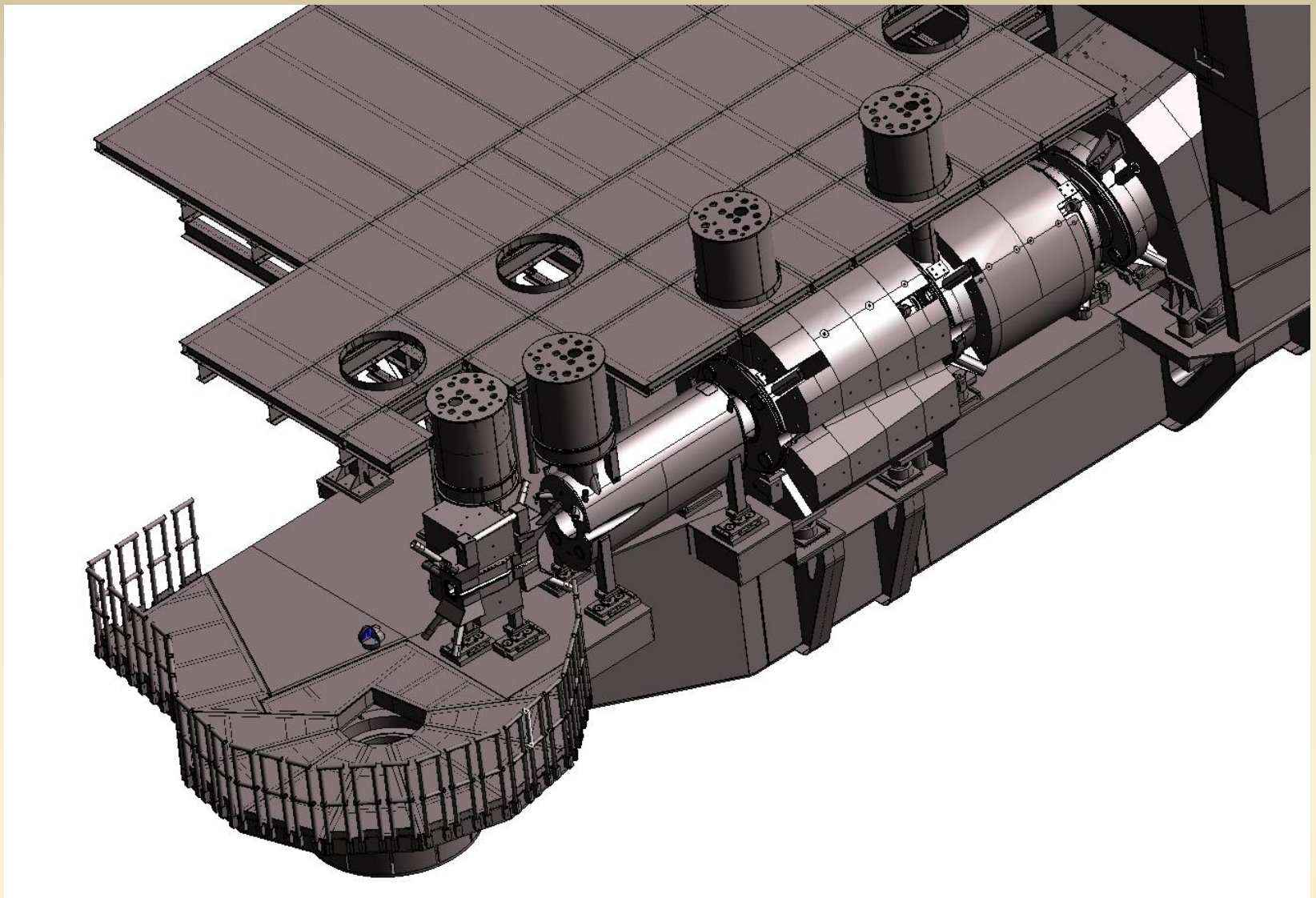

HB Removed and Pre-Installation Mods to SHMS

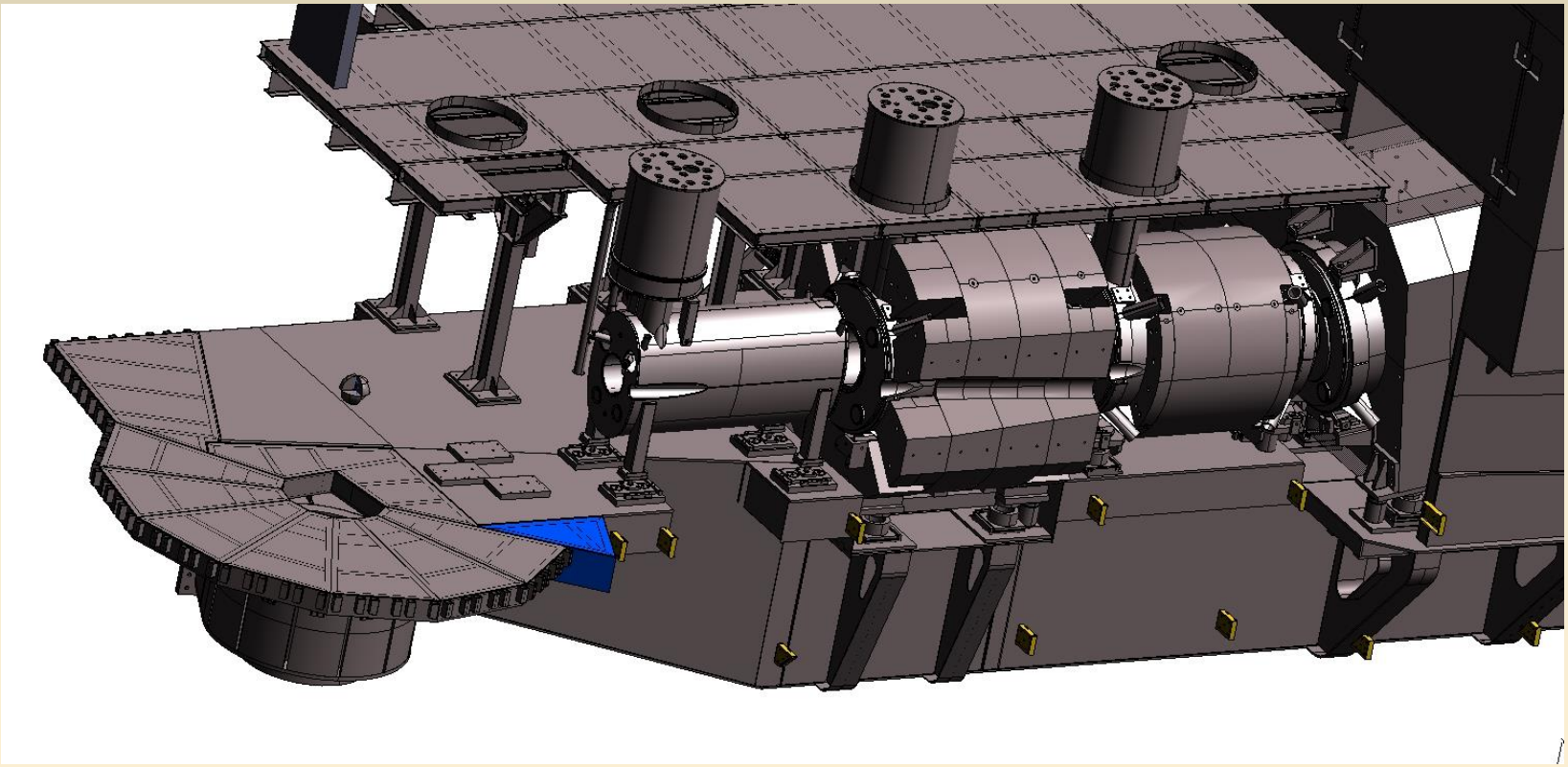

Sweeper Magnet deck plate covers HB support pads