Mechanical design / Cut view

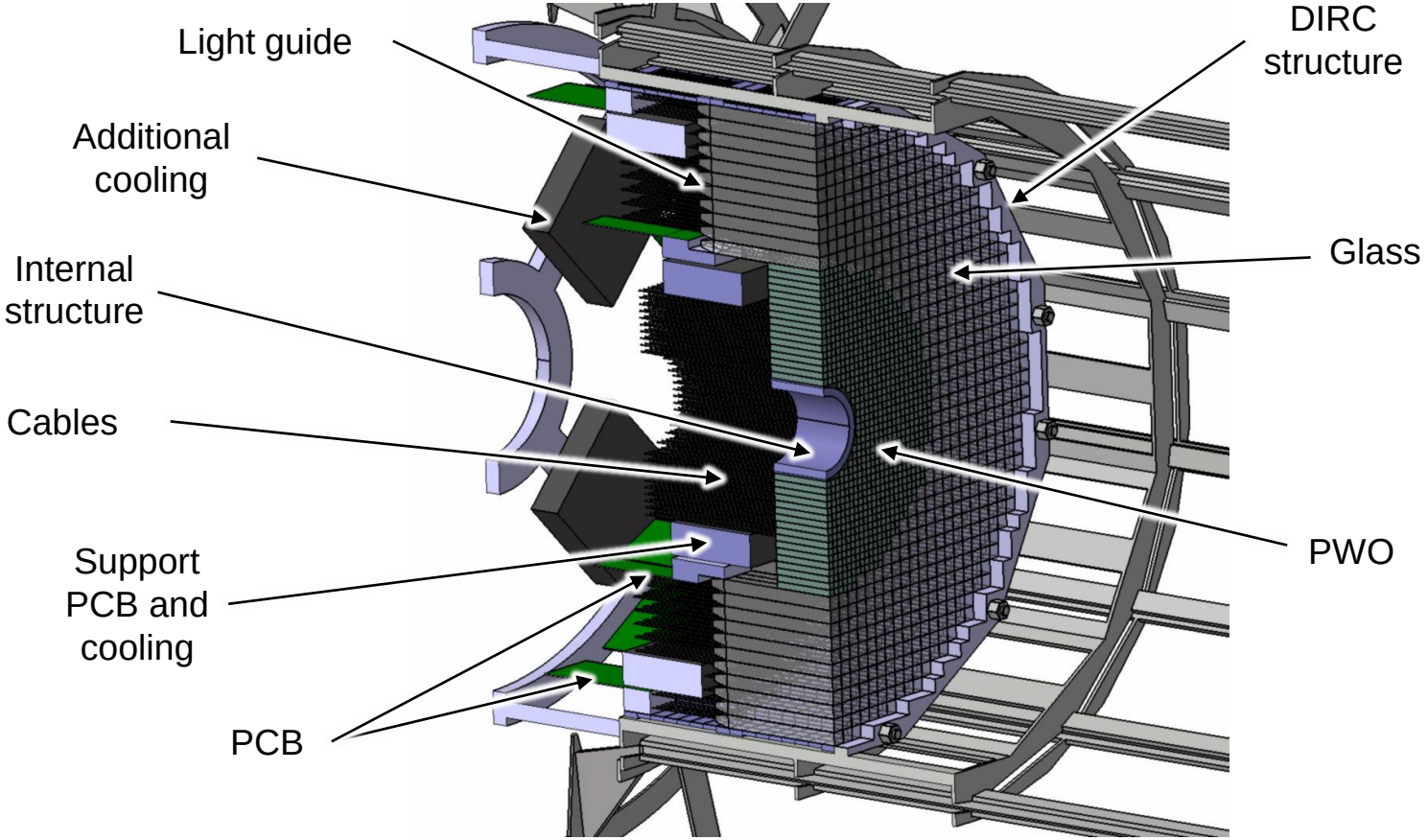

Fastening on the DIRC

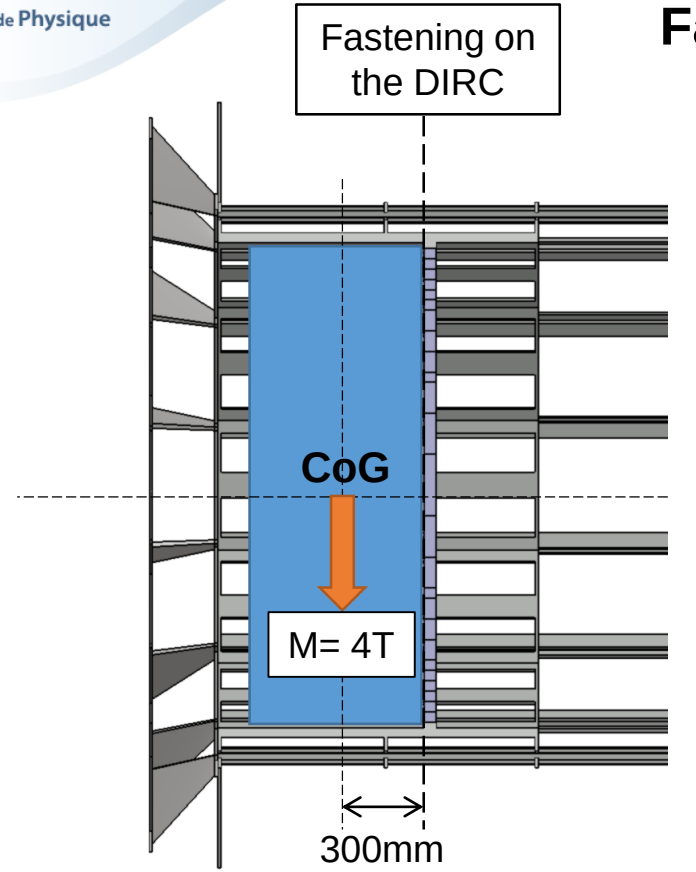

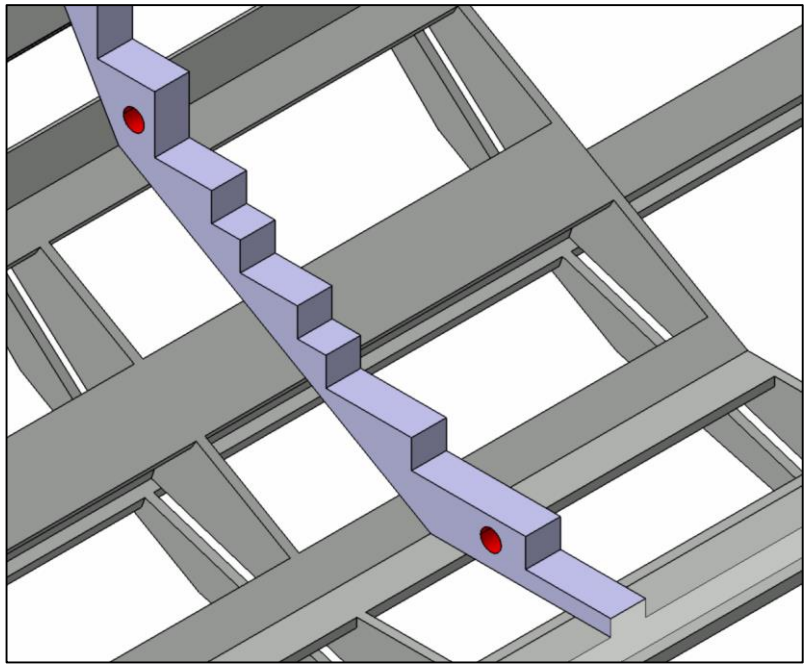

Holes on the structure of the DIRC

Mass and location to sizing the structure of the DIRC

SiPM configuration for the PWO

4 PWO

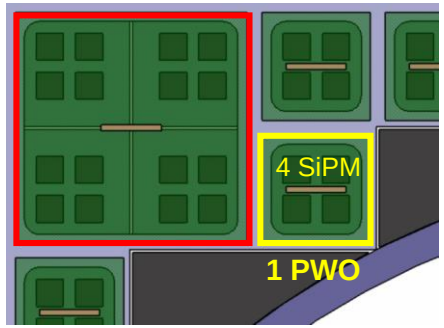

Config 1 – 4 SiPM/Crystal

4 PWO

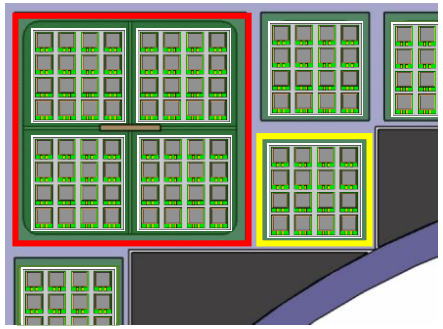

Config 2 – 16 SiPM/Crystal

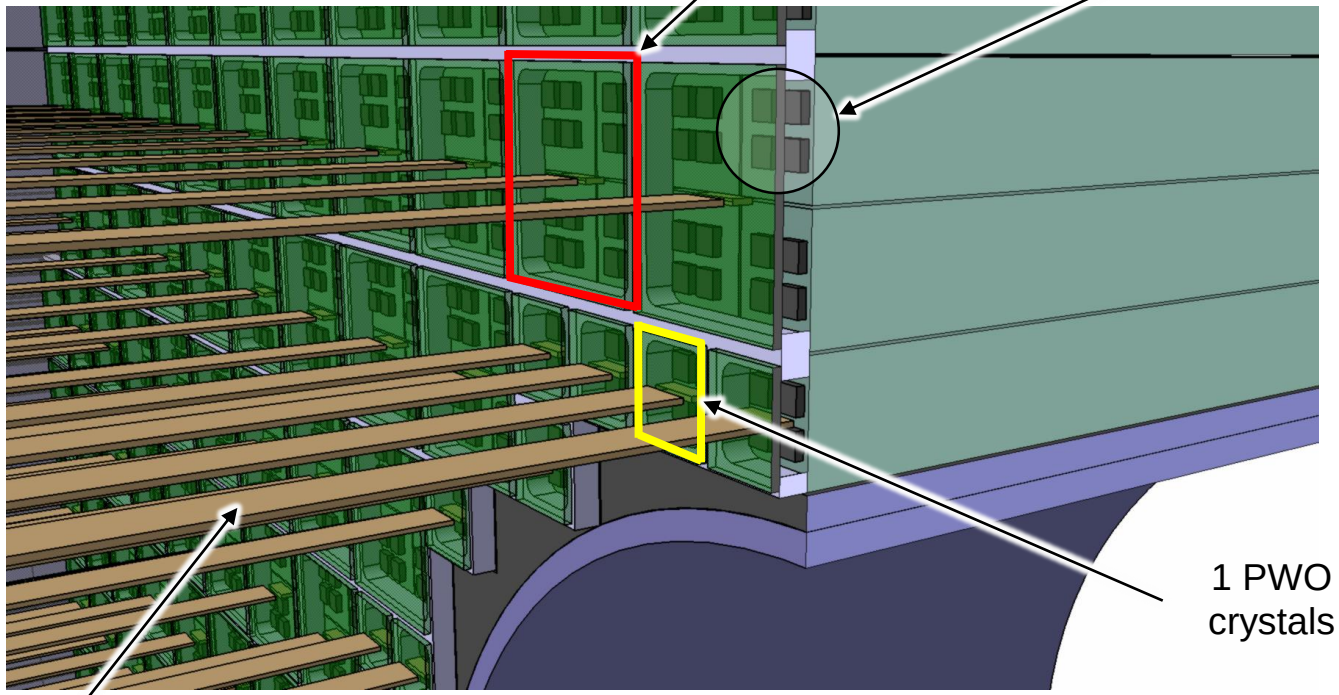

Assembly of the support structure of the PCBs

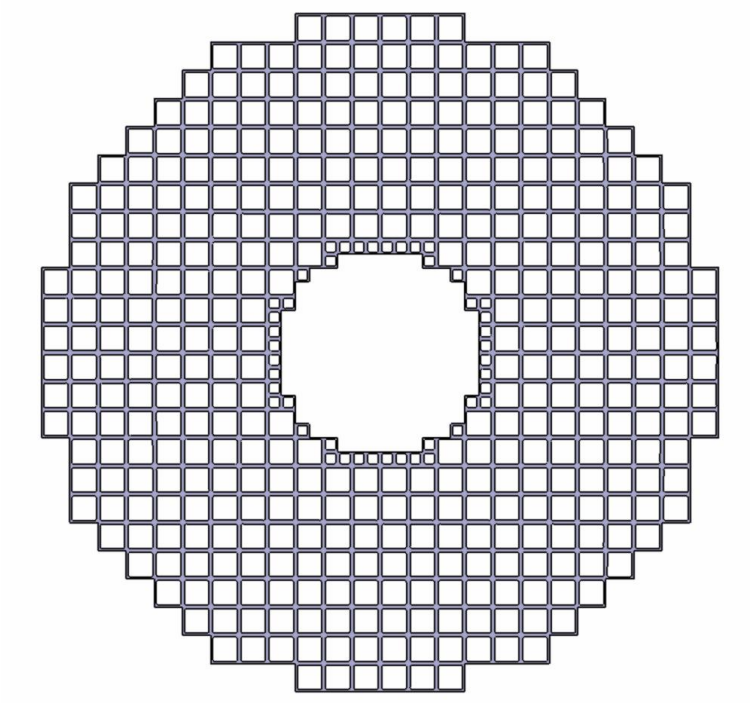

Aluminum support structure

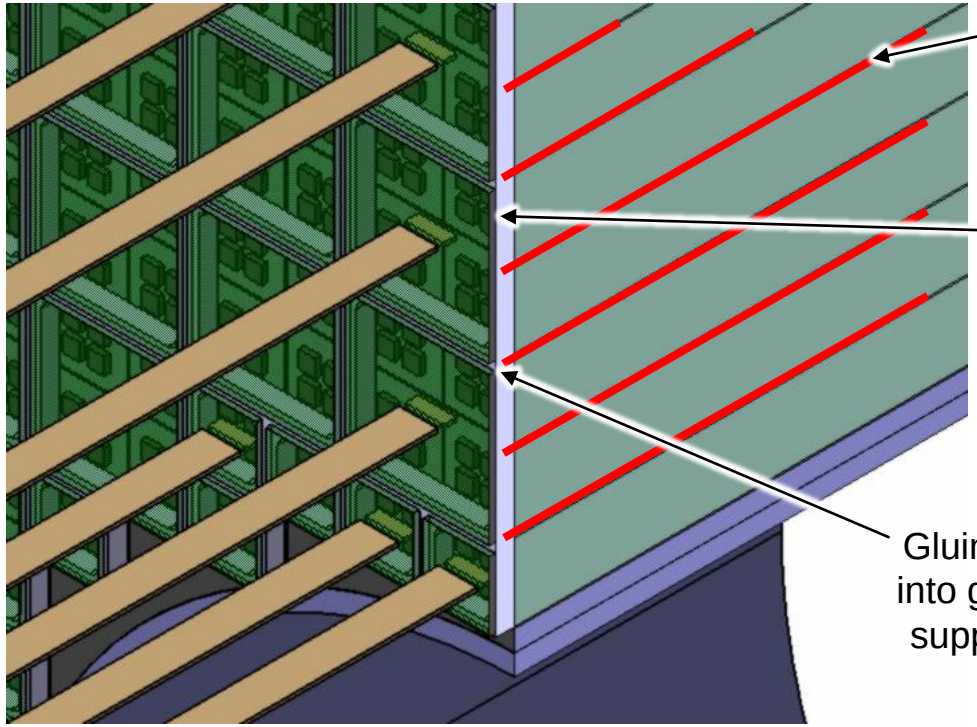

Configuration of the first circle of crystals

Nb of crystals on the first layer
= f(inox ring thickness)

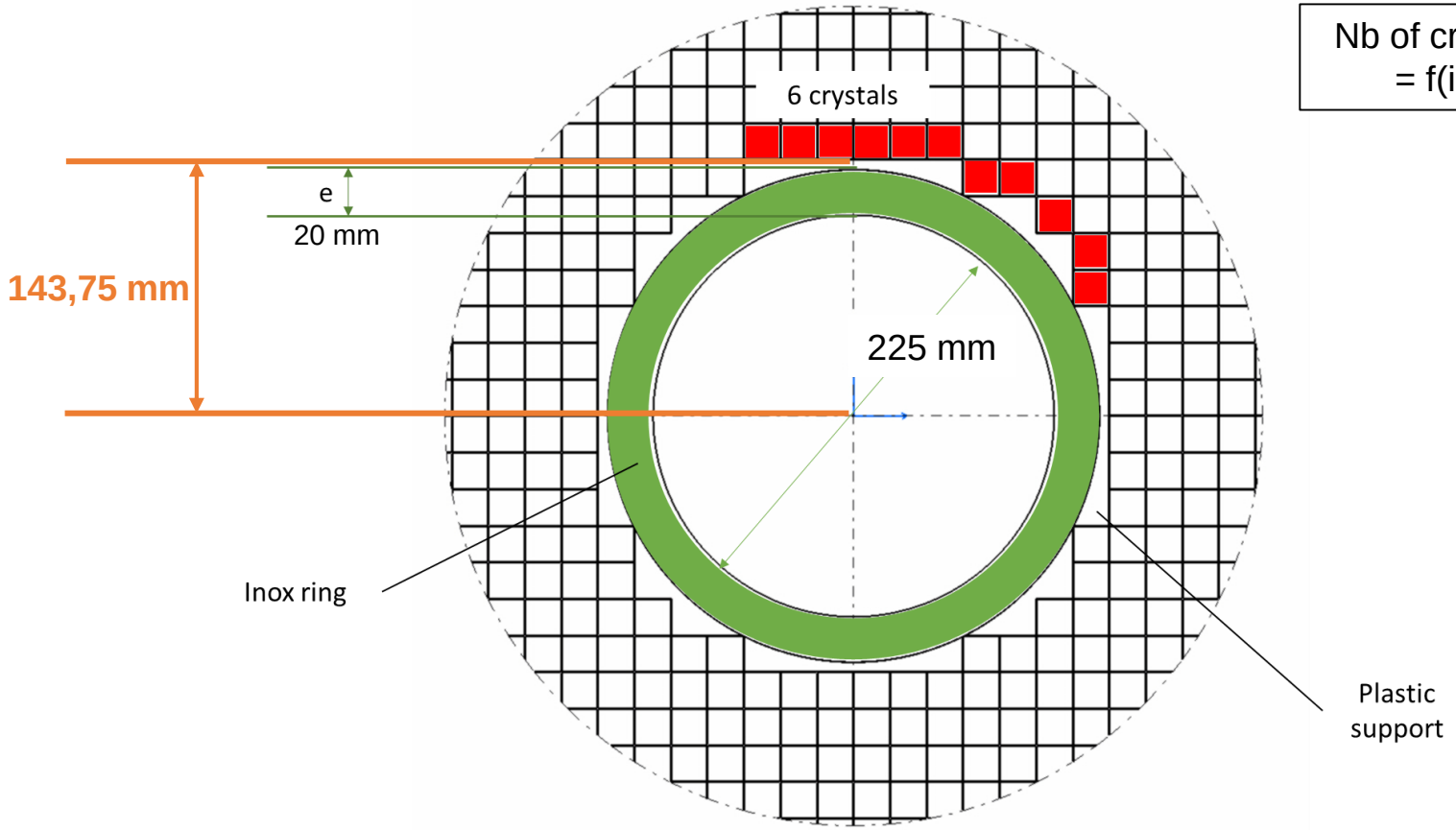

Configuration of the first circle of crystals

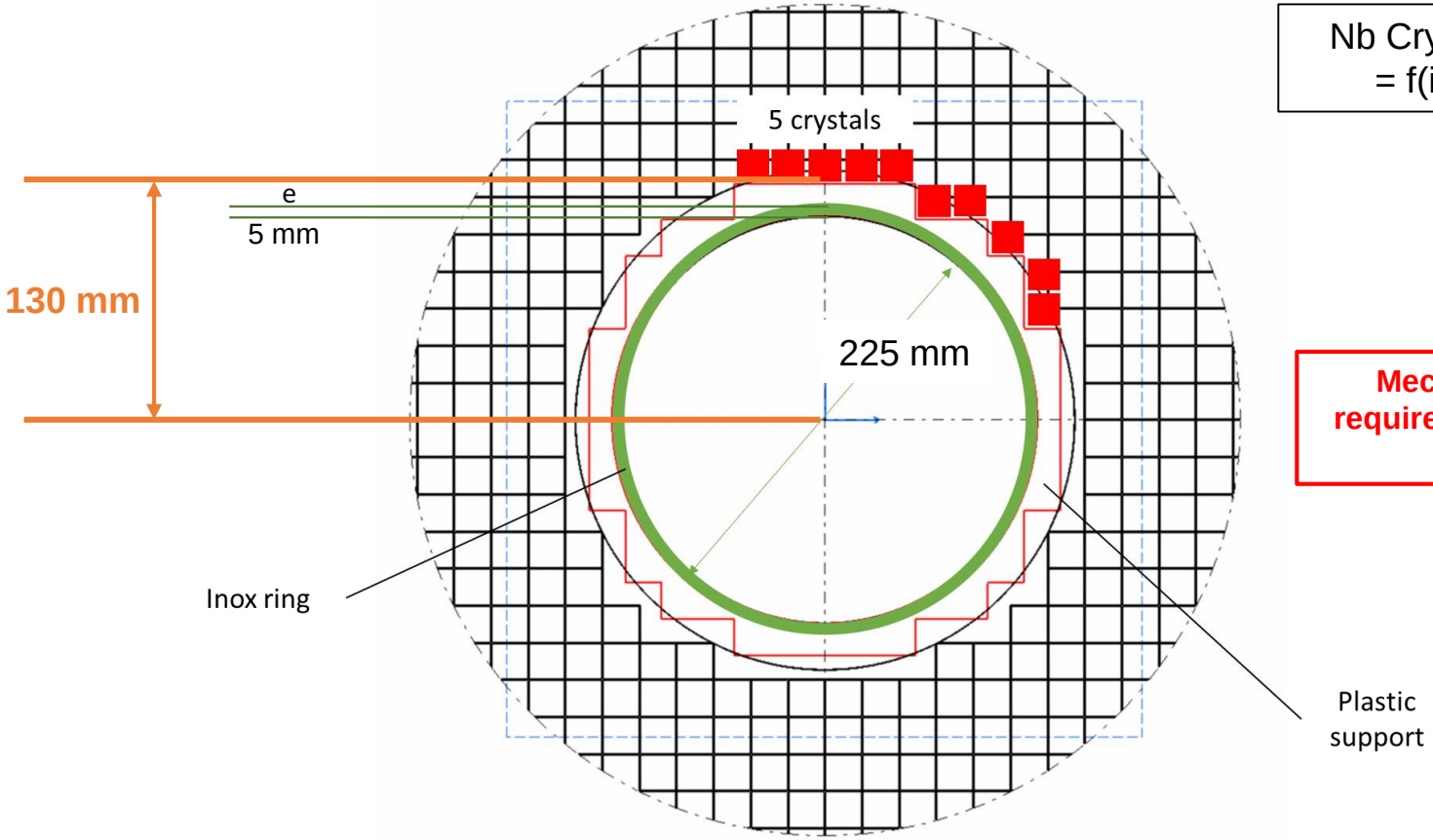

Nb Crystals on the first layer = f(inox ring thickness)

Mechanical calculation required to validate the 5mm thickness

Sizing of the internal structure

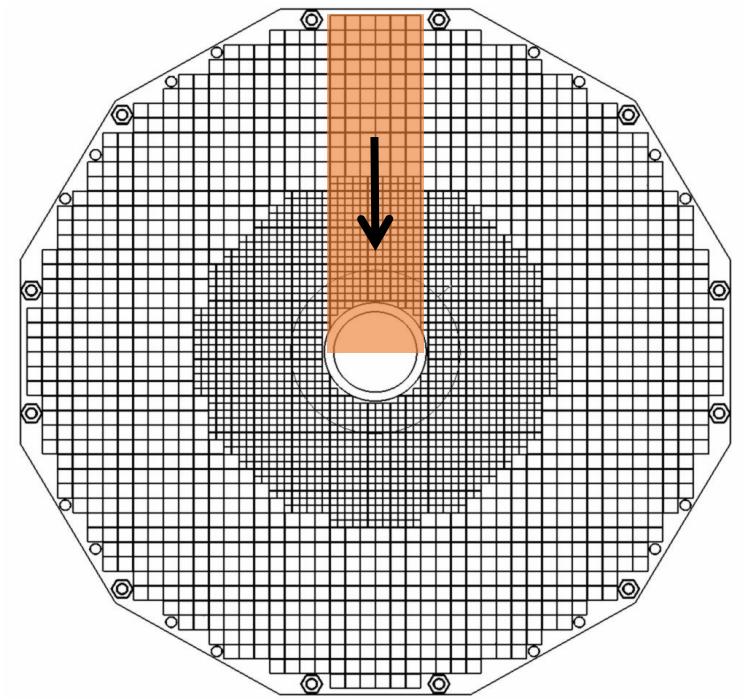

Weight to consider for the calculation
M= 500 Kg

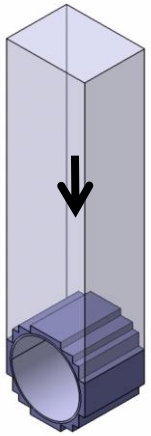

Equivalent model

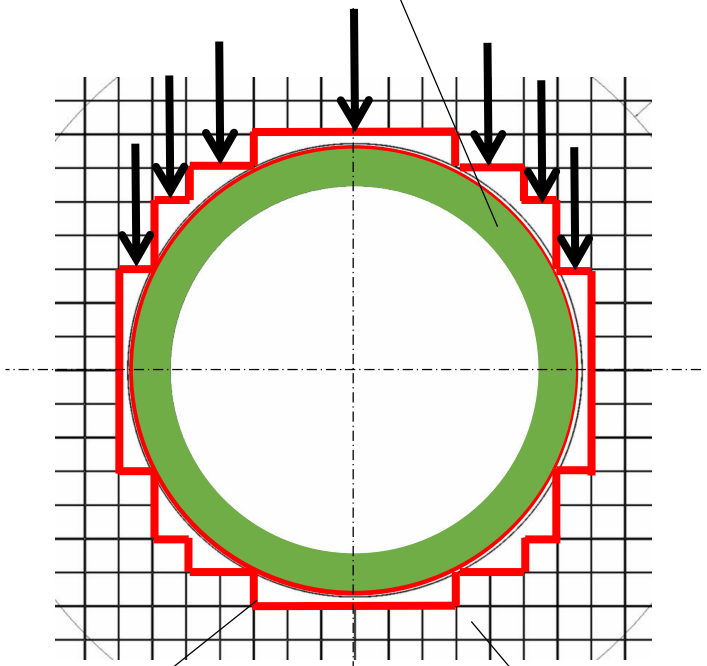

Mechanical calculation for e= 5mm

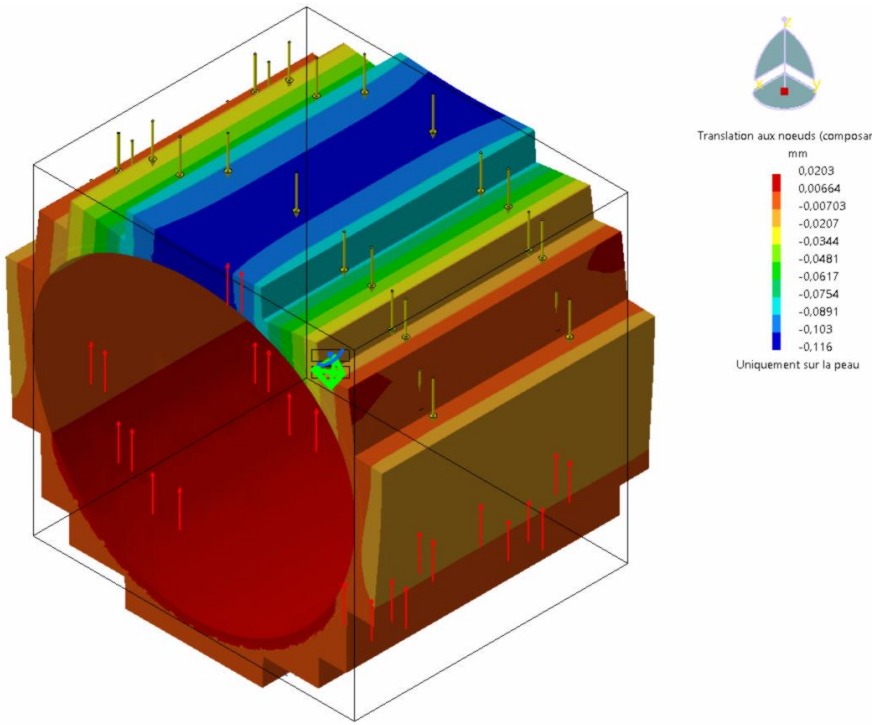

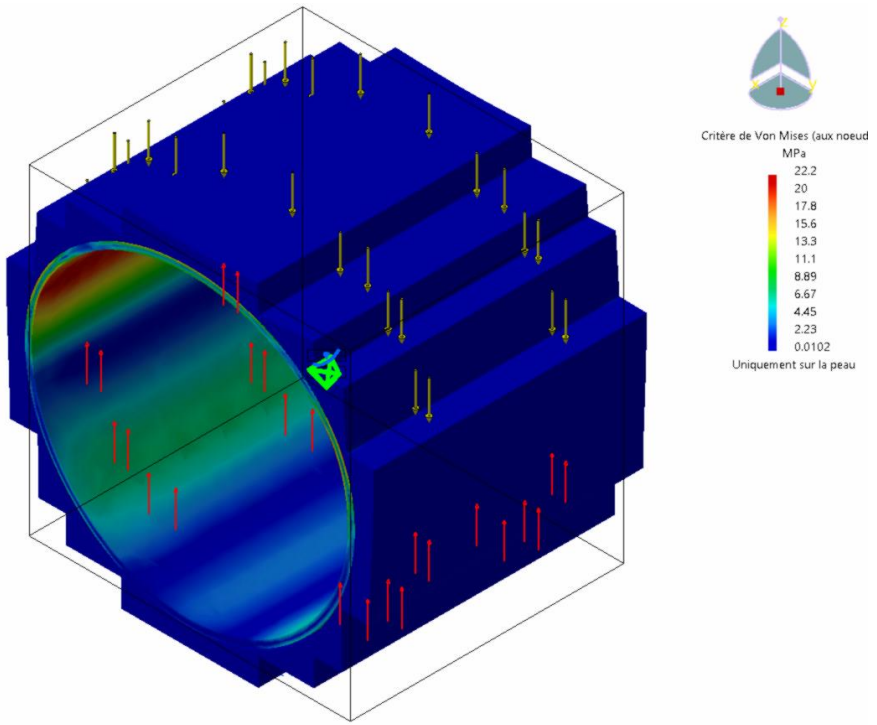

Sizing of the thickness of the internal structure

Beam pipe positioning

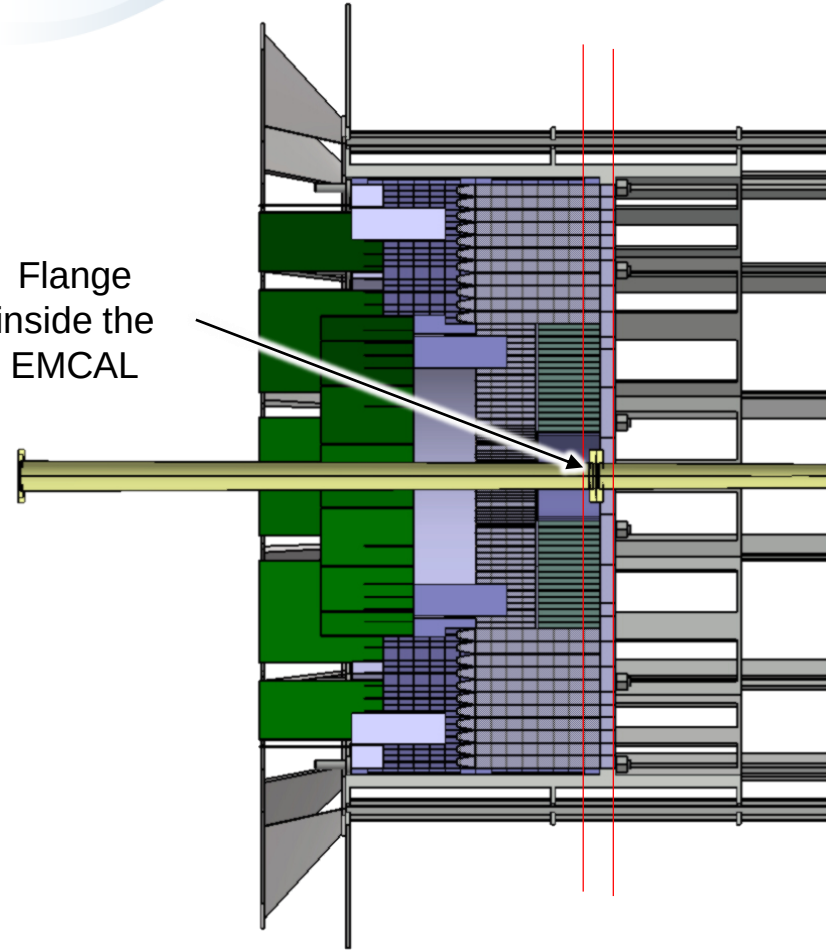

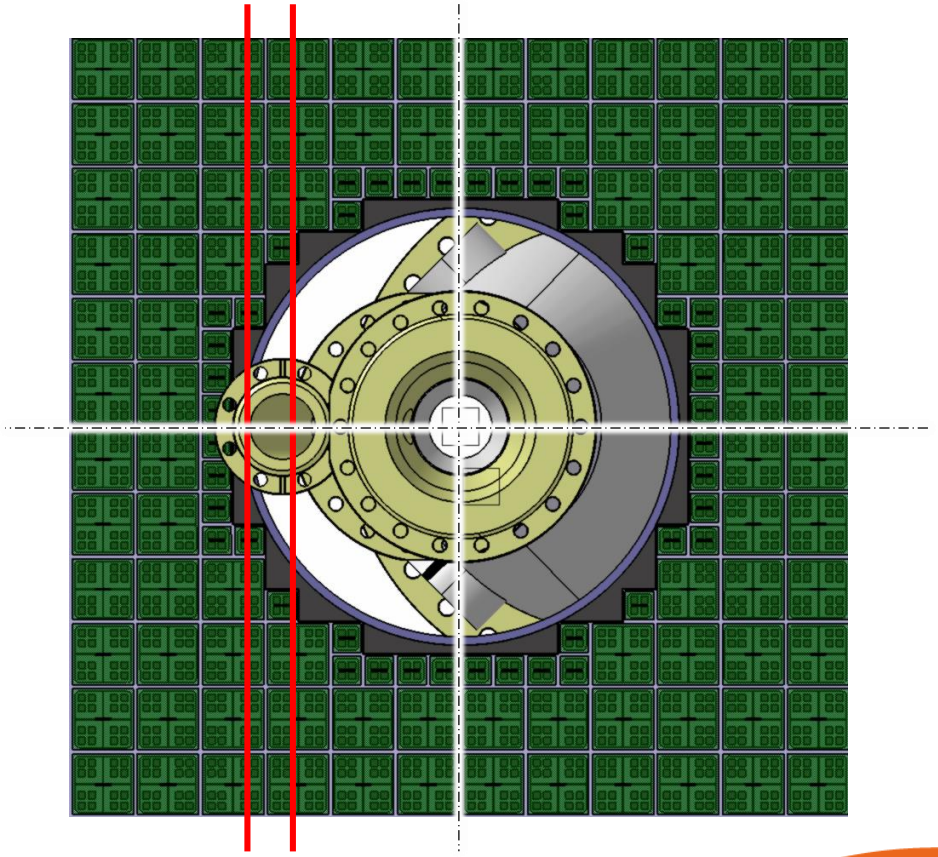
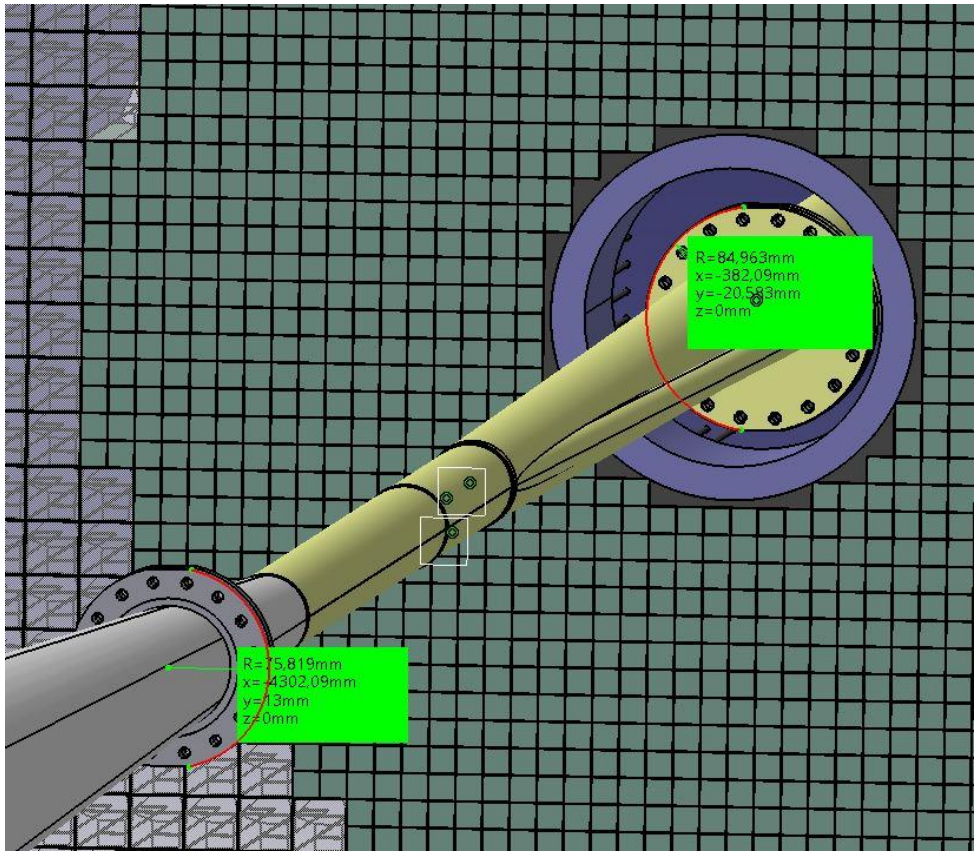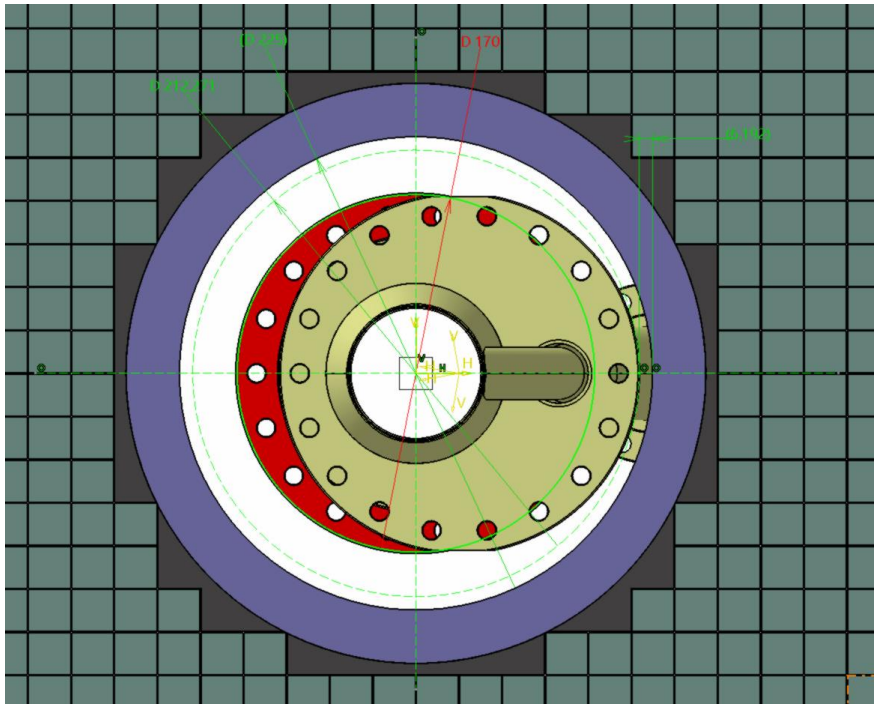
Beam pipe positioning