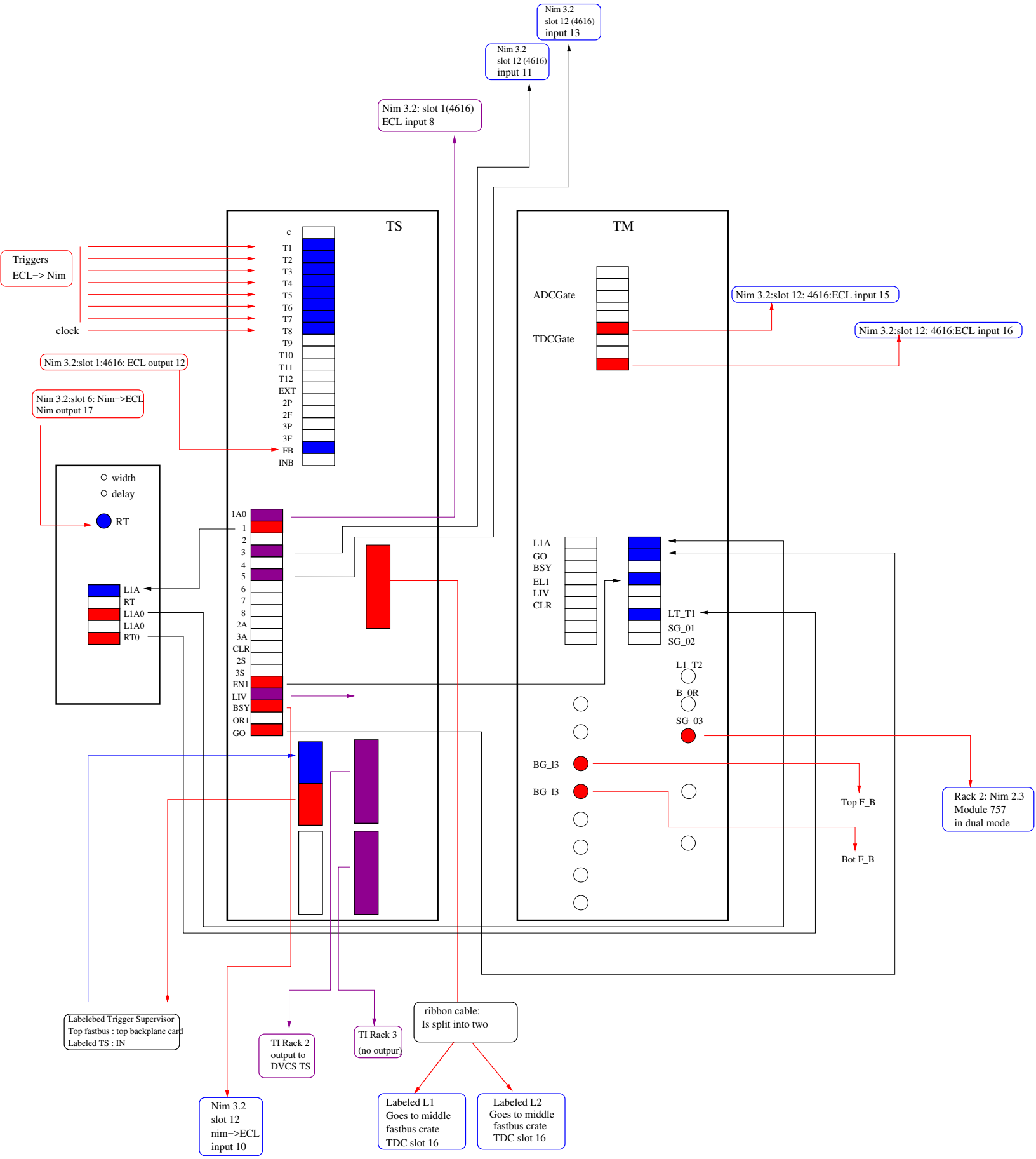
Nim 3.2
slot 12 (4616)
input 13
Nim 3.2
slot 12 (4616)
input 11
Nim 3.2: slot 1(4616)
ECL input 8
TS
TM
Triggers
ECL–> Nim
clock
c
T1
T2
T3
T4
T5
T6
T7
T8
T9
T10
T11
T12
EXT
2P
2F
3P
3F
FB
INB
ADCGate
TDCGate
Nim 3.2:slot 12: 4616:ECL input 15
Nim 3.2:slot 12: 4616:ECL input 16
Nim 3.2:slot 1:4616: ECL output 12
Nim 3.2:slot 6: Nim–>ECL
Nim output 17
width
delay
RT
L1A
RT
L1A0
L1A0
RT0
1A0
1
2
3
4
5
6
7
8
2A
3A
CLR
2S
3S
EN1
LIV
BSY
OR1
GO
L1A
GO
BSY
EL1
LIV
CLR
LT_T1
SG_01
SG_02
L1_T2
B_0R
SG_03
BG_l3
BG_l3
Top F_B
Bot F_B
Rack 2: Nim 2.3
Module 757
in dual mode
Labelebed Trigger Supervisor
Top fastbus : top backplane card
Labeled TS : IN
TI Rack 2
output to
DVCS TS
TI Rack 3
(no outpur)
ribbon cable:
Is split into two
Nim 3.2
slot 12
nim–>ECL
input 10
Labeled L1
Goes to middle
fastbus crate
TDC slot 16
Labeled L2
Goes to middle
fastbus crate
TDC slot 16

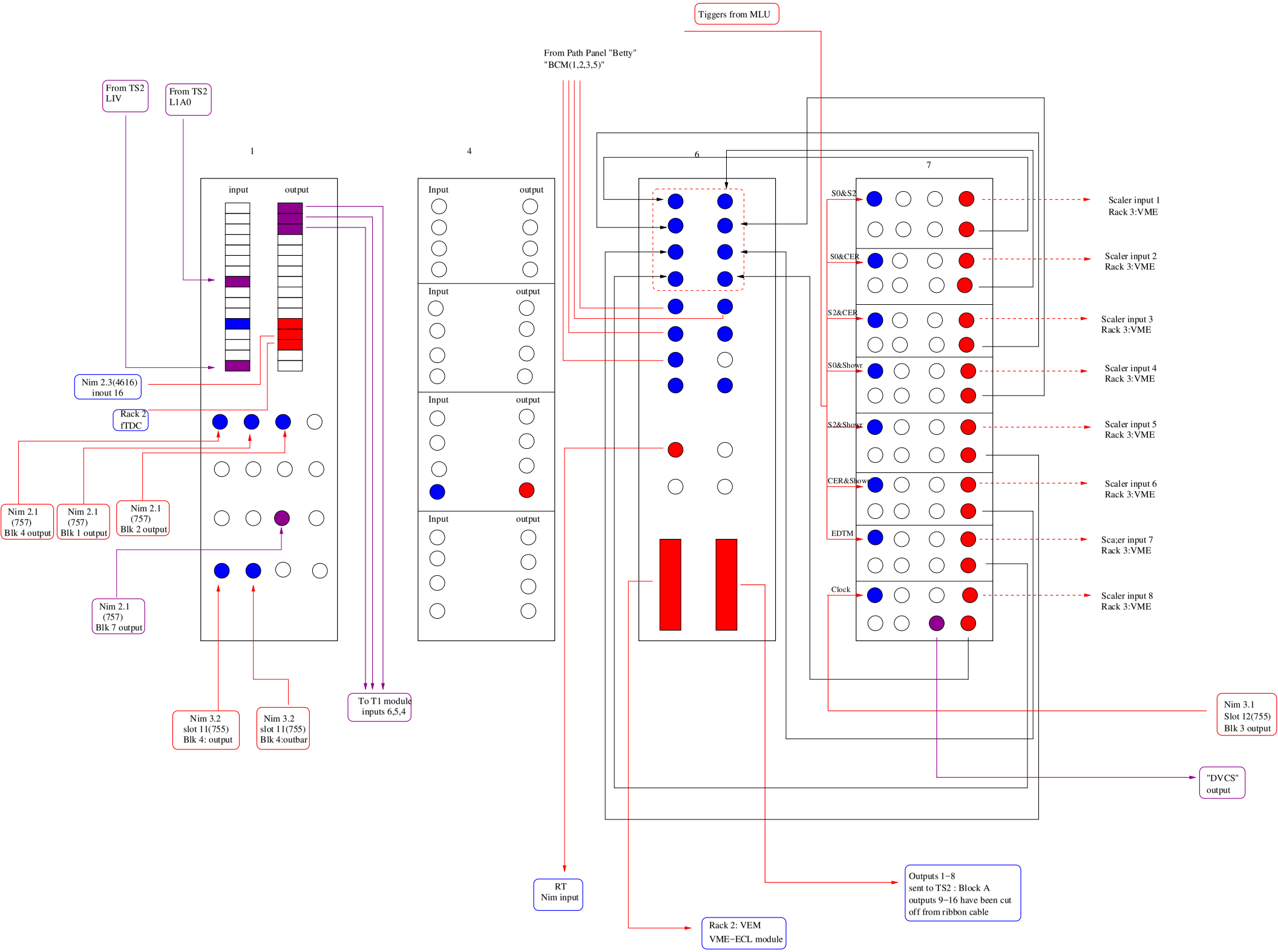
Tiggers from MLU
From Path Panel "Betty"
"BCM(1,2,3,5)"
From TS2
LIV
From TS2
L1A0
1
input
output
4
Input
output
6
7
S0&S2
S0&CER
S2&CER
S0&Showr
S2&Showr
CER&Showr
EDTM
Clock
Scaler input 1
Rack 3:VME
Scaler input 2
Rack 3:VME
Scaler input 3
Rack 3:VME
Scaler input 4
Rack 3:VME
Scaler input 5
Rack 3:VME
Scaler input 6
Rack 3:VME
Sca;er input 7
Rack 3:VME
Scaler input 8
Rack 3:VME
Nim 2.3(4616)
inout 16
Rack 2
fTDC
Nim 2.1
(757)
Blk 4 output
Nim 2.1
(757)
Blk 1 output
Nim 2.1
(757)
Blk 2 output
Nim 2.1
(757)
Blk 7 output
Nim 3.2
slot 11(755)
Blk 4: output
Nim 3.2
slot 11(755)
Blk 4:outbar
To T1 module
inputs 6,5,4
Nim 3.1
Slot 12(755)
Blk 3 output
"DVCS"
output
RT
Nim input
Outputs 1−8
sent to TS2 : Block A
outputs 9−16 have been cut
off from ribbon cable
Rack 2: VEM
VME−ECL module

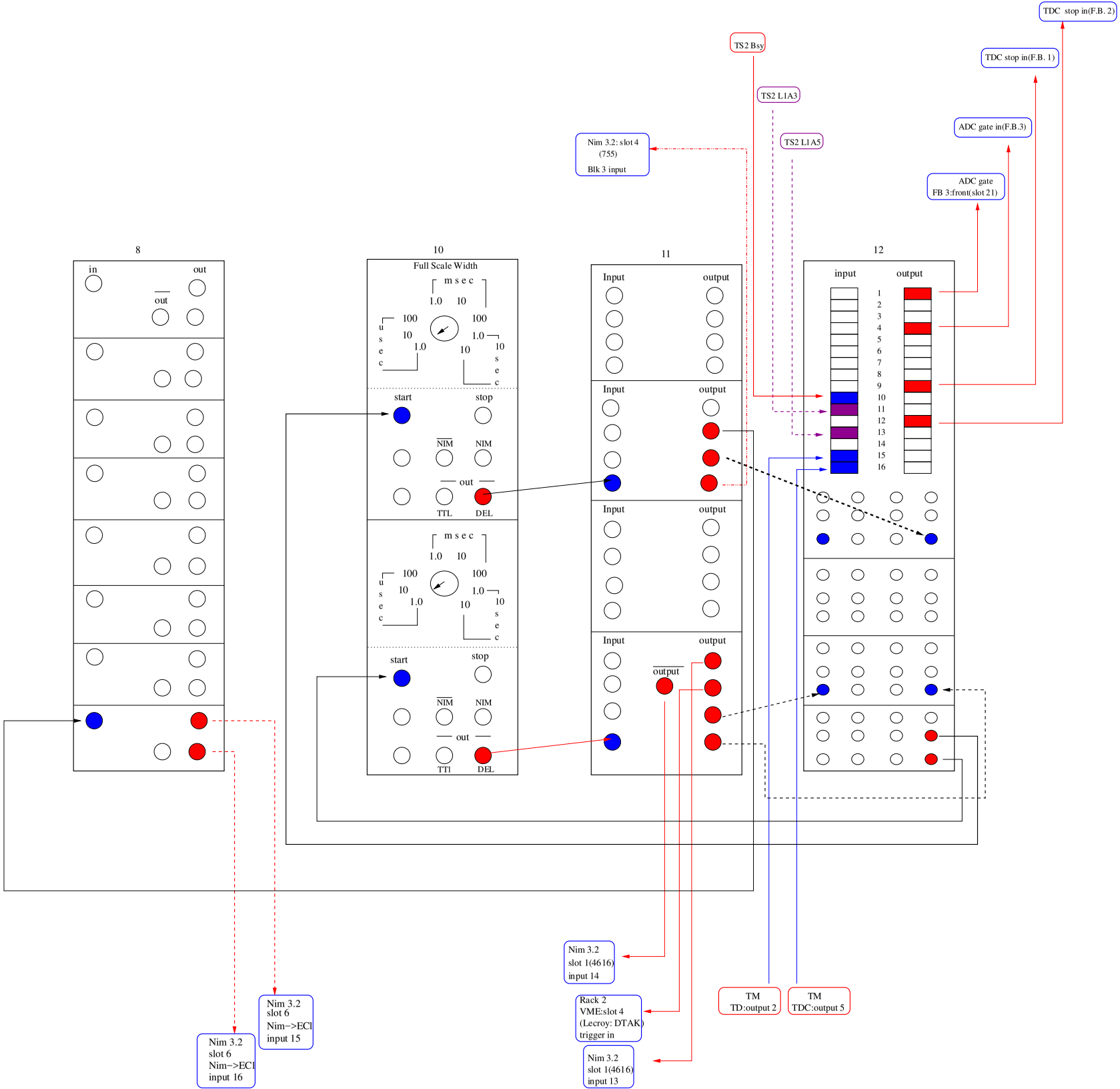
TDC stop in(F.B. 2)
TS2 Bsy
TDC stop in(F.B. 1)
TS2 L1A3
ADC gate in(F.B.3)
Nim 3.2: slot 4 (755) Blk 3 input
TS2 L1A5
ADC gate FB 3:front(slot 21)
8
in
out
10
Full Scale Width
m s e c
u s e c
start
stop
NIM
out
TTL
DEL
11
Input
output
12
input
output
Nim 3.2 slot 1(4616) input 14
Rack 2 VME:slot 4 (Lecroy: DTAK) trigger in
Nim 3.2 slot 1(4616) input 13
TM TD:output 2
TM TDC:output 5
Nim 3.2 slot 6 Nim->ECl input 15
Nim 3.2 slot 6 Nim->ECl input 16